ERIE COUNTY WATER AUTHORITY
INTEROFFICE MEMORANDUM

July 12, 2021

TO: Terrence McCracken, Secretary to the Authority
Mark S. Carney, Esq., Attorney

FROM: Steven W. Denzler, P.E., LEED BD&C SWD

SUBJECT: Highway Rehabilitation Project, NY Route 78 Transit Rd
From French Rd to Wehrle Dr, NY Route 33 Genesee St
Erie County
PIN 5813.61, D264571
ECWA File No.: HWNY-888-1901
ECWA Proj. No.: 201900110

The attached referenced documents are prepared by the New York State Department of Transportation (NYSDOT) because they will be performing roadway improvements that will impact ECWA facilities. NYSDOT will be relocating and adjusting valve box elevations and waterline as a part of this project. The NYSDOT will do the identified adjustments to ECWA facilities at no cost to the Authority. The HC 140 and Certified Resolution will confirm the process.

Attached are four (4) copies of the NYSDOT HC 140 form for the above project. A Certified Resolution (4 copies) by the Board and signature of the appropriate Authority Official are required. Four (4) copies of the HC 140 and Certified Resolution are to be returned with original signatures and seals affixed to the NYSDOT per the cover letter. The NYSDOT is requesting return of the documents by August 4, 2021.

The HC 140 references two items that must be included in the ECWA Board Resolution:

"Granting the State of New York authority to perform the adjustment for the owner" and **"agreeing to maintain facilities adjusted via State-let contract**."

(The specific reference is identified in Section VI of the HC140, page 4 of 4.)

If there are any questions, please contact me.

SWD: med

P:\HWNY\P201900110\Memo01.docx

ERIE COUNTY WATER AUTHORITY
AUTHORIZATION FORM
For Approval/Execution of Documents
(check which apply)

Contract: _____ **Project No.:** 201900110
Project Description: Highway Rehabilitation Project, NY Route 78 Transit Rd from French Rd To Wehrle Dr, NY Route 33 Genesee St, Various Towns & Villages, Erie County PIN 5813.61, D264571

Item Description:

- [ ] Agreement
- [ ] Professional Service Contract
- [ ] Amendment
- [ ] Change Order
- [ ] BCD
- [X] NYSDOT Agreement HC140
- [ ] Contract Documents
- [ ] Addendum
- [ ] Recommendation for Award of Contract
- [ ] Recommendation to Reject Bids
- [ ] Request for Proposals
- [ ] Other _____

Action Requested:

- [X] Board Authorization to Execute
- [X] Legal Approval
- [ ] Board Authorization to Award
- [ ] Execution by the Chairman
- [ ] Board Authorization to Advertise for Bids
- [ ] Execution by the Secretary to the Authority
- [ ] Board Authorization to Solicit Request for Proposals
- [ ] Other _____

Approvals Needed:

APPROVED AS TO CONTENT:

- [X] Sr Distribution Engineer _____ Date: 7/14/2021
- [X] Chief Operating Officer _____ Date: _____
- [X] Executive Engineer _____ Date: 07/13/2021
- [ ] Director of Administration _____ Date: _____
- [ ] Risk Manager _____ Date: _____
- [X] Chief Financial Officer _____ Date: 07/13/2021
- [X] Legal _____ Date: 7/13/2021

APPROVED FOR BOARD RESOLUTION:

- [X] Secretary to the Authority _____ Date: 07/14/21

Remarks: Adjustment of ECWA facilities (water valve box elevations and water line) under contract item.

Resolution Date: _____ **Item No:** _____

NEW YORK STATE OF OPPORTUNITY. | Department of Transportation

JUL 06 2021 10:45
ANDREW M. CUOMO
Governor

MARIE THERESE DOMINGUEZ
Commissioner

FRANK P. CIRILLO, SR/WA
Regional Director

June 30, 2021

Leonard F. Kowalski, P.E., Executive Engineer
Erie County Water Authority
3030 Union Road
Cheektowaga, New York 14227

RE: HIGHWAY REHABILITATION PROJECT, NY ROUTE 78 TRANSIT ROAD FROM FRENCH ROAD TO WEHRLE DRIVE, NY ROUTE 33 GENESEE STREET. TOWNS OF CLARENCE, CHEEKTOWAGA, LANCASTER, AND AMHERST. VILLAGE OF DEPEW PIN 5813.61, D264571

Dear Mr. Kowalski:

Enclosed is a copy of the proposed contract plans for the above-referenced project. The Erie County Water Authority has existing facilities within the project limits. The Erie County Water Authority's involvement in this project consists of relocation of adjustment of valve box elevations and water line. The details of the adjustment are shown on the project plans included with this letter.

Also enclosed are four (4) sets of documents, including the Utility Work Agreement (HC-140) and the Coordination Note. Each of the four (4) HC-140 forms must be duly approved by an authorized representative of the Erie County Water Authority. **Work included in the State's contract and performed by the State contractor will be done at no expense to the Erie County Water Authority.**

This agreement also requires four (4) copies of a Certified Resolution by your governing body as stated in Section VI – References of the Utility Work Agreement (HC-140). Each copy must be signed and have a seal affixed to it.

Enclosed is a sample of a Certified Resolution granting the State of New York authority to perform the facility adjustments per contract documents, agreeing to maintain facilities, and authorizing a municipal official to enter agreements with the State of New York.

Please return four (4) physical original sets of the signed agreement with the Coordination Note and Certified Resolution to Ronald Rolling, Regional Utilities Engineer at 100 Seneca Street, Buffalo, NY 14203. The documents sent electronically are to be returned by **August 4, 2021.** One (1) copy of the fully-executed agreement will be returned for your records.

Any questions regarding work to be done may be directed to Robert Schaller, Design Job Manager (DJM), at (716) 847-3043 or via e-mail at Robert.Schaller@dot.ny.gov. Questions regarding these forms can be directed to Mr. Ronald Rolling, Regional Utilities Engineer, at (716) 847-3954 or via e-mail at Ronald.Rolling@dot.ny.gov.

Sincerely,

Renjit P. James
Acting Assistant Regional Design Engineer

By: Ronald Rolling
Ronald W. Rolling, P.E.
Regional Utilities Engineer

RPJ/RWR/EJC/AJP/jlg
Enclosures: Project Plans, Utility Work Agreement (HC-140), Coordination Note, and Certified Resolution Sample

NEW YORK STATE DEPARTMENT OF TRANSPORTATION
UTILITY WORK AGREEMENT

Since the construction, reconstruction, or maintenance of the transportation project described below, identified as:

Project Identification No.: 5813.61	F.A. Project No.:
ROW Declaration No.:	Map Nos.:
Parcel Nos.:	County of Erie
Contract No.: D26	

Project Description: Highway Rehabilitation Project, NY Route 78 Transit Road from French Road to Wehrle Drive, NY Route 33 Genesee Street.
Towns of Clarence, Cheektowaga, Lancaster, and Amherst. Village of Depew

State – Municipality, Reimbursable by Items and Labor Exchange (ILE)

necessitates the adjustment of utility facilities as hereinafter described, the owner, **Erie County Water Authority**, of said facilities herewith agrees with the State of New York acting through the Commissioner of Transportation that this agreement shall apply to the accommodation of these utility facilities. Any adjustment of said facilities will be accomplished under the terms of this agreement, in accordance with the Rules and Regulations Governing the Accommodation of Utilities within the State Highway Right-of-Way, in compliance with the attached Special Note, "Coordination with the Utility Schedule", and in accordance with the contract plans, specifications, proposal, amendment(s) or change order(s).

I. Existing Facilities (describe type, size, capacity, location, etc.)

Erie County Water Authority has existing water lines, and fire hydrants within the highway boundary of NY 78 (Transit Rd) and NY 33 (Genesee St.)

presently located on **NY State Right-of-Way** as shown on the plans for the proposed transportation project are to be adjusted as follows: (describe type, size, capacity, location, etc.)

1. Adjustment of valve box elevations.
2. Relocation of water line where it conflicts with proposed drainage.

per contract documents

for an estimated $ N/A

NEW YORK STATE DEPARTMENT OF TRANSPORTATION
UTILITY WORK AGREEMENT

II. Financial Responsibility (check appropriate boxes):

☐ The facilities to be adjusted under the terms of this agreement are subject to Section 52 of the State Highway Law, and the cost of this adjustment is the sole responsibility of the owner.

☒ Subdivision 24 of Section 10 of the State Highway Law enables the Commissioner of Transportation to provide, at the expense of the State, for adjustment to a municipally owned utility when such work is necessary as a result of State highway work. (Municipal Agreement if required.)

☐ Subdivision 24-b of Section 10 of the State Highway Law enables the Commissioner of Transportation to participate in the necessary expenses incurred for adjustment of privately, publicly, or cooperatively owned facilities, municipal utility facilities, or facilities of a corporation organized pursuant to the State Transportation Corporations Law. (Privately Owned Property Agreement or Reimbursement Agreement required.)

☐ Subdivision 27 of Section 10 of the State Highway Law enables the Commissioner of Transportation, upon the request of a municipality, to perform for and at the expense of such municipality specified work to be included within a State-let contract. (Betterment Resolution required.)

☐ Subdivision 33 of Section 10 of the State Highway Law enables the Commissioner of Transportation, upon the request of a public utility corporation, to perform for and at the expense of such public utility corporation specified work to be included within a State-let contract.

☐ Subdivision 13 of Section 30 of the State Highway Law enables the Commissioner of Transportation to enter into an agreement to reimburse with public funds the owner for necessary expenses incurred as a result of this adjustment, or to replace the facilities in kind.

☐ The owner will develop and keep a record of costs in accordance with the New York State Department of Transportation (NYSDOT) Reimbursement Procedures, and when federal funds participate in the cost, the Federal Highway Administration (FHWA) Federal-Aid Policy Guide Part 645, or as indicated below:

_____

_____

_____

_____

_____

NEW YORK STATE DEPARTMENT OF TRANSPORTATION
UTILITY WORK AGREEMENT

III. Physical Adjustment Method (check appropriate boxes):

The actual adjustment or design engineering will be performed by the following method (s):

☒ Contract let by the Commissioner.

☐ Contract let by the Owner. (check applicable statement, i.e., a or b)

☐ a. Best Interests of State.

☐ b. Utility not sufficiently staffed or equipped.

☐ By the Owner's forces.

IV. Betterment, Salvage, and Depreciation Credits Due the Project (check appropriate boxes):

☒ There will be no extension of service life, improved capacity, nor any other betterment of the facility (as defined by the NYSDOT Utility Reimbursement Procedures and by FHWA Federal-Aid Policy Guide Part 645) as a result of the adjustments made pursuant to this agreement.

☐ There is betterment described as follows:

_____

_____

☐ The owner will not claim reimbursement for that betterment portion of the work, but will duly account for it as required by applicable NYSDOT and FHWA procedures.

☐ The owner hereby agrees to deposit with the Comptroller of the State of New York the amount of $_____ to cover the cost of the betterment as described above.

☐ The owner agrees to comply with the requirements of the NYSDOT Utility Reimbursement Procedure and FHWA Federal-Aid Policy Guide Part 645 with the respect to salvage and depreciation credits when applicable.

V. General Covenants

The owner hereby agrees to accept full title and responsibility for the adjusted facility in writing upon satisfactory completion of the work. Such acceptance will acknowledge the owner's responsibility to maintain the facility in accordance with all applicable codes, standards and regulations, including his obligation, where applicable, to remove any or all of the facility from the highway at the order of the Commissioner of Transportation, all in accordance with the Rules and Regulations Governing the Accommodation of Utilities within the State Highway Right-of-Way. All compensable claims covered by this agreement will be included in one of the following:

A. Privately Owned Property Agreement executed prior to the performance of the work.
B. Municipal Agreement executed prior to performance of the work.
C. Reimbursement Agreement executed prior to performance of the work.
D. Such other agreement as approved by NYSDOT Office of Legal Affairs.

NEW YORK STATE DEPARTMENT OF TRANSPORTATION
UTILITY WORK AGREEMENT

VI. References

The following documents are herewith incorporated in this agreement be reference (check appropriate boxes)

☒ Federal Highway Administration's Federal-Aid Policy Guide Part 645.

☒ Contract documents: Contract Number D26

PIN: 5813.61

Plan Sheets No.: Electronic copy of the proposed contract plans

☐ Owner's Plan Sheets _____

☐ Owner's Estimate Sheets Form No. FIN 223c

☒ Resolution dated _____, by _____

☒ Granting the State of New York authority to perform the adjustment for the owner.

☒ Agreeing to maintain facilities adjusted via State-let contract.

☐ Authorizing deposit of funds by the owner.

☒ Certification by the owner or his agent that he has the legal authority to enter into this agreement.

_____

(Print/Type Name) Owner or Agent (Signature) Title Date

Statewide Utilities Engineer

Arvind K. Salgam, P.E. Title Date
For the NYSDOT Commissioner of Transportation

SPECIAL NOTE

COORDINATION WITH THE UTILITY SCHEDULE

The contractor must coordinate their schedule of operations with the various utility owners involved with the project and shall verify utility information found in the contract documents. Utility revisions required by the various utility owners in connection with this project include:

Erie County Water Authority

Utility Owner's Field Contact:
Leonard F. Kowalski, P.E., Executive Engineer
Erie County Water Authority
3030 Union Road
Cheektowaga, New York 14227
D: (716) 685-8220
O: (716) 684-1510
C: (716) 341-1137
F: (716) 684-8397
lkowalski@ecwa.org

The Erie County Water Authority has existing waterlines within the highway boundary of NY 78 (Transit Rd.).

Reimbursable work to be done by the State's contractor:

The project requires the following work to be done at this location, per details in the contract documents:

Adjustment of valve box cover elevations.

The work is to be done by the State's contractor and paid by contract items.

The State's Engineer-In-Charge, in coordination with the State's contractor, shall notify the Erie County Water Authority in writing **2 weeks** before commencing work on their facilities at each location and for each occurrence of work.

The State's Engineer-In-Charge will provide record plans to the Erie County Water Authority.

Additional Notes

1. The Contractor is governed by and must adhere to the provisions of 16 NYCRR Part 753 (Protection of Underground Facilities).
2. In addition to the above-itemized facility adjustments, other adjustments may become necessary during the construction phase as a result of more precise location data or other changes that might develop.
3. The Standard Specifications shall apply to all utility facility adjustments.

4. Any additional adjustments shall be performed by the utility owners and/or the State's contractor upon direction by the State's Engineer-In-Charge.
5. Suitable time frames for additional adjustments shall be coordinated between the State's Engineer-In-Charge, the State's contractor, and the affected utility owners. Such timeframes shall not be included within previously established timeframes.

END OF COORDINATION WITH THE UTILITY SCHEDULE

Revised 2020 April 27

Resolution Granting the State of New York Authority to Perform the Adjustment for the Owner and Agreeing to Maintain Facilities Adjusted Via State-let Contract

RESOLUTION

Resolution # _____

WHEREAS, the New York State Department of Transportation proposes the construction, reconstruction, or improvement of state project name from cover letter in the name of municipality located in county name county, PIN enter PIN, and

WHEREAS, the State will include as part of the construction, reconstruction, or improvement of the above mentioned project the work to be done pursuant to Section 10, Subdivision 24, of the State Highway Law, as shown on the contract plans relating to the project and meeting the requirements of the owner, and

WHEREAS, the service life of the relocated and or replaced utilities has not been extended, and

WHEREAS, the State will provide for the reconstruction of the above mentioned work, as shown on the contract plans relating to the above mentioned project.

NOW, THEREFORE,

BE IT RESOLVED: That the name of municipality approves of the work to be done and the above mentioned work performed on the project and shown on the contract plans relating to the project and that the name of municipality will maintain or cause to be maintained the adjusted facilities performed as above stated and as shown on the contract plans.

BE IT FURTHER RESOLVED: that name has the authority to sign, with the concurrence of the board, any and all documentation that may become necessary as a result of this project as it relates to the name of municipality, and

BE IT FURTHER RESOLVED: That the clerk of the name of municipality is hereby directed to transmit five (5) certified copies of the foregoing resolution to the New York State Department of Transportation.

Moved By:
Seconded By:
Vote:

****

I, , duly appointed and qualified , do hereby CERTIFY that the foregoing resolution was adopted at a meeting duly called and held in the office of, , a quorum being present on the day of , and that said copy is a true, correct and compared copy of the original resolution so adopted and that the same has not been revoked or rescinded.

WITNESSETH, my hand and seal this day of .

_____

Name, title

Instructions: fill in the red prompts with information from the cover letter.

Sample Only

D264571

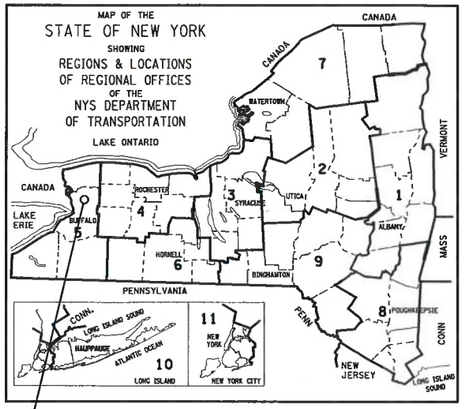

PROJECT LOCATION

NEW YORK STATE OF OPPORTUNITY. | Department of Transportation

THE LATEST REVISIONS OF THE STANDARD SHEETS MAINTAINED BY THE DEPARTMENT, WHICH ARE CURRENT ON THE DATE OF ADVERTISEMENT FOR BIDS, SHALL BE CONSIDERED TO BE IN EFFECT. ALL PAY ITEMS AND WORK CONTAINED IN THE CONTRACT AND ANY ADDITIONAL PAY ITEMS AND WORK ENCOUNTERED DURING THE COURSE OF THE CONTRACT SHALL BE SUBJECT TO THE APPLICABLE STANDARD SHEET(S) UNLESS OTHERWISE SPECIFIED IN THE CONTRACT DOCUMENTS.

ALL WORK CONTEMPLATED UNDER THIS CONTRACT IS TO BE COVERED BY AND IN CONFORMITY WITH THE STANDARD SPECIFICATIONS (US CUSTOMARY) REFERENCED IN THE CONTRACT PROJECT "PROPOSAL" EXCEPT AS MODIFIED BY THESE PLANS OR BY CHANGES SET FORTH IN THE CONTRACT PROJECT "PROPOSAL."

CONTRACT PLANS HAVE BEEN DESIGNED IN ACCORDANCE WITH NYSDOT POLICIES AND GUIDELINES AND THE FINAL DESIGN REPORT APPROVED ON 10/30/2020

INTERSECTION WIDENING AND HIGHWAY REHABILITATION PROJECT
NY ROUTE 78 (S.H. 1334-A-1) TRANSIT ROAD
A LENGTH OF 2.63 MILES
TOWNS OF CHEEKTOWAGA, LANCASTER, CLARENCE,
AMHERST AND VILLAGE OF DEPEW

F.A. PROJECT

CONTRACT: D264571

ERIE COUNTY: ERIE

CONTRACTOR'S NAME _____

AWARD DATE _____

COMPLETION DATE _____

FINAL ACCEPTANCE DATE _____

REGIONAL DIRECTOR _____

ENGINEER IN CHARGE _____

FINAL COST TOTAL _____

FISCAL SHARE COST(S)

CERTIFICATION PENDING VERIFICATION

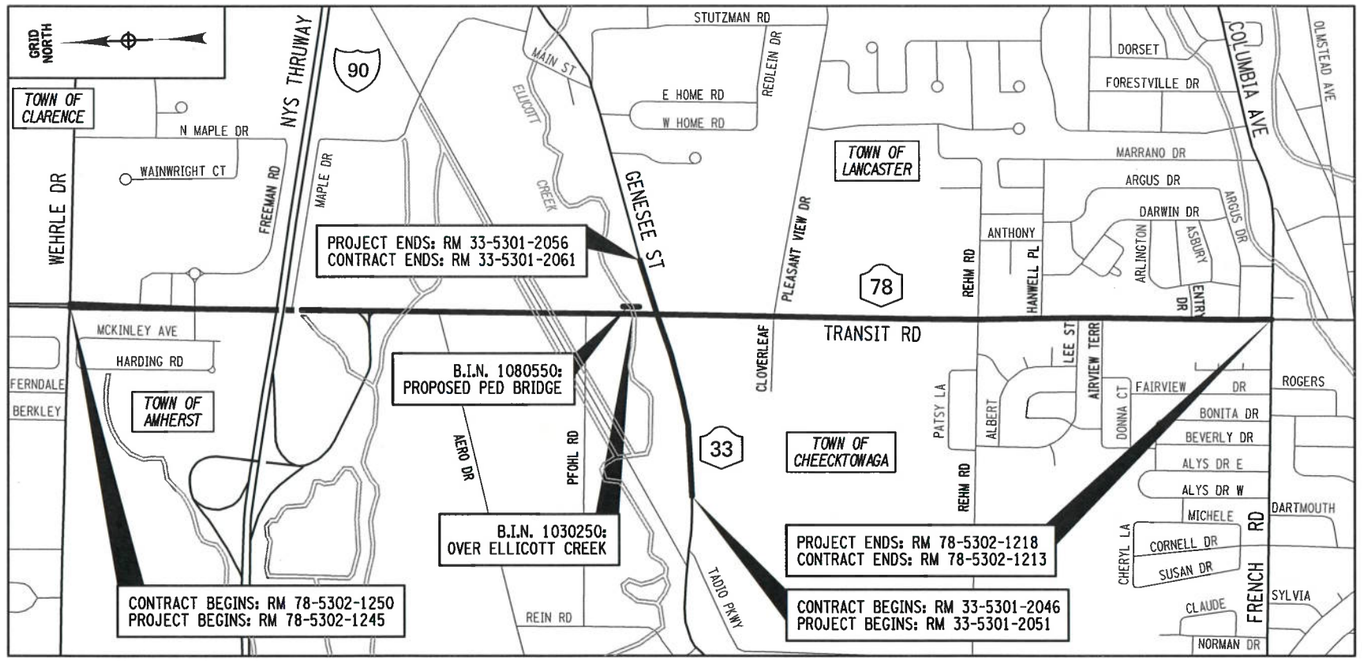

PROJECT LOCATION
NY ROUTE 78 FROM WEHRLE DR TO FRENCH RD, TOWNS OF AMHERST, CLARENCE, CHEEKTOWAGA, LANCASTER & VILLAGE OF DEPEW, ERIE COUNTY
(TRANSIT RD.) ROUTE MARKER 78-5302-1218 TO ROUTE MARKER 78-5302-1245
(GENESEE ST.) ROUTE MARKER 33-5301-2051 TO ROUTE MARKER 33-5301-2056

APPROVED BY	RECOMMENDED BY	RECOMMENDED BY	RECOMMENDED BY	APPROVED BY
06/22/2021	6/24/21	6/23/21	6/23/21	6/24/2021
REGIONAL DESIGN ENGINEER	REGIONAL CONSTRUCTION ENGINEER	ACTING REGIONAL DIRECTOR OF OPERATIONS	REGIONAL TRAFFIC ENGINEER	REGIONAL DIRECTOR
SANJYOT S. VAIDYA, P.E.	DANIEL W. PASKIE, P.E.	JOHN S. COGSWELL, P.E	MICHAEL J. ROCHE, P.E.	FRANK P. CIRILLO SR/WR
DATE	DATE	DATE	DATE	DATE

NY ROUTE 78, TRANSIT ROAD, S.H. 1334-A-1		
FRENCH ROAD TO WEHRLE DRIVE		
TOWNS OF CHEEKTOWAGA, LANCASTER, CLARENCE,		
AMHERST & VILLAGE OF DEPEW		
COUNTY: ERIE		
FED. ROAD REG. NO.	STATE	SHEET NO.
1	N.Y.	1
CAPITAL PROJECT IDENTIFICATION NO. 5813.61		

INDEX ON SHEET NO. 2

PROJECT MANAGER
CHECK
DRAFTING
CHECK
DESIGN
JOB MANAGER
DESIGN SUPERVISOR

FILE NAME = 581361_CPH_HWY_COV-1.dgn
DATE/TIME = 23-JUN-2021 15:33
USER = ccHYes

D264571

ALIGNMENT

ABBR.	DESCRIPTION
AH	AHEAD
AZ	AZIMUTH
BK	BACK
℄	BASELINE
BRG	BEARING
℄	CENTERLINE
CS	CURVE TO SPIRAL
e	SUPERELEVATION RATE (CROSS SLOPE)
EQ	EQUALITY
EXT	EXTERNAL
HCL	HORIZONTAL CONTROL LINE
HSD	HEADLIGHT SIGHT DISTANCE
L	LENGTH OF CIRCULAR CURVE
LS	LENGTH OF SPIRAL
LVC	LENGTH OF VERTICAL CURVE
E	CENTER CORRECTION OF VERTICAL CURVE
ML	MAIN LINE
PC	POINT OF CURVATURE
PI	POINT OF INTERSECTION
POL	POINT ON LINE
PSD	PASSING SIGHT DISTANCE
PT	POINT OF TANGENT
PVC	POINT OF VERTICAL CURVE
PVI	POINT OF VERTICAL INTERSECTION
PVT	POINT OF VERTICAL TANGENT
R	RADIUS
SC	SPIRAL TO CURVE
SSD	STOPPING SIGHT DISTANCE
ST	SPIRAL TO TANGENT
STA	STATION
T	TANGENT LENGTH
TGL	THEORETICAL GRADE LINE
TS	TANGENT TO SPIRAL
VC	VERTICAL CURVE

TOPOGRAPHY (DRAINAGE)

ABBR.	DESCRIPTION
BB	BOTTOM OF BANK (STREAM)
BC	BOTTOM OF CURB
BO	BOTTOM OF OPENING
CAP	CORRUGATED ALUMINUM PIPE
CB	CATCH BASIN
CIP	CAST IRON PIPE
℄ STRM	CENTERLINE OF STREAM
CMP	CORRUGATED METAL PIPE
CP	CONCRETE PIPE
CSP	CORRUGATED STEEL PIPE
CULV	CULVERT
DIA	DIAMETER
DMH	DRAINAGE MANHOLE
DS	DRAINAGE STRUCTURE PIPE
D'XING	DITCH CROSSING
EHW	EXTREME HIGH WATER
EL	ELEVATION
ELEV	ELEVATION
ELW	EXTREME LOW WATER
ES	END SECTION
HW	HEADWALL
INV	INVERT
MH	MANHOLE
MHW	MEAN HIGH WATER
OHW	ORDINARY HIGH WATER
OLW	ORDINARY LOW WATER
RCP	REINFORCED CONCRETE PIPE
SICPP	SMOOTH INTERIOR CORRUGATED POLYETHYLENE PIPE
TB	TOP OF BANK (STREAM)
TC	TOP OF CURB
TG	TOP OF GRATE
VCP	VITRIFIED CLAY PIPE

TOPOGRAPHY (MISCELLANEOUS)

ABBR.	DESCRIPTION
ABUT	ABUTMENT
AOBE	AS ORDERED BY ENGINEER
ASPH	ASPHALT
BDY	BOUNDARY
BLDG	BUILDING
BM	BENCH MARK
CC	CENTER TO CENTER
CONC	CONCRETE
CONST	CONSTRUCTION
CR	COUNTY ROAD
D	DEED DISTANCE
DM	DIRECT MEASUREMENT
DWY	DRIVEWAY
EP	EDGE OF PAVEMENT
ES	EDGE OF SHOULDER
FEE	FEE ACQUISITION
FEE WO/A	FEE ACQUISITION WITHOUT ACCESS
FP	FENCE POST
FD	FOUNDATION
FL	FENCE LINE
GAR	GARAGE
GR	GRAVEL
HO	HOUSE
HWY	HIGHWAY
IP	IRON PIN OR IRON PIPE
MB	MAILBOX
MON	MONUMENT
N&W	NAIL AND WASHER
OG	ORIGINAL GROUND
O/H	OVERHEAD
P	PARCEL
PAV'T	PAVEMENT
PE	PERMANENT EASEMENT
PED POLE	PEDESTRIAN POLE
PL	PROPERTY LINE
POR	PORCH
RR	RAILROAD
RTE	ROUTE
ROW	RIGHT OF WAY
RW	RETAINING WALL
SH	STATE HIGHWAY
SHLDR	SHOULDER
SPK	SPIKE
ST	STREET
STK	STAKE
STY	STORY
SW	SIDEWALK
TE	TEMPORARY EASEMENT
TO	TEMPORARY OCCUPANCY
U/G	UNDERGROUND
WW	WING WALL

UTILITIES

ABBR.	DESCRIPTION
E	ELECTRIC
EMH	ELECTRIC MANHOLE
G	GAS
GP	GUY POLE
GSB	GAS SERVICE BOX (HOUSE LINE)
GV	GAS VALVE (MAIN LINE)
HYD	HYDRANT
LP	LIGHT POLE
LPG	LOW PRESSURE GAS
PP	POWER POLE
SA	SANITARY SEWER
SMH	SANITARY MANHOLE
ST	STORM SEWER
T	TELEPHONE
TCB	TRAFFIC CONTROL BOX
TELBOX	TELEPHONE BOX
TEL P	TELEPHONE POLE
TMH	TELEPHONE MANHOLE
CTV	CABLE TELEVISION
W	WATER
WSB	WATER SERVICE BOX (HOUSE LINE)
WV	WATER VALVE (MAIN LINE)

SUBSURFACE EXPLORATION

ABBR.	DESCRIPTION
REPLACE ABBREVIATION "AB" WITH:	
AH	HAND AUGER
CP	CONE PENTROMETER
DA	2¼ INCHES CASED DRILL HOLE
DM	DRILLING MUD
DN	4 INCHES CASED DRILL HOLE
FH	HOLLOW FLIGHT AUGER
PA	POWER AUGER
PH	PROBE
PT	PERCOLATION TEST HOLE
RP	1 INCH SAMPLER (RETRACTABLE PLUG)
	TO BE DEFINED AT THE TIME OF EXPLORATION
SP	SEISMIC POINT
TP	TEST PIT
ABBREVIATION "C" IN CATEGORIES: DA, DM, DN, AND FH WITH:	
B	BRIDGE
C	CUT
D	DAM
F	FILL
K	CULVERT
W	WALL
X	TO BE USED IF ONE OF THE ABOVE CANNOT BE DEFINED AT THE TIME THE EXPLORATION IS MADE

STANDARD SYMBOL (PLANS)	ITEM PAYMENT UNIT: ESTIMATE OF QUANTITIES SHEET	EQUIVALENT NOMENCLATURE: (SPECS/PROPOSAL)
"	-	INCHES
'	LF	LINEAR FEET
mi	MI	MILES
ft^2	SF	SQUARE FEET
YD^2	SY	SQUARE YARD
AC	AC	ACRES
YD^3	CY	CUBIC YARD
GAL	GAL	GALLON
lb	LB	POUND
TON	TON	TON

INDEX

TOTAL NUMBER OF SHEETS: 371

SHEET NUMBER	DESCRIPTION	DRAWING NUMBER
1	TITLE SHEET	COV-1
2	INDEX & ABBREVIATIONS	IND-1
3-4	LEGEND, LINE & POINT SYMBOLOGY	LEG-1 TO LEG-2
5-14	TYPICAL SECTIONS	TYP-1 TO TYP-10
15-16	GENERAL NOTES	GNN-1 TO GNN-2
17	WORK ZONE NOTES	WZN-1
18-23	WORK ZONE TYPICAL SECTIONS	WZTS-1 TO WZTS-6
24-48	WORK ZONE TRAFFIC CONTROL PLANS (PHASE 1 THRU 6B)	WZ1-1 TO WZ6B
49-56	WORK ZONE TYPICALS	WZT-1 TO WZT-8
57-61	BASELINE TIES	BLT-1 TO BLT-5
62-71	ALIGNMENT PLANS	ALN-1 TO ALN-10
72-75	ALIGNMENT TABLES	ALN-T1 TO ALN-T4
76	MAINTENANCE JURISDICTION PLAN	MJT-1
77-93	MISCELLANEOUS TABLES	MST-1 TO MST-17
94	MISCELLANEOUS DETAILS	MSD-1
95-96	GUIDERAIL PLANS	GRP-1 TO GRP-2
97-98	EARTHWORK SUMMARY SHEETS	ESS-1 TO ESS-2
99-125	GENERAL PLANS	GNP-1 TO GNP-27
126	SIGN DETAILS	SGD-1
127-154	SIGNAGE PLANS	SP-1 TO SP-27
155-161	SIGN DATA SHEETS	SDS-1 TO SDS-7
162	TRAFFIC SIGNAL DETAILS	TSD-1
163-217	TRAFFIC SIGNAL PLANS	TSP-1 TO TSP-55
218	LANDSCAPE ENVIRONMENTAL NOTES	LEN-1
219-222	LANDSCAPE ARCHITECTURE TABLES	LAT-1 TO LAT-4
223	STORMWATER POND DREDGE PLAN	SWP-01
224	CURB RAMP NOTES & DETAILS	CRN-1
225	CURB RAMP TABLE	CRT-1
226-248	CURB RAMP PLANS	CRP-1 TO CRP-23
249-275	STRIPING PLANS	STP-1 TO STP-27
276-278	UTILITY TABLES	UTT-1 TO UTT-3
279-305	UTILITY PLANS	UTL-1 TO UTL-27
306-307	WATERLINE NOTES & TABLES	WLNT-1 TO WLNT-2
308-309	WATERLINE PLANS & PROFILES	WLP-1 TO WLP-2
310-315	WATERLINE DETAILS	WLD-1 TO WLD-6
316-320	DRAINAGE TABLES	DTB-1 TO DTB-5
321-323	DRAINAGE DETAILS	DDT-1 TO DDT-3
324-350	DRAINAGE PLANS	DRN-1 TO DRN-27
351-363	PEDESTRIAN BRIDGE PLANS - B.I.N. 1080550	ST1-01 TO ST1-13
364-371	BRIDGE PLANS - B.I.N. 1030250	ST2-01 TO ST2-08

LIST OF STANDARD SHEETS

203-02	606-04	611-01	619-30	625-01	663-02	680-05	680-17
203-04	606-06	619-02	619-31	645-01	663-03	680-06	685-01
203-05	606-14	619-04	619-41	645-03	663-04	680-07	
209-02	606-25	619-10	619-50	645-14	663-05	680-08	
209-03	607-04	619-11	619-51	655-01	663-06	680-10	
209-05	608-01	619-12	619-60	655-04	663-07	680-11	
402-01	608-03	619-20	619-61	655-06	680-01	680-12	
603-01	609-02	619-21	619-63	655-07	680-03	680-13	
604-02	609-03	619-22	619-64	663-01	680-04	680-14	

NY 78, TRANSIT ROAD, S.H. 1334-A-1
FRENCH ROAD TO WEHRLE DRIVE
TOWNS OF CHEEKTOWAGA & LANCASTER
VILLAGE OF DEPEW
COUNTY: ERIE REGION: 05

PIN 5813.61
NY 78

BRIDGES

CULVERTS

ALL DIMENSIONS IN ft UNLESS OTHERWISE NOTED

INDEX & ABBREVIATIONS

CONTRACT NUMBER
D264571

DRAWING NO. IND-1
SHEET NO. 2

NEW YORK STATE OF OPPORTUNITY. Department of Transportation

PROJECT MANAGER S. S. VAIDYA
CHECK R. F. SCHALLER
DRAFTING C. L. CRITES
CHECK R. F. SCHALLER
DESIGN C. L. CRITES
JOB MANAGER R. F. SCHALLER
DESIGN SUPERVISOR S. S. VAIDYA

FILE NAME = 581361_CPH_HWY_IND-1.dgn
DATE/TIME = 22-JUN-2021 13:20
USER = ccrites

ALIGNMENT

STYLE	NAME	DESCRIPTION
	AC	CONTROL (CENTERLINE)
	AD_P	DETOUR
	AT_P	TRANSITION CONTROL

BRIDGE

STYLE	NAME	DESCRIPTION
	BR	RAIL
	BSHT	SHEET PILING

CONTROL

STYLE	NAME	DESCRIPTION
	CB	BASELINE
	CBPR	BASELINE, PROJECTION

DRAINAGE

STYLE	NAME	DESCRIPTION
ST	DCP	CULVERT PIPE
ST	DCP_P	CULVERT PIPE (DIR)
	DDG_P	DITCH, GRASS LINED
	DDP_P	DITCH, PAVED INVERT
	DDS_P	DITCH, STONE LINED
	DFL_P	FLOW LINE
	DSSD	SLOTTED DRAIN
UD	DUD_P	UNDERDRAIN

ENVIRONMENTAL

STYLE	NAME	DESCRIPTION
FL	EBLHS	BALE, STRAW
	ECT	CURTAIN, TURBIDITY
	EDMC	DAM, COFFER
	EDMEC_P	DAM, EARTHEN CHECK
	EDMGSC_P	DAM, GRAVEL BAG/SAND BAG CHECK
	EDMPC_P	DAM, PREFABRICATED CHECK
	EDMSC_P	DAM, STONE CHECK
	EFNS	FENCE, SILT
	EFNSV	FENCE, SILT & VEGETATION
	EFNV	FENCE, VEGETATION
AA	EWAA_P	WETLAND, ADJACENT AREA
FW	EWF	WETLAND, FEDERAL
FW SW	EWFS	WETLAND, FEDERAL AND STATE
SW	EWM	WETLAND, MITIGATION AREA
SW	EWS	WETLAND, STATE

LANDSCAPE

STYLE	NAME	DESCRIPTION
	LABL	AREA, BRUSH LINE
	LAHR	AREA, HEDGE ROW
	LAPB	AREA, PLANTING BED
	LAWA	AREA, WOODED AREA OUTLINE
	LAWE	AREA, WATERS EDGE
	LCUT_P	CUT LIMIT
	LFILL_P	FILL LIMIT
	LFNC	FENCE
	LTRC	TREE ROW, CONIFEROUS
	LTRD	TREE ROW, DECIDUOUS
	LWH	WALL, H PILE
	LWR	WALL, RETAINING
	LWS	WALL, STONE

ROW MAPPING

STYLE	NAME	DESCRIPTION
	MDL	DEED LINE
PE	MEE	EASEMENT, EXISTING
PE	MEP_P	EASEMENT, PERMANENT
APE	MEPA_P	EASEMENT, PERMANENT, APPROX.
TE	MET_P	EASEMENT, TEMPORARY
ATE	META_P	EASEMENT. TEMPORARY, APPROX.
FEE	MF_P	FEE ACQUISITION, W/ ACCESS
AFEE	MFA_P	FEE ACQUISITION, APPROXIMATE
	MFS_P	FEE ACQUISITION, SHAPE
FEE W/OA	MFWOA_P	FEE ACQUISITION, W/O ACCESS
	MHA	HISTORICAL, ACQUISITION
HB	MHB	HIGHWAY BOUNDARY
AHB	MHBA	HIGHWAY BOUNDARY, APPROX.
	MHBW	HWY BOUNDARY, FACE OF WALL
HB W/OA	MHBWOA	HIGHWAY BOUNDARY, W/O ACCESS
	MJC	JURISDICTION, CITY
	MJCY	JURISDICTION, COUNTY
	MJHD	JURISDICTION, HISTORIC DISTRICT
	MJLL	JURIS., (GREAT, MILITARY) LOT LINE
	MJN	JURISDICTION, NATION
	MJPB	JURISDICTION, PUBLIC LANDS
	MJS	JURISDICTION, STATE
	MJT	JURISDICTION, TOWN
	MJV	JURISDICTION, VILLAGE
	MPL	PROPERTY LOT LINE
	MPLA	PROPERTY LOT LINE, APPROXIMATE
	MSL	SUB LOT LINE

ROADWAY

STYLE	NAME	DESCRIPTION
CZ	RCZ_P	CLEAR ZONE
	RG	GUIDE RAIL, MISCELLANEOUS
	RGB	GUIDE RAIL, BOX BEAM
	RGBM	GUIDE RAIL, BOX BEAM, MEDIAN
	RGC	GUIDE RAIL, CABLE
	RGCB	GUIDE RAIL, CONCRETE BARRIER
	RGP_P	GUIDE POST
	RGW	GUIDE RAIL, W BEAM
	RGWM	GUIDE RAIL, W BEAM, MEDIAN
	RPB	PARKING BUMPER
	RRC	RAIL ROAD, CATENARY
3R	RRER	RAIL ROAD, 3RD RAIL
	RRPLS_P	RAIL, PHOTO, LARGE SCALE
	RRPSS	RAIL, PHOTO, SMALL SCALE
	RRS	RUMBLE STRIP
	RRSLS_P	RAIL, SURVEY, LARGE SCALE
	RRSSS	RAIL, SURVEY, SMALL SCALE

SIGNS

STYLE	NAME	DESCRIPTION
	SBLB	BILLBOARDS
	SM	MULTIPLE POST
	SSO	STRUCTURE, OVERHEAD
	SSOC	STRUCTURE, OVHD. CANTILEVER

STRIPING

STYLE	NAME	DESCRIPTION
	STB*	BROKEN LINE
	STDB*	DOUBLE BROKEN LINE
	STDL*	DOTTED LINE LONG
	STDS*	DOTTED LINE SHORT
	STFB*	FULL BARRIER LINE
	STH*	HATCH LINE
	STPB*	PARTIAL BARRIER LINE
	STRCT	ROUNDABOUT, CAT TRACKS
	STRYL	ROUNDABOUT, YIELD LINE
	STSB	STOP BAR
	STSE*	SOLID, EDGE
	STXL	X WALK, LADDER LINE
	STXLB	X WALK, LADDER BAR LINE

* = W (WHITE) OR Y (YELLOW)

TRAFFIC CONTROL

STYLE	NAME	DESCRIPTION
	TCSW	SIGNAL, SPAN WIRE

TRAFFIC WORK ZONE

STYLE	NAME	DESCRIPTION
	TWZBT_P	BARRIER, TEMPORARY
	TWZBTWL_P	BARRIER, TEMPORARY, W/ WARNING LIGHTS
	TWZCD_P	CHANNELIZING DEVICE
	TWZPMRC_P	PAVEMENT MARKING REMOVAL OR COVERING

UTILITIES

STYLE	NAME	DESCRIPTION
C	UC	CONDUIT, UNDERGROUND
]C[	UCH	CONDUIT, HANGING
OC	UCO	CONDUIT, OVERHEAD
E	UE	ELECTRIC LINE, UNDERGROUND
]E[	UEH	ELECTRIC LINE, HANGING
OE	UEO	ELECTRIC LINE, OVERHEAD
OET	UETO	ELECTRIC TRANSMISSION, OVERHEAD
	UESS	ELECTRIC, SUBSTATIONS
FO	UFO	FIBER OPTIC, UNDERGROUND
]FO[	UFOH	FIBER OPTIC, HANGING
OFO	UFOO	FIBER OPTIC, OVERHEAD
G	UG	GAS, UNDERGROUND
]G[	UGH	GAS, HANGING
OG	UGO	GAS, OVERHEAD
IC	UIC	INFORM CABLE, UNDERGROUND
]IC[	UICH	INFORM CABLE, HANGING
O	UO	OIL LINE, UNDERGROUND
]O[	UOH	OIL LINE, HANGING
	UPBP	POLE, BRACE, PUSH BRACE
	UPGW	POLE, GUY WIRE
SA	USA	SANITARY SEWER, UNDERGROUND
]SA[	USAH	SANITARY SEWER, HANGING
SAF	USAF	SANITARY SEWER, FORCE MAIN, UGND
]SAF[	USAFH	SANITARY SEWER, FORCE MAIN, HANG
T	UT	TELEPHONE, UNDERGROUND
]T[	UTH	TELEPHONE, HANGING
OT	UTO	TELEPHONE, OVERHEAD
CTV	UTV	CABLE TV, UNDERGROUND
]CTV[	UTVH	CABLE TV, HANGING
OCTV	UTVO	CABLE TV, OVERHEAD
UU	UUU	UNKNOWN, UNDERGROUND
]UU[	UUH	UNKNOWN, HANGING
OUU	UUO	UNKNOWN, OVERHEAD
W	UW	WATER LINE, UNDERGROUND
]W[	UWH	WATER LINE, HANGING
OW	UWO	WATER LINE, OVERHEAD

1. THE LEGEND ILLUSTRATES MAPPING FEATURES (EXISTING AND PROPOSED).
2. FEATURES ARE SHOWN AS EITHER LINEAR (ROADWAY GUIDERAIL, ROADWAY SIDEWALK, UTILITY LINES, ETC.) OR POINT (SIGN, UTILITY POLE, ETC.).
3. FEATURES SHOWN ON THE LEGEND AS EXISTING FEATURES ALSO HAVE CORRESPONDING PROPOSED FEATURES.
4. PROPOSED FEATURE SYMBOLOGY IS IDENTICAL TO EXISTING FEATURE SYMBOLOGY EXCLUDING LINE WEIGHT. LINE WEIGHT FOR PROPOSED FEATURES IS THICKER (0.015 in ON B SIZE DRAWINGS).
5. MAPPING FEATURES NOT INCLUDED ON THE LEGEND SHEET DO NOT HAVE A UNIQUE SYMBOLOGY (SUCH AS THE PAVEMENT EDGE, PAVEMENT EDGE OF TRAVEL WAY) AND SHOULD BE LABELED ON THE PLANS.
6. FEATURES SHOWN AT THE HEAVIER WEIGHT ARE PROPOSED ONLY AND DO NOT HAVE CORRESPONDING EXISTING FEATURES.

NY 78, TRANSIT ROAD, S.H. 1334-A-1 FRENCH ROAD TO WEHRLE DRIVE TOWNS OF CHEEKTOWAGA & LANCASTER VILLAGE OF DEPEW COUNTY: ERIE REGION: 05	PIN 5813.61 NY 78	BRIDGES	CULVERTS	ALL DIMENSIONS IN ft UNLESS OTHERWISE NOTED LEGEND - LINE SYMBOLOGY

CONTRACT NUMBER D264571

DRAWING NO. LEG-1

SHEET NO. 3

NEW YORK STATE OF OPPORTUNITY Department of Transportation

PROJECT MANAGER S. S. VAIDYA
CHECK R. F. SCHALLER
DRAFTING C. L. CRITES
DESIGN C. L. CRITES
CHECK R. F. SCHALLER
JOB MANAGER R. F. SCHALLER
DESIGN SUPERVISOR S. S. VAIDYA

FILE NAME = 581361_CPH_HWY_LEG-1.dgn
DATE/TIME = 22-JUN-2021 12:31
USER = crites

ALIGNMENT

CELL	NAME	DESCRIPTION
	ACC	CENTER OF CURVATURE
	ACOGO	COGO
	ACS	CURVE TO SPIRAL
	ADPI_P	DETOUR, POINT OF INTERSECT.
	ADPL_P	DETOUR, POINT ON LINE
	AEQN	EQUATION
	AEQNAHD	EQUATION AHEAD
	AEQNBK	EQUATION BACK
	AEVT	EVENT STATION
	APC	POINT OF CURVATURE
	APCC	POINT OF COMPOUND CURVATURE
	API	POINT OF INTERSECTION
	APOB	POINT OF BEGINNING
	APOC	POINT OF CURVATURE
	APOE	POINT OF END
	APOL	POINT ON LINE
	APOS	POINT ON SPIRAL
	APOT	POINT ON TANGENT
	APOVC	POINT ON VERTICAL CURVE
	APOVT	POINT ON VERTICAL TANGENT
	APORC	POINT ON REVERSE CURVE
	APT	POINT OF TANGENCY
	APVC	POINT OF VERTICAL CURVATURE
	APVCC	POINT OF VERT. CMPND CURVE
	APVI	POINT OF VERT. INTERSECTION
	APVRC	POINT OF VERT. REVERSE CURVE
	APVT	POINT OF VERTICAL TANGENCY
	ASC	SPIRAL TO CURVE
	ASPI	SPIRAL POINT OF INTERSECTION
	ASTS	SPIRAL TO SPIRAL
	AST	SPIRAL TO TANGENT
	ATS	TANGENT TO SPIRAL
	AVEVT	VERTICAL EVENT POINT
	AVHIGH	VERTICAL HIGH POINT
	AVLOW	VERTICAL LOW POINT

BRIDGE

	BSC	BRIDGE, SCUPPER

CONTROL

	CBP	BASELINE, POINT
	CBPOL	BASELINE, POINT ON LINE
	CBSP	BASELINE, SPUR POINT
	CBTP	BASELINE, TIE POINT
	CPBM	BENCHMARK
	CPH	POINT, HORIZ. PHOTOGRAMMETRY
	CPSM	POINT, SURVEY MARKER, PERM.
	CPSV	POINT, VERT., PHOTOGRAMMETRY

DRAINAGE

CELL	NAME	DESCRIPTION
	DINV	INVERT
	DS	STRUCTURE, RECTANGULAR
	DSI	STRUCTURE, INVERT
	DSM	STRUCTURE, MANHOLE
	DSMTXX_P	STRUCTURE, MANHOLE, TYPE "XX" "XX" = 48, 60, 72, 96
	DSR	STRUCTURE, ROUND
	DST"X"CB P	STRUCTURE, RECT., WITH CURB TYPE "X" "X" = F, G, N, O, P, R
	DST"X" P	STRUCTURE, RECT., TYPE "X" "X" = I, K, L, M, O, P, U

ENVIRONMENTAL

CELL	NAME	DESCRIPTION
CULV	EIOP_P	STR., INLET, OUTLET PROT.
GB	EIPGB_P	STR., INLET PROT., GRAVEL BAG
H/S	EIPHS_P	STR., INLET PROT., HAY/STRAW
PRFB	EIPP_P	STR., INLET PROT., PREFAB.
SF	EIPSF_P	STR., INLET PROT., SILT FENCE
	ERCB	RISER, CONCRETE BOX
	ETRS_P	TRAP, SEDIMENT
	EWFG	WETLAND FLAG

GEOTECHNICAL

	GDH	DRILL HOLE

LANDSCAPE

	LELS	ELEVATION, SPOT
	LFP	FLAG POLE
	LMB	MAILBOX
	LPB	PAPER BOX
	LPST	POST, SINGLE
	LRB	ROCK, BOULDER
	LSHC	SHRUB, CONIFEROUS
	LSHD	SHRUB, DECIDUOUS
	LTC	TREE, CONIFEROUS
	LTD	TREE, DECIDUOUS
	LTS	TREE, STUMP
	LTW P	TREE, WELL OR WALL
	LUKP	UNKNOWN POINT

ITS

CELL	NAME	DESCRIPTION
	IANT P	ANTENNAS
A	IASCTS	ACCOU. SPEED/COUNT SNSR.S
P	ICABPAD	CABINET & PAD
	ICCTV	CCTV SITE
CDPD	ICDPD	CDPD TRANSCEIVER
	ICELLT	CELL PHONE TOWER
	ICJB	CONDUIT JACK OR BORING
	ICNTLCAB	CONTROLLER CABINET
C	ICPB	COMMUNICATION PULL BOX
	ICTD	CONDUIT TURNING DOWN
	ICTU	CONDUIT TURNING UP
	ICVTRT	COMM. VEH. ROAD TRANSCEIVER
	IDEFAULT	DEFAULT
EZ	IEZR	E-ZPASS READER
EZ-T	IEZTR	TRANSMITTAL READER
XC	IFOXCAB	FIBER OPTIC X-CONNECT CABINET
	IFUSSPL	FUSION SPLICE
	IHARADV	HAR ADVISORY SIGN
	IHARST	HAR SITE
LC	ILC	LOAD CENTER
	IMECSPL	MECHANICAL SPLICE
PM	IMSCS	PORT. SPEED & COUNT SENSOR
M	IMSCTS	MICRO SPEED & COUNT SENSOR
M	IMT	MICROWAVE TRANSCEIVER
VMS	IOVHVMS	PERM. OVERHEAD VMS
PA	IPASCS	PORT. ACCOU. SPD & CNT. SENSOR
	IPEDS	PEDESTRIAN SIGNAL HEAD
	IPSS	PAVEMENT SURFACE SENSOR
PVMS	IPVMS	PERM. VMS
RM	IRM	RAMP METER
RWIS	IRWIS	RDWY WEATHER INFO. SENSOR
	ISP	SOLAR PANEL
SS	ISST	SPREAD SPECT. TRANSCEIVER
TC	ITDB	TELEPHONE DEMARCATION BLK
TP	ITP	SUBSURFACE TEMP. PROBE
	IVTRT	VEHICLE TO RDWY TRANSCEIVER
WIM	IWIMD	WEIGHT IN MOTION DETECTOR
WVR	IWVR	WIRELESS VIDEO REPEATER
V	IWVRC	WIRELESS VIDEO RECEIVER
V	IWVTT	WIRELESS VIDEO TRANSMITTER

ROW MAPPING

CELL	NAME	DESCRIPTION
	MDL1P	DEED LINE, TYPE 1
	MDL2P	DEED LINE, TYPE 2
	MDL3P	DEED LINE, TYPE 3
	MDL4P	DEED LINE, TYPE 4
	MDL5P	DEED LINE, TYPE 5
	MEEP	EASEMENT, EXISTING
	MEPAP_P	EASEMENT, PERM., APPROX.
	MEPP_P	EASEMENT, PERM., BACK LINE
	MEPSP_P	EASEMENT, PERM., SHAPE
	MFAP_P	FEE ACQUISITION, APPROX.
	MFP_P	FEE ACQUISITION, BACK LINE
	MFSP_P	FEE ACQUISITION, SHAPE
	MHBAP	HIGHWAY BNDRY., APPROX.
	MHBCP	HISTORICAL, BLDG. CORNERS
	MHBP	HIGHWAY BNDRY, PT.
	MJCP	PT., JURIS. CITY
	MPBC	PT., BUILDING CORNER
	MPCC	PT., CROSS CUT
	MPDH	PT., DRILL HOLE
	MPF	PT., FENCE LOCATION
	MPIP	PT., IRON PIPE
	MPIR	PT., IRON ROD
	MPM	PT., MONUMENT
	MPMM	PT., MONUMENT, MISC.
	MPN	PT., NAIL
	MPRS	PT., RAILROAD SPIKE
	MPSP	PT., SPIKE
	MPST	PT., STAKE
	MPTW	PT., TREE W/ WIRE
	MPWL	PT., WALL LOCATION

ROW ACQUISITION

M1 P1 FEE	MFS_P_T	FEE ACQUISITION
M1 P1 PE	MEPS_P_T	EASEMENT, PERMANENT
M1 P1 TE	METS_P_T	EASEMENT, TEMPORARY
M1 P1 TO	METS_P_T	OCCUPANCY, TEMPORARY
M1 P1 FEE WO/A	MFS_P_T	FEE ACQUISITION W/O ACCESS

ROADWAY

	RES P	ELEVATION, SPOT
	RGA	GUIDE RAIL, ANCHOR
	RGP	GUIDE POST, SINGLE

SIGNS

CELL	NAME	DESCRIPTION
	S	SINGLE POST
	S_P	SINGLE POST, PROPOSED
	SB_P	BACK TO BACK, PROPOSED
	SDEL	DELINEATORS
	SPM	PARKING METER
RFM	SRM	REFERENCE MARKERS
	SRSC3	SHLD, CTY, 123 DIG.
	SRSC4	SHLD, CTY, 4 DIG.
	SRSCT2	SHLD, CTY TOUR, 1-2 DIG.
	SRSCT4	SHLD, CTY TOUR, 3-4 DIG.
	SRSI	SHLD, INTERSTATE
	SRSN2	SHLD, NATIONAL, 2 DIG.
	SRSN3	SHLD, NATIONAL, 3 DIG.
	SRSS2	SHLD, STATE, 2 DIG.
	SRSS3	SHLD, STATE, 3 DIG.
	SRSS4	SHLD, STATE, 4 DIG.

TRAFFIC CONTROL

	TCBJ	BOX, JUNCTION
	TCBP	BOX, PULL BOX
	TCBS	BOX, SPLICE
	TCMC	MICROCOMPUTER CABINET
	TCPP	PED POLE
	TCSH	SIGNAL HEADS
	TCSP	SIGNAL POLE

TRAFFIC WORK ZONE

	TWZAP_P	ARROW PANEL
	TWZAPC_P	ARROW PANEL, CAUTION MODE
	TWZAPT_P	ARROW PANEL, TRAILER OR SUPPORT
	TWZBCD_P	BARRICADE (TYPE III)
	TWZCMS_P	CHANGEABLE MESSAGE SIGN (PVMS)
	TWZFLG_P	FLAGGER
	TWZFT_P	FLAG TREE
	TWZIA_P	IMPACT ATTENUATOR / CRASH CUSHION (TEMPORARY)
	TWZLUM_P	LUMINAIRE (TEMPORARY)
	TWZSDT_P	SYMBOL, DIRECTION OF TRAFFIC
	TWZSDTD_P	SYMBOL, DIRECTION OF TEMPORARY TRAFFIC DETOUR
	TWZSGN_P	SIGN (TEMPORARY)
	TWZSIG_P	SIGNAL, TRAFFIC OR PEDESTRIAN (TEMPORARY)
	TWZWL_P	WARNING LIGHT
	TWZWV_P	WORK VEHICLE
	TWZWVA_P	WORK VEHICLE WITH TRUCK MOUNTED ATTENUATOR

UTILITIES

CELL	NAME	DESCRIPTION
E	UEB	ELECTRIC, BOX
E	UEM	ELECTRIC, METER
E	UEMH	ELECTRIC, MANHOLE
	UEPT	ELECTRIC, POLE, TRANS.
G	UGM	GAS, METER
G	UGMH	GAS, MANHOLE
	UGLM	GAS, LINE MARKER
FF	UGP	GAS/FUEL PUMP
	UGV	GAS, VALVE
	UGVT	GAS, VENT
	ULP	LIGHTING, POLE
	ULPM	LIGHTING, POLE, MEDIAN
	ULPP	LIGHTING, POLE, PED.
	UMFC	MISC. FILLER CAP
	UOLM	OIL, LINE MARKER
	UP	POLE, WITH UTILITY
	UPD	POLE, DEAD (NO UTILITY)
	UPL	POLE, WITH LIGHT
S	USMH	SANITARY SEWER MANHOLE
P	UTB	TELEPHONE, BOOTH
	UTLM	TELEPHONE, LINE MARKER
T	UTMH	TELEPHONE, MANHOLE
	UTVLM	CABLE TV, LINE MARKER
C	UTVPB	CABLE TV, PULL BOX
	UUB	UNKNOWN, BOX
	UUJB	UNKNOWN, JUNCTION BOX
	UUMH	UNKNOWN, MANHOLE
	UUPB	UNKNOWN, PULL BOX
	UUVL	UNKNOWN, VALVE
	UUVT	UNKNOWN, VENT
W	UUW	UNKNOWN, WELL
	UWFH	WATER, FIRE HYDRANT
W	UWM	WATER, METER
W	UWMH	WATER, MANHOLE
	UWV	WATER, VALVE
W	UWW	WATER, WELL

1. THE LEGEND ILLUSTRATES MAPPING FEATURES (EXISTING AND PROPOSED).
2. FEATURES ARE SHOWN AS EITHER LINEAR (ROADWAY GUIDERAIL, ROADWAY SIDEWALK, UTILITY LINES, ETC.) OR POINT (SIGN, UTILITY POLE, ETC.).
3. FEATURES SHOWN ON THE LEGEND AS EXISTING FEATURES ALSO HAVE CORRESPONDING PROPOSED FEATURES.
4. PROPOSED FEATURE SYMBOLOGY IS IDENTICAL TO EXISTING FEATURE SYMBOLOGY EXCLUDING LINE WEIGHT. LINE WEIGHT FOR PROPOSED FEATURES IS THICKER (0.015 in ON B SIZE DRAWINGS).
5. MAPPING FEATURES NOT INCLUDED ON THE LEGEND SHEET DO NOT HAVE A UNIQUE SYMBOLOGY (SUCH AS THE PAVEMENT EDGE, PAVEMENT EDGE OF TRAVEL WAY) AND SHOULD BE LABELED ON THE PLANS.
6. FEATURES SHOWN AT THE HEAVIER WEIGHT ARE PROPOSED ONLY AND DO NOT HAVE CORRESPONDING EXISTING FEATURES.

NY 78, TRANSIT ROAD, S.H. 1334-A-1 FRENCH ROAD TO WEHRLE DRIVE TOWNS OF CHEEKTOWAGA & LANCASTER VILLAGE OF DEPEW COUNTY: ERIE REGION: 05	PIN 5813.61 NY 78	BRIDGES	CULVERTS	ALL DIMENSIONS IN ft UNLESS OTHERWISE NOTED LEGEND - POINT SYMBOLOGY

CONTRACT NUMBER D264571

DRAWING NO. LEG-2
SHEET NO. 4

NEW YORK STATE OF OPPORTUNITY. Department of Transportation

DESIGN SUPERVISOR S. S. VAIDYA | JOB MANAGER R. F. SCHALLER | DESIGN C. L. CRITES | CHECK R. F. SCHALLER | DRAFTING C. L. CRITES | CHECK R. F. SCHALLER | PROJECT MANAGER S. S. VAIDYA

FILE NAME = 581361_CPH.HWY.LEG-2.dgn
DATE/TIME = 22-JUN-2021 12:31
USER = cortes

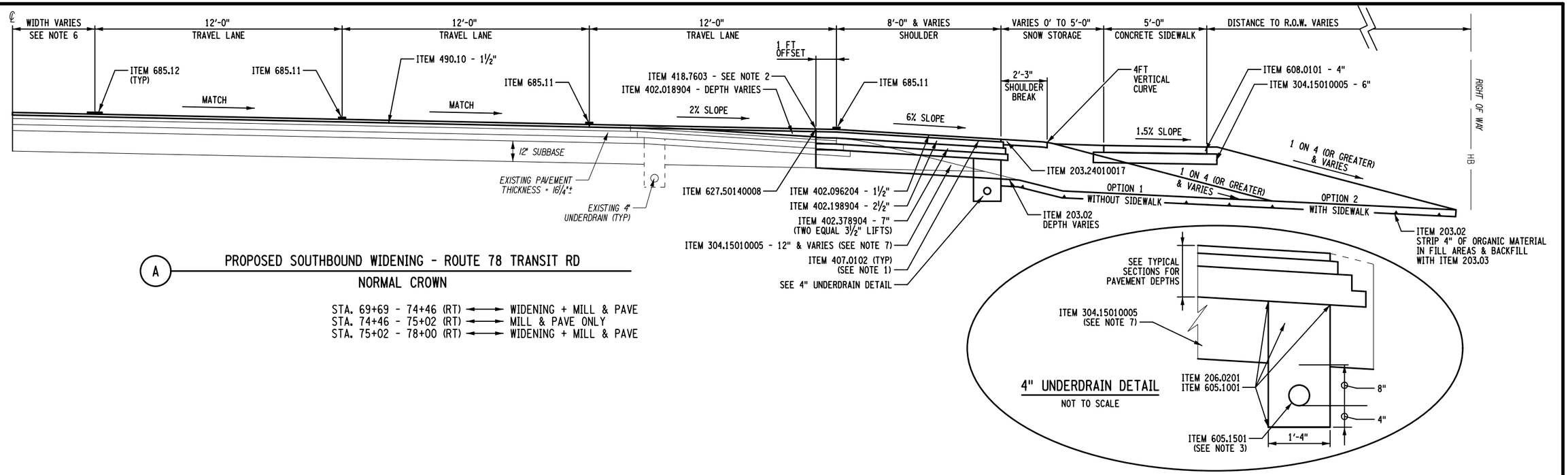

4" UNDERDRAIN DETAIL

NOT TO SCALE

(A) PROPOSED SOUTHBOUND WIDENING - ROUTE 78 TRANSIT RD

NORMAL CROWN

STA. 69+69 - 74+46 (RT) ⟷ WIDENING + MILL & PAVE
STA. 74+46 - 75+02 (RT) ⟷ MILL & PAVE ONLY
STA. 75+02 - 78+00 (RT) ⟷ WIDENING + MILL & PAVE

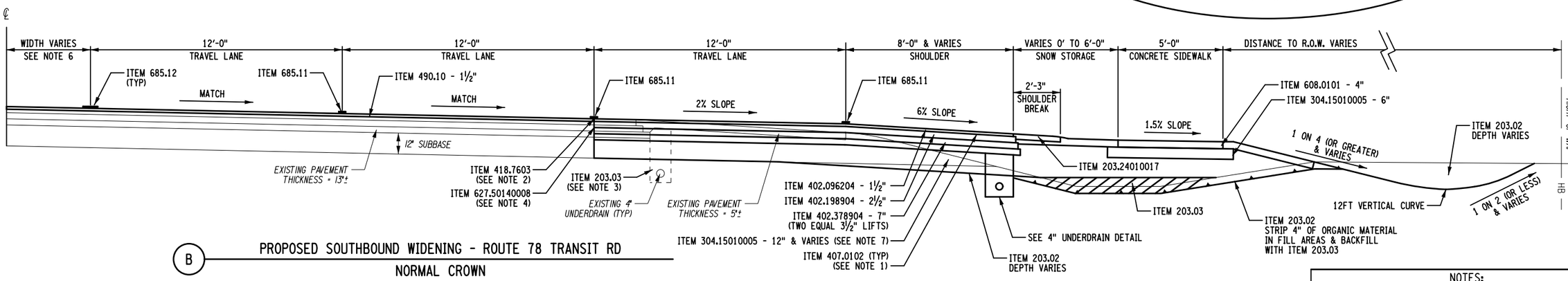

(B) PROPOSED SOUTHBOUND WIDENING - ROUTE 78 TRANSIT RD

NORMAL CROWN

STA. 78+00 - 85+00 (RT) ⟷ SHOULDER RECONSTRUCTION + WIDENING + MILL & PAVE
STA. 85+00 - 87+28 (RT) ⟷ MILL & PAVE ONLY
STA. 87+28 - 91+24 (RT) ⟷ SHOULDER RECONSTRUCTION + WIDENING + MILL & PAVE
STA. 91+24 - 91+62 (RT) ⟷ MILL & PAVE ONLY
STA. 91+62 - 96+20 (RT) ⟷ SHOULDER RECONSTRUCTION + WIDENING + MILL & PAVE

2 0 2 4 6 8 10'

1" = 5'

203.24010017

ITEM	DESCRIPTION	UNIT	ITEM	DESCRIPTION	UNIT
203.02	UNCLASSIFIED EXCAVATION & DISPOSAL	CY	418.7603	ASPHALT PAVEMENT JOINT ADHESIVE	LF
203.03	EMBANKMENT IN PLACE	CY	490.10	PRODUCTION COLD MILLING OF BITUMINOUS CONCRETE	SY
203.24010017	SHOULDER BACKUP MATERIAL	TON	605.1001	UNDERDRAIN FILTER TYPE 2	CY
206.0201	TRENCH AND CULVERT EXCAVATION	CY	605.1501	PERFORATED CORRUGATED POLYETHYLENE UNDERDRAIN TUBING, 4" DIAMETER	LF
304.15010005	SUBBASE COURSE, OPTIONAL TYPE (MODIFIED)	CY	608.0101	CONCRETE SIDEWALKS AND DRIVEWAYS	CY
402.018904	TRUE & LEVELING F9, SUPERPAVE HMA, 80 SERIES COMPACTION	TON	627.50140008	CUTTING PAVEMENT	LF
402.096204	9.5 F2 TOP COURSE HMA, 60 SERIES COMPACTION	TON	685.11	WHITE EPOXY REFLECTORIZED PAVEMENT STRIPES - 20 MILS	LF
402.198904	19 F9 BINDER COURSE HMA, 80 SERIES COMPACTION	TON	685.12	YELLOW EPOXY RELECTORIZED PAVEMENT STRIPES - 20 MILS	LF
402.378904	37.5 F9 BASE COURSE HMA, 80 SERIES COMPACTION	TON			
407.0102	DILUTED TACK COAT	GAL			

NOTES:

1. TACK COAT SHALL BE PLACED BETWEEN ALL ASPHALT SURFACES.
2. ASPHALT PAVEMENT JOINT ADHESIVE SHALL BE PLACED ALONG ALL VERTICAL FACES FOR ALL JOINTS ON THE SURFACE COURSE.
3. ANY EXISITNG UNDERDRAIN TRENCH BELOW PROPOSED SUBBASE SHALL BE EXCAVATED WITH ITEM 203.02 AND BACKFILLED WITH ITEM 203.03
4. EXISITNG FULL DEPTH SHOULDER ENDS AT STA. 78+00. BEGIN FULL SHOULDER RECONSTRUCTION AT STATION 78+00.
5. ALL SECTIONS AND ASSOCIATED STATIONING ON THIS SHEET WERE OBTAINED FROM 1994 (D254088) AND SHALL BE CONSIDERED APPROXIMATE.
6. SEE DWGS. STP-1 THRU STP-27 FOR STRIPING PLANS.
7. MATCH THE EXISTING SUBBASE ELEVATION (REFER TO CORE SAMPLES IN SUPPLEMENTAL INFORMATION). IF THE EXISTING SUBBASE IS DEEPER THAN WHAT THE PROPOSED DIMENSIONS SHOW IN THESE TYPICALS, ANY ADDITIONAL EXCAVATION NEEDED SHALL BE BACKFILLED WITH ITEM 304.15010005.
8. REFER TO DWG. TYP-3 FOR TABLE OF SECTIONS.

AFFIX SEAL:
ON:

ALTERED BY:
ON:

D264571
STATE OF NEW YORK
ROBERT F. SCHALLER
NO. 082465
LICENSED PROFESSIONAL ENGINEER

AS-BUILT REVISIONS
DESCRIPTION OF ALTERATIONS:

NY 78, TRANSIT ROAD, S.H. 1334A-1
FRENCH ROAD TO WEHRLE DRIVE
TOWNS OF CHEEKTOWAGA & LANCASTER
VILLAGE OF DEPEW
COUNTY: ERIE REGION: 05

PIN 5813.61
NY 78

BRIDGES

CULVERTS

ALL DIMENSIONS IN ft UNLESS OTHERWISE NOTED

TYPICAL SECTIONS
SHEET 1 OF 10

CONTRACT NUMBER
D264571

DRAWING NO. TYP-1
SHEET NO. 5

IT IS A VIOLATION OF LAW FOR ANY PERSON, UNLESS THEY ARE ACTING UNDER THE DIRECTION OF A LICENSED PROFESSIONAL ENGINEER, ARCHITECT, LANDSCAPE ARCHITECT, OR LAND SURVEYOR, TO ALTER AN ITEM IN ANY WAY. IF AN ITEM BEARING THE STAMP OF A LICENSED PROFESSIONAL IS ALTERED, THE ALTERING ENGINEER, ARCHITECT, LANDSCAPE ARCHITECT, OR LAND SURVEYOR SHALL STAMP THE DOCUMENT AND INCLUDE THE NOTATION "ALTERED BY" FOLLOWED BY THEIR SIGNATURE, THE DATE OF SUCH ALTERATION, AND A SPECIFIC DESCRIPTION OF THE ALTERATION.

NEW YORK STATE OF OPPORTUNITY. Department of Transportation

PROJECT MANAGER S. S. VAIDYA
CHECK C. L. CRITES
DRAFTING P.M. LAUGEMAN
CHECK R. F. SCHALLER
DESIGN P. M. LAUGEMAN
JOB MANAGER R. F. SCHALLER
DESIGN SUPERVISOR S. S. VAIDYA

FILE NAME = 581361_CPH_HWY_TYP-1.dgn
DATE/TIME = 22-JUN-2021 12:31
USER = cartes

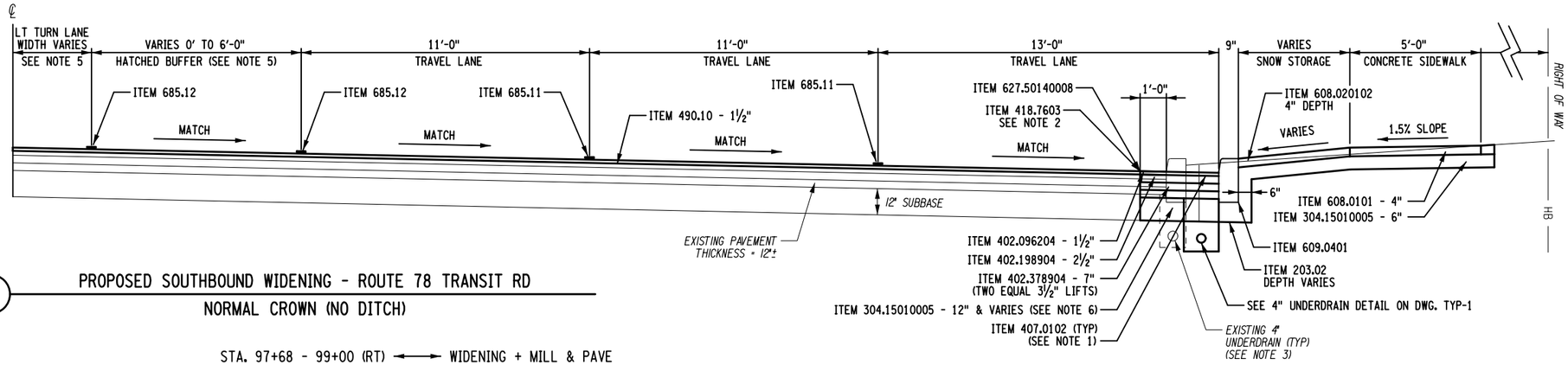

(C) PROPOSED SOUTHBOUND WIDENING - ROUTE 78 TRANSIT RD
NORMAL CROWN (NO DITCH)

STA. 97+68 - 99+00 (RT) ⟷ WIDENING + MILL & PAVE

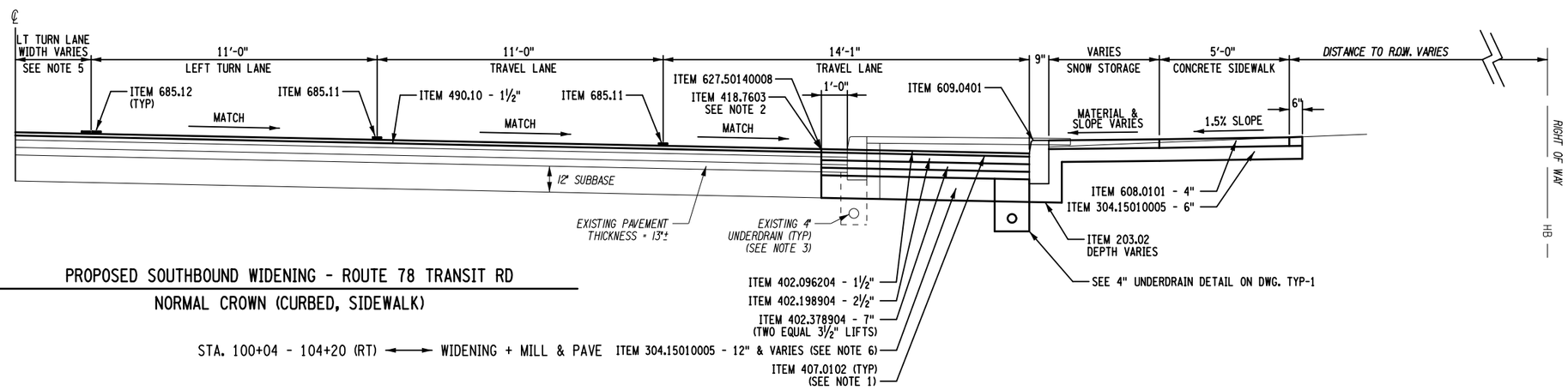

(D) PROPOSED SOUTHBOUND WIDENING - ROUTE 78 TRANSIT RD
NORMAL CROWN (CURBED, SIDEWALK)

STA. 100+04 - 104+20 (RT) ⟷ WIDENING + MILL & PAVE

2 0 2 4 6 8 10'
1" = 5'

ITEM	DESCRIPTION	UNIT	ITEM	DESCRIPTION	UNIT
203.02	UNCLASSIFIED EXCAVATION & DISPOSAL	CY	608.020102	HMA SIDEWALKS, DRIVEWAYS, BIKE PATHS & VEGETATION CONTROL STRIPS	TON
304.15010005	SUBBASE COURSE, OPTIONAL TYPE (MODIFIED)	CY	609.0401	CAST-IN-PLACE CONCRETE CURB TYPE VF150	LF
402.096204	9.5 F2 TOP COURSE HMA, 60 SERIES COMPACTION	TON	627.50140008	CUTTING PAVEMENT	LF
402.198904	19 F9 BINDER COURSE HMA, 80 SERIES COMPACTION	TON	685.11	WHITE EPOXY REFLECTORIZED PAVEMENT STRIPES - 20 MILS	LF
402.378904	37.5 F9 BASE COURSE HMA, 80 SERIES COMPACTION	TON	685.12	YELLOW EPOXY RELECTORIZED PAVEMENT STRIPES - 20 MILS	LF
407.0102	DILUTED TACK COAT	GAL			
418.7603	ASPHALT PAVEMENT JOINT ADHESIVE	LF			
490.10	PRODUCTION COLD MILLING OF BITUMINOUS CONCRETE	SY			
608.0101	CONCRETE SIDEWALKS AND DRIVEWAYS	CY			

NOTES:

1. TACK COAT SHALL BE PLACED BETWEEN ALL ASPHALT SURFACES.
2. ASPHALT PAVEMENT JOINT ADHESIVE SHALL BE PLACED ALONG ALL VERTICAL FACES FOR ALL JOINTS ON THE SURFACE COURSE.
3. ANY EXISITNG UNDERDRAIN TRENCH BELOW PROPOSED SUBBASE SHALL BE EXCAVATED WITH ITEM 203.02 AND BACKFILLED WITH ITEM 203.03
4. ALL SECTIONS AND ASSOCIATED STATIONING ON THIS SHEET WERE OBTAINED FROM 1994 (D254088) AND SHALL BE CONSIDERED APPROXIMATE.
5. SEE DWGS. STP-1 THRU STP-27 FOR STRIPING PLANS.
6. MATCH THE EXISTING SUBBASE ELEVATION (REFER TO CORE SAMPLES IN SUPPLEMENTAL INFORMATION). IF THE EXISTING SUBBASE IS DEEPER THAN WHAT THE PROPOSED DIMENSIONS SHOW IN THESE TYPICALS, ANY ADDITIONAL EXCAVATION NEEDED SHALL BE BACKFILLED WITH ITEM 304.15010005.
7. REFER TO DWG. TYP-3 FOR TABLE OF SECTIONS.

AFFIX SEAL:
ON:

ALTERED BY:
ON:

D264571
STATE OF NEW YORK
ROBERT F. SCHALLER
NO. 082465
LICENSED PROFESSIONAL ENGINEER

AS-BUILT REVISIONS
DESCRIPTION OF ALTERATIONS:

NY 78, TRANSIT ROAD, S.H. 1334A-1
FRENCH ROAD TO WEHRLE DRIVE
TOWNS OF CHEEKTOWAGA & LANCASTER
VILLAGE OF DEPEW
COUNTY: ERIE REGION: 05

PIN 5813.61
NY 78

BRIDGES

CULVERTS

ALL DIMENSIONS IN ft UNLESS OTHERWISE NOTED

TYPICAL SECTIONS
SHEET 2 OF 10

CONTRACT NUMBER
D264571

DRAWING NO. TYP-2
SHEET NO. 6

IT IS A VIOLATION OF LAW FOR ANY PERSON, UNLESS THEY ARE ACTING UNDER THE DIRECTION OF A LICENSED PROFESSIONAL ENGINEER, ARCHITECT, LANDSCAPE ARCHITECT, OR LAND SURVEYOR, TO ALTER AN ITEM IN ANY WAY. IF AN ITEM BEARING THE STAMP OF A LICENSED PROFESSIONAL IS ALTERED, THE ALTERING ENGINEER, ARCHITECT, LANDSCAPE ARCHITECT, OR LAND SURVEYOR SHALL STAMP THE DOCUMENT AND INCLUDE THE NOTATION "ALTERED BY" FOLLOWED BY THEIR SIGNATURE, THE DATE OF SUCH ALTERATION, AND A SPECIFIC DESCRIPTION OF THE ALTERATION.

NEW YORK STATE OF OPPORTUNITY. Department of Transportation

DESIGN SUPERVISOR S. S. VAIDYA
JOB MANAGER R. F. SCHALLER
DESIGN P.M. LAUGEMAN
CHECK R. F. SCHALLER
DRAFTING P.M. LAUGEMAN
CHECK C. L. CRITES
PROJECT MANAGER S. S. VAIDYA
FILE NAME = 581361_CPH_HWY_TYP-2.dgn
DATE/TIME = 22-JUN-2021 12:31
USER = ccrites

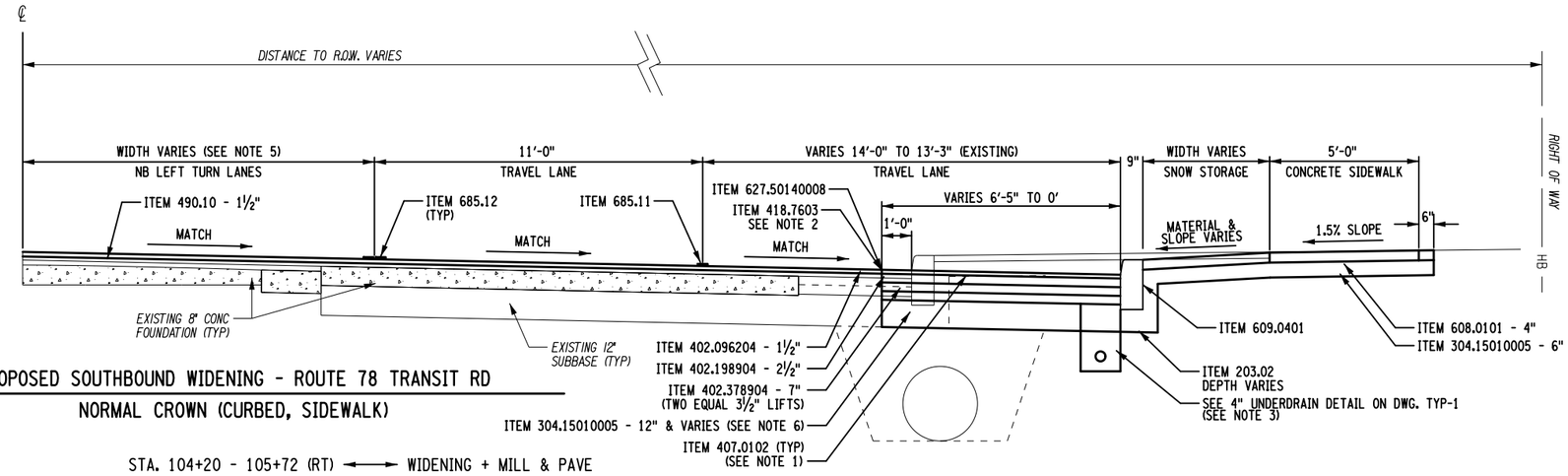

E — PROPOSED SOUTHBOUND WIDENING - ROUTE 78 TRANSIT RD
NORMAL CROWN (CURBED, SIDEWALK)

STA. 104+20 - 105+72 (RT) ⟷ WIDENING + MILL & PAVE

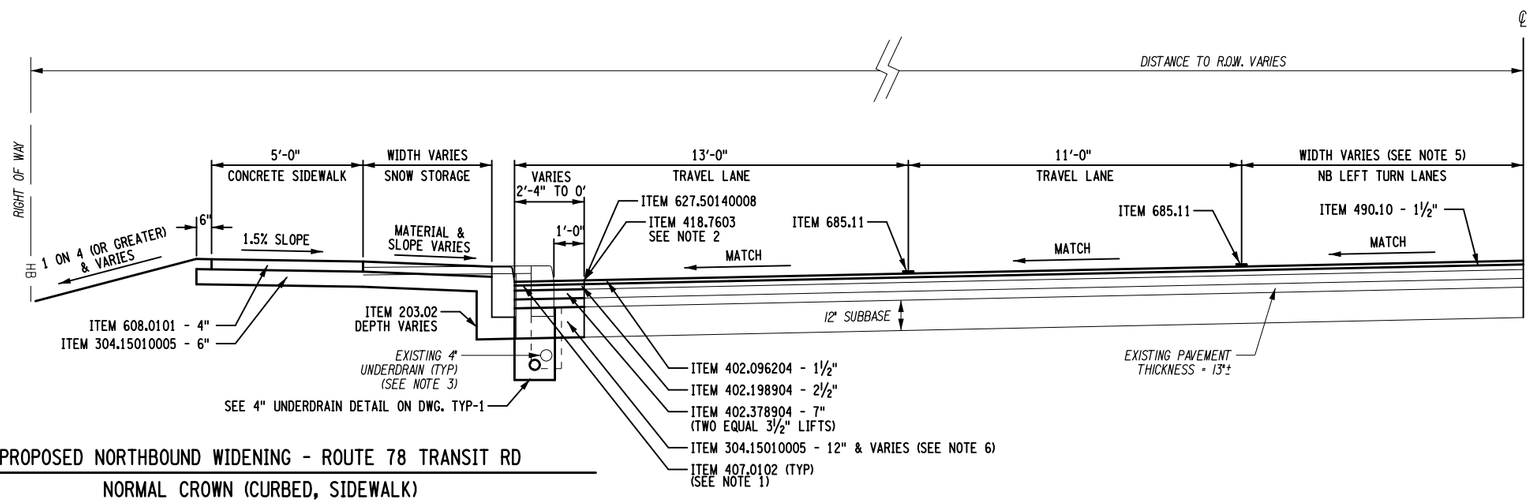

F — PROPOSED NORTHBOUND WIDENING - ROUTE 78 TRANSIT RD
NORMAL CROWN (CURBED, SIDEWALK)

STA. 99+93 - 101+75 (LT) ⟷ WIDENING + MILL & PAVE

2 0 2 4 6 8 10'
1" = 5'

TABLE OF SECTIONS

SECTION LIMIT	OFFSET	SECTION
TRANSIT ROAD - 39+70 TO 55+09	LT & RT	M
TRANSIT ROAD - 55+09 TO 56+99	LT & RT	N
TRANSIT ROAD - 56+99 TO 60+34	TRANSITION	N-O
TRANSIT ROAD - 60+34 TO 63+20	LT & RT	O
TRANSIT ROAD - 63+20 TO 68+25	LT	R
TRANSIT ROAD - 63+20 TO 67+75	RT	R
TRANSIT ROAD - 68+25 TO 95+40	LT	S
TRANSIT ROAD - 67+75 TO 69+69	RT	S
TRANSIT ROAD - 69+69 TO 78+00	RT	A
TRANSIT ROAD - I-90 ENTRANCE RAMP	RT	P
TRANSIT ROAD - I-90 INTER/SHOULDER	RT	Q
TRANSIT ROAD - 78+00 TO 96+20	RT	B
TRANSIT ROAD - 95+40 TO 96+20	LT	R
TRANSIT ROAD - BRIDGE OVER ELLICOTT CREEK		
TRANSIT ROAD - 97+68 TO 99+00	RT	C
TRANSIT ROAD - 97+68 TO 98+75	LT	T
TRANSIT ROAD - GENESEE STREET INTERSECTION		
TRANSIT ROAD - 99+93 TO 101+75	LT	F
TRANSIT ROAD - 100+04 TO 104+20	RT	D
TRANSIT ROAD - 101+75 TO 104+20	LT	T
TRANSIT ROAD - 104+20 TO 170+00	LT	U
TRANSIT ROAD - 104+20 TO 105+72	RT	E
TRANSIT ROAD - 105+72 TO 170+00	RT	U
TRANSIT ROAD - 170+00 TO 172+50	LT & RT	L
GENESEE STREET - G 276+51 TO G 280+00	RT	G
GENESEE STREET - G 276+51 TO G 280+00	LT	I
GENESEE STREET - G 280+00 TO G 280+25	TRANSITION	G-H/(I-I•)
GENESEE STREET - G 280+25 TO G 284+25	RT	H
GENESEE STREET - G 280+25 TO G 284+75	LT	I
GENESEE STREET - TRANSIT ROAD INTERSECTION		
GENESEE STREET - G 285+58 TO G 291+85	LT	J
GENESEE STREET - G 285+58 TO G 291+85	RT	T

• REPRESENTS A TRANSITION FROM SECTION "I" (SUPERELEVATED) TO SECTION "I" (NORMAL CROWN).

ITEM	DESCRIPTION	UNIT	ITEM	DESCRIPTION	UNIT
203.02	UNCLASSIFIED EXCAVATION & DISPOSAL	CY	608.0101	CONCRETE SIDEWALKS AND DRIVEWAYS	CY
304.15010005	SUBBASE COURSE, OPTIONAL TYPE (MODIFIED)	CY	609.0401	CAST-IN-PLACE CONCRETE CURB TYPE VF150	LF
402.018204	TRUE & LEVELING F9, SUPERPAVE HMA, 80 SERIES COMPACTION	TON	627.50140008	CUTTING PAVEMENT	LF
402.096204	9.5 F2 TOP COURSE HMA, 60 SERIES COMPACTION	TON	685.11	WHITE EPOXY REFLECTORIZED PAVEMENT STRIPES - 20 MILS	LF
402.198904	19 F9 BINDER COURSE HMA, 80 SERIES COMPACTION	TON	685.12	YELLOW EPOXY RELECTORIZED PAVEMENT STRIPES - 20 MILS	LF
402.378904	37.5 F9 BASE COURSE HMA, 80 SERIES COMPACTION	TON			
407.0102	DILUTED TACK COAT	GAL			
418.7603	ASPHALT PAVEMENT JOINT ADHESIVE	LF			
490.10	PRODUCTION COLD MILLING OF BITUMINOUS CONCRETE	SY			

NOTES:

1. TACK COAT SHALL BE PLACED BETWEEN ALL ASPHALT SURFACES.
2. ASPHALT PAVEMENT JOINT ADHESIVE SHALL BE PLACED ALONG ALL VERTICAL FACES FOR ALL JOINTS ON THE SURFACE COURSE.
3. ANY EXISITNG UNDERDRAIN TRENCH BELOW PROPOSED SUBBASE SHALL BE EXCAVATED WITH ITEM 203.02 AND BACKFILLED WITH ITEM 203.03
4. SECTION E & ASSOCIATED STATIONING WERE OBTAINED FROM 1990 (D252633). SECTION F & ASSOCIATED STATIONING WAS OBTAINED FROM 1994 (D254088). BOTH SHALL BE CONSIDERED APPROXIMATE.
5. SEE DWGS. STP-1 THRU STP-27 FOR STRIPING PLANS.
6. MATCH THE EXISTING SUBBASE ELEVATION (REFER TO CORE SAMPLES IN SUPPLEMENTAL INFORMATION). IF THE EXISTING SUBBASE IS DEEPER THAN WHAT THE PROPOSED DIMENSIONS SHOW IN THESE TYPICALS, ANY ADDITIONAL EXCAVATION NEEDED SHALL BE BACKFILLED WITH ITEM 304.15010005.

AFFIX SEAL:
ON:

ALTERED BY:
ON:

D264571
STATE OF NEW YORK
ROBERT F. SCHALLER
LICENSED PROFESSIONAL ENGINEER
NO. 082465

AS-BUILT REVISIONS
DESCRIPTION OF ALTERATIONS:

NY 78, TRANSIT ROAD, S.H. 1334A-1
FRENCH ROAD TO WEHRLE DRIVE
TOWNS OF CHEEKTOWAGA & LANCASTER
VILLAGE OF DEPEW
COUNTY: ERIE REGION: 05

PIN 5813.61
NY 78

BRIDGES

CULVERTS

ALL DIMENSIONS IN ft UNLESS OTHERWISE NOTED

TYPICAL SECTIONS
SHEET 3 OF 10

CONTRACT NUMBER
D264571

DRAWING NO. TYP-3
SHEET NO. 7

IT IS A VIOLATION OF LAW FOR ANY PERSON, UNLESS THEY ARE ACTING UNDER THE DIRECTION OF A LICENSED PROFESSIONAL ENGINEER, ARCHITECT, LANDSCAPE ARCHITECT, OR LAND SURVEYOR, TO ALTER AN ITEM IN ANY WAY. IF AN ITEM BEARING THE STAMP OF A LICENSED PROFESSIONAL IS ALTERED, THE ALTERING ENGINEER, ARCHITECT, LANDSCAPE ARCHITECT, OR LAND SURVEYOR SHALL STAMP THE DOCUMENT AND INCLUDE THE NOTATION "ALTERED BY" FOLLOWED BY THEIR SIGNATURE, THE DATE OF SUCH ALTERATION, AND A SPECIFIC DESCRIPTION OF THE ALTERATION.

NEW YORK STATE OF OPPORTUNITY. Department of Transportation

DESIGN SUPERVISOR S. S. VAIDYA JOB MANAGER R. F. SCHALLER DESIGN P.M. LAUGEMAN CHECK R. F. SCHALLER DRAFTING P.M. LAUGEMAN CHECK C. L. CRITES PROJECT MANAGER S. S. VAIDYA
FILE NAME = 581361_CPH_HWY_TYP-3.dgn
DATE/TIME = 22-JUN-2021 12:31
USER = cortes

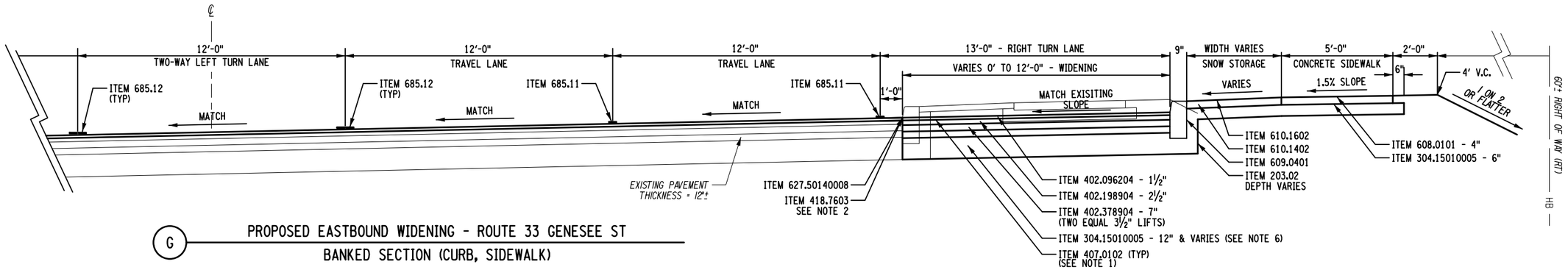

G — PROPOSED EASTBOUND WIDENING - ROUTE 33 GENESEE ST

BANKED SECTION (CURB, SIDEWALK)

STA. G 276+51 - G 280+00 (RT) ⟷ WIDENING + MILL & PAVE

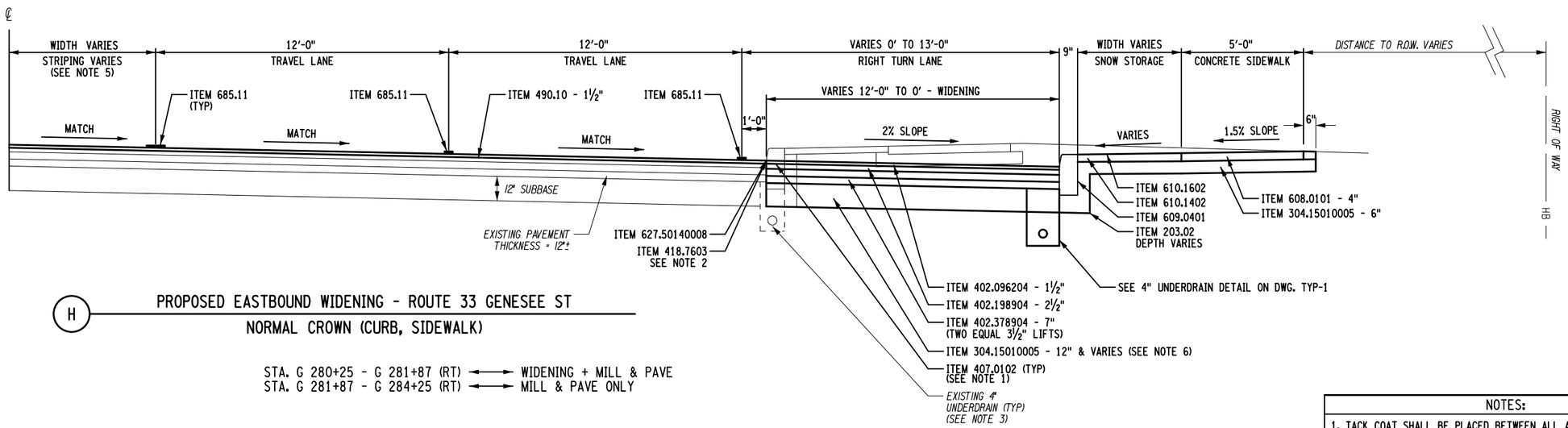

H — PROPOSED EASTBOUND WIDENING - ROUTE 33 GENESEE ST

NORMAL CROWN (CURB, SIDEWALK)

STA. G 280+25 - G 281+87 (RT) ⟷ WIDENING + MILL & PAVE
STA. G 281+87 - G 284+25 (RT) ⟷ MILL & PAVE ONLY

2 0 2 4 6 8 10'
1" = 5'

ITEM	DESCRIPTION	UNIT	ITEM	DESCRIPTION	UNIT
203.02	UNCLASSIFIED EXCAVATION & DISPOSAL	CY	608.0101	CONCRETE SIDEWALKS AND DRIVEWAYS	CY
203.03	EMBANKMENT IN PLACE	CY	609.0401	CAST-IN-PLACE CONCRETE CURB TYPE VF150	LF
304.15010005	SUBBASE COURSE, OPTIONAL TYPE	CY	610.1402	TOPSOIL - ROADSIDE	CY
402.096204	9.5 F2 TOP COURSE HMA, 60 SERIES COMPACTION	TON	610.1602	TURF ESTABLISHMENT - LAWNS	SY
402.198904	19 F9 BINDER COURSE HMA, 80 SERIES COMPACTION	TON	627.50140008	CUTTING PAVEMENT	LF
402.378904	37.5 F9 BASE COURSE HMA, 80 SERIES COMPACTION	TON	685.11	WHITE EPOXY REFLECTORIZED PAVEMENT STRIPES - 20 MILS	LF
407.0102	DILUTED TACK COAT	GAL	685.12	YELLOW EPOXY RELECTORIZED PAVEMENT STRIPES - 20 MILS	LF
418.7603	ASPHALT PAVEMENT JOINT ADHESIVE	LF			
490.10	PRODUCTION COLD MILLING OF BITUMINOUS CONCRETE	SY			

NOTES:

1. TACK COAT SHALL BE PLACED BETWEEN ALL ASPHALT SURFACES.
2. ASPHALT PAVEMENT JOINT ADHESIVE SHALL BE PLACED ALONG ALL VERTICAL FACES FOR ALL JOINTS ON THE SURFACE COURSE.
3. ANY EXISITNG UNDERDRAIN TRENCH BELOW PROPOSED SUBBASE SHALL BE EXCAVATED WITH ITEM 203.02 AND BACKFILLED WITH ITEM 203.03
4. ALL SECTIONS AND ASSOCIATED STATIONING ON THIS SHEET WERE OBTAINED FROM 1994 (D254088) AND SHALL BE CONSIDERED APPROXIMATE.
5. SEE DWGS. STP-1 THRU STP-27 FOR STRIPING PLANS.
6. MATCH THE EXISTING SUBBASE ELEVATION (REFER TO CORE SAMPLES IN SUPPLEMENTAL INFORMATION). IF THE EXISTING SUBBASE IS DEEPER THAN WHAT THE PROPOSED DIMENSIONS SHOW IN THESE TYPICALS, ANY ADDITIONAL EXCAVATION NEEDED SHALL BE BACKFILLED WITH ITEM 304.15010005.
7. REFER TO DWG. TYP-3 FOR TABLE OF SECTIONS.

AFFIX SEAL:
ON:

ALTERED BY:
ON:

D264571
STATE OF NEW YORK
ROBERT F. SCHALLER
LICENSED PROFESSIONAL ENGINEER
NO. 082465

AS-BUILT REVISIONS
DESCRIPTION OF ALTERATIONS:

NY 78, TRANSIT ROAD, S.H. 1334A-1
FRENCH ROAD TO WEHRLE DRIVE
TOWNS OF CHEEKTOWAGA & LANCASTER
VILLAGE OF DEPEW
COUNTY: ERIE REGION: 05

PIN 5813.61
NY 78

BRIDGES

CULVERTS

ALL DIMENSIONS IN ft UNLESS OTHERWISE NOTED

TYPICAL SECTIONS
SHEET 4 OF 10

CONTRACT NUMBER
D264571

DRAWING NO. TYP-4
SHEET NO. 8

IT IS A VIOLATION OF LAW FOR ANY PERSON, UNLESS THEY ARE ACTING UNDER THE DIRECTION OF A LICENSED PROFESSIONAL ENGINEER, ARCHITECT, LANDSCAPE ARCHITECT, OR LAND SURVEYOR, TO ALTER AN ITEM IN ANY WAY. IF AN ITEM BEARING THE STAMP OF A LICENSED PROFESSIONAL IS ALTERED, THE ALTERING ENGINEER, ARCHITECT, LANDSCAPE ARCHITECT, OR LAND SURVEYOR SHALL STAMP THE DOCUMENT AND INCLUDE THE NOTATION "ALTERED BY" FOLLOWED BY THEIR SIGNATURE, THE DATE OF SUCH ALTERATION, AND A SPECIFIC DESCRIPTION OF THE ALTERATION.

NEW YORK STATE OF OPPORTUNITY. Department of Transportation

PROJECT MANAGER S. S. VAIDYA
CHECK C. L. CRITES
DRAFTING P.M. LAUGEMAN
CHECK R. F. SCHALLER
DESIGN P.M. LAUGEMAN
JOB MANAGER R. F. SCHALLER
DESIGN SUPERVISOR S. S. VAIDYA
FILE NAME = 581361_CPH_HWY_TYP-4.dgn
DATE/TIME = 22-JUN-2021 12:31
USER = cortes

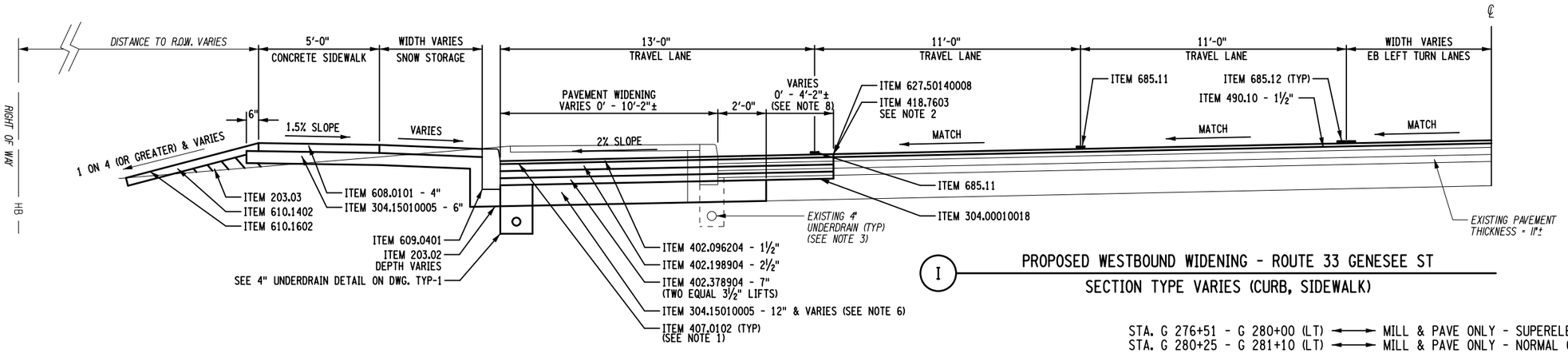

I — PROPOSED WESTBOUND WIDENING - ROUTE 33 GENESEE ST

SECTION TYPE VARIES (CURB, SIDEWALK)

STA. G 276+51 - G 280+00 (LT) ⟷ MILL & PAVE ONLY - SUPERELEVATED
STA. G 280+25 - G 281+10 (LT) ⟷ MILL & PAVE ONLY - NORMAL CROWN
STA. G 281+10 - G 284+75 (LT) ⟷ WIDENING + MILL & PAVE - NORMAL CROWN

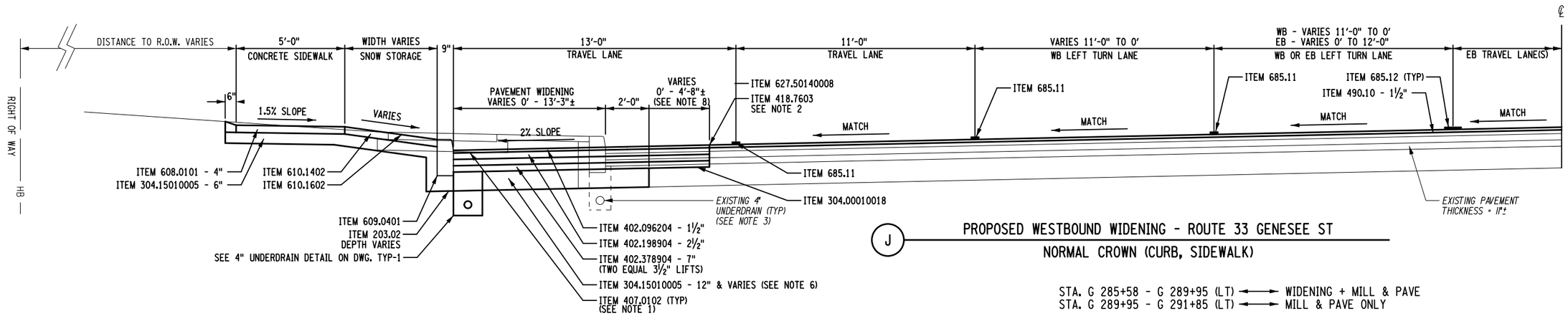

J — PROPOSED WESTBOUND WIDENING - ROUTE 33 GENESEE ST

NORMAL CROWN (CURB, SIDEWALK)

STA. G 285+58 - G 289+95 (LT) ⟷ WIDENING + MILL & PAVE
STA. G 289+95 - G 291+85 (LT) ⟷ MILL & PAVE ONLY

2 0 2 4 6 8 10'

1" = 5'

ITEM	DESCRIPTION	UNIT	ITEM	DESCRIPTION	UNIT
203.02	UNCLASSIFIED EXCAVATION & DISPOSAL	CY	490.10	PRODUCTION COLD MILLING OF BITUMINOUS CONCRETE	SY
203.03	EMBANKMENT IN PLACE	CY	608.0101	CONCRETE SIDEWALKS AND DRIVEWAYS	CY
304.00010018	FINE GRADING OF EXISTING SUBBASE	SF	609.0401	CAST-IN-PLACE CONCRETE CURB TYPE VF150	LF
304.15010005	SUBBASE COURSE, OPTIONAL TYPE (MODIFIED)	CY	610.1402	TOPSOIL - ROADSIDE	CY
402.096204	9.5 F2 TOP COURSE HMA, 60 SERIES COMPACTION	TON	610.1602	TURF ESTABLISHMENT - LAWNS	SY
402.198904	19 F9 BINDER COURSE HMA, 80 SERIES COMPACTION	TON	627.50140008	CUTTING PAVEMENT	LF
402.378904	37.5 F9 BASE COURSE HMA, 80 SERIES COMPACTION	TON	685.11	WHITE EPOXY REFLECTORIZED PAVEMENT STRIPES - 20 MILS	LF
407.0102	DILUTED TACK COAT	GAL	685.12	YELLOW EPOXY RELECTORIZED PAVEMENT STRIPES - 20 MILS	LF
418.7603	ASPHALT PAVEMENT JOINT ADHESIVE	LF			

NOTES:

1. TACK COAT SHALL BE PLACED BETWEEN ALL ASPHALT SURFACES.
2. ASPHALT PAVEMENT JOINT ADHESIVE SHALL BE PLACED ALONG ALL VERTICAL FACES FOR ALL JOINTS ON THE SURFACE COURSE.
3. ANY EXISITNG UNDERDRAIN TRENCH BELOW PROPOSED SUBBASE SHALL BE EXCAVATED WITH ITEM 203.02 AND BACKFILLED WITH ITEM 203.03
4. ALL SECTIONS AND ASSOCIATED STATIONING ON THIS SHEET WERE OBTAINED FROM 1994 (D254088) AND SHALL BE CONSIDERED APPROXIMATE.
5. SEE DWGS. STP-1 THRU STP-27 FOR STRIPING PLANS.
6. MATCH THE EXISTING SUBBASE ELEVATION (REFER TO CORE SAMPLES IN SUPPLEMENTAL INFORMATION). IF THE EXISTING SUBBASE IS DEEPER THAN WHAT THE PROPOSED DIMENSIONS SHOW IN THESE TYPICALS, ANY ADDITIONAL EXCAVATION NEEDED SHALL BE BACKFILLED WITH ITEM 304.15010005.
7. REFER TO DWG. TYP-3 FOR TABLE OF SECTIONS.
8. THIS PAVEMENT RESTORATION AREA WAS INCLUDED BETWEEN EACH DS STRUCTURE REMOVAL LOCATION TO ENSURE A UNIFORM SAWCUT AND TO PREVENT ISOLATED TAMPERING LOCATIONS WHICH MAY RESULT IN UNEVEN SETTLING OF PAVEMENT LAYERS.

AFFIX SEAL:
ON:

ALTERED BY:
ON:

D264571
STATE OF NEW YORK
ROBERT F. SCHALLER
NO. 082465
LICENSED PROFESSIONAL ENGINEER

AS-BUILT REVISIONS
DESCRIPTION OF ALTERATIONS:

NY 78, TRANSIT ROAD, S.H. 1334A-1
FRENCH ROAD TO WEHRLE DRIVE
TOWNS OF CHEEKTOWAGA & LANCASTER
VILLAGE OF DEPEW
COUNTY: ERIE REGION: 05

PIN 5813.61
NY 78

BRIDGES

CULVERTS

ALL DIMENSIONS IN ft UNLESS OTHERWISE NOTED

TYPICAL SECTIONS
SHEET 5 OF 10

CONTRACT NUMBER
D264571

DRAWING NO. TYP-5
SHEET NO. 9

IT IS A VIOLATION OF LAW FOR ANY PERSON, UNLESS THEY ARE ACTING UNDER THE DIRECTION OF A LICENSED PROFESSIONAL ENGINEER, ARCHITECT, LANDSCAPE ARCHITECT, OR LAND SURVEYOR, TO ALTER AN ITEM IN ANY WAY. IF AN ITEM BEARING THE STAMP OF A LICENSED PROFESSIONAL IS ALTERED, THE ALTERING ENGINEER, ARCHITECT, LANDSCAPE ARCHITECT, OR LAND SURVEYOR SHALL STAMP THE DOCUMENT AND INCLUDE THE NOTATION "ALTERED BY" FOLLOWED BY THEIR SIGNATURE, THE DATE OF SUCH ALTERATION, AND A SPECIFIC DESCRIPTION OF THE ALTERATION.

NEW YORK STATE OF OPPORTUNITY. Department of Transportation

DESIGN SUPERVISOR S. S. VAIDYA
JOB MANAGER R. F. SCHALLER
DESIGN P.M. LAUGEMAN
CHECK R. F. SCHALLER
DRAFTING P.M. LAUGEMAN
CHECK C. L. CRITES
PROJECT MANAGER S. S. VAIDYA
FILE NAME = 581361_CPH_HWY_TYP-5.dgn
DATE/TIME = 22-JUN-2021 12:31
USER = crites

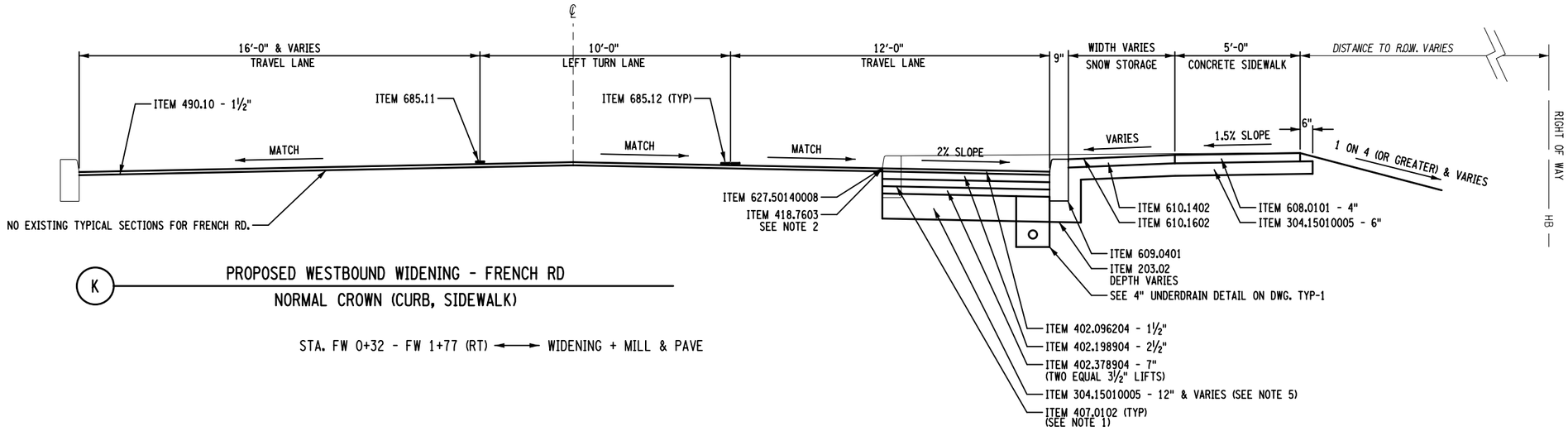

K

PROPOSED WESTBOUND WIDENING - FRENCH RD
NORMAL CROWN (CURB, SIDEWALK)

STA. FW 0+32 - FW 1+77 (RT) ⟷ WIDENING + MILL & PAVE

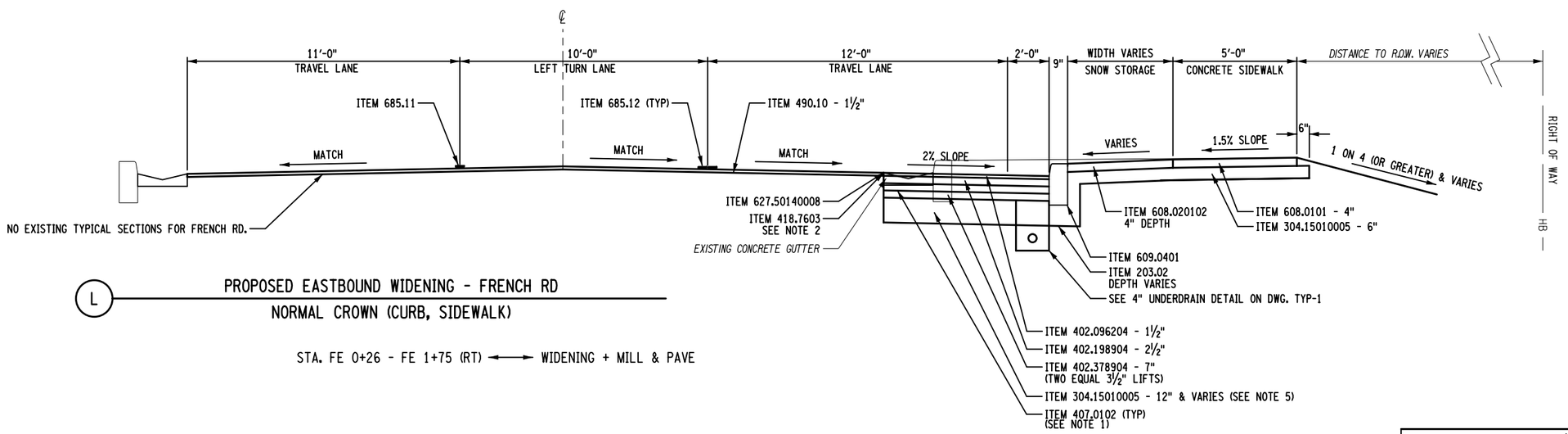

L

PROPOSED EASTBOUND WIDENING - FRENCH RD
NORMAL CROWN (CURB, SIDEWALK)

STA. FE 0+26 - FE 1+75 (RT) ⟷ WIDENING + MILL & PAVE

2 0 2 4 6 8 10'

1" = 5'

ITEM	DESCRIPTION	UNIT	ITEM	DESCRIPTION	UNIT
203.02	UNCLASSIFIED EXCAVATION & DISPOSAL	CY	608.020102	HMA SIDEWALKS, DRIVEWAYS, BIKE PATHS & VEGETATION CONTROL STRIPS	TON
304.15010005	SUBBASE COURSE, OPTIONAL TYPE (MODIFIED)	CY	609.0401	CAST-IN-PLACE CONCRETE CURB TYPE VF150	LF
402.096204	9.5 F2 TOP COURSE HMA, 60 SERIES COMPACTION	TON	610.1402	TOPSOIL - ROADSIDE	CY
402.198904	19 F9 BINDER COURSE HMA, 80 SERIES COMPACTION	TON	610.1602	TURF ESTABLISHMENT - LAWNS	SY
402.378904	37.5 F9 BASE COURSE HMA, 80 SERIES COMPACTION	TON	627.50140008	CUTTING PAVEMENT	LF
407.0102	DILUTED TACK COAT	GAL	685.11	WHITE EPOXY REFLECTORIZED PAVEMENT STRIPES - 20 MILS	LF
418.7603	ASPHALT PAVEMENT JOINT ADHESIVE	LF	685.12	YELLOW EPOXY RELECTORIZED PAVEMENT STRIPES - 20 MILS	LF
490.10	PRODUCTION COLD MILLING OF BITUMINOUS CONCRETE	SY			
608.0101	CONCRETE SIDEWALKS AND DRIVEWAYS	CY			

NOTES:

1. TACK COAT SHALL BE PLACED BETWEEN ALL ASPHALT SURFACES.
2. ASPHALT PAVEMENT JOINT ADHESIVE SHALL BE PLACED ALONG ALL VERTICAL FACES FOR ALL JOINTS ON THE SURFACE COURSE.
3. ANY EXISITNG UNDERDRAIN TRENCH BELOW PROPOSED SUBBASE SHALL BE EXCAVATED WITH ITEM 203.02 AND BACKFILLED WITH ITEM 203.03
4. SEE DWGS. STP-1 THRU STP-27 FOR STRIPING PLANS.
5. MATCH THE EXISTING SUBBASE ELEVATION (REFER TO CORE SAMPLES IN SUPPLEMENTAL INFORMATION). IF THE EXISTING SUBBASE IS DEEPER THAN WHAT THE PROPOSED DIMENSIONS SHOW IN THESE TYPICALS, ANY ADDITIONAL EXCAVATION NEEDED SHALL BE BACKFILLED WITH ITEM 304.15010005.
6. REFER TO DWG. TYP-3 FOR TABLE OF SECTIONS.

AFFIX SEAL:
ON:

ALTERED BY:
ON:

D264571

STATE OF NEW YORK
ROBERT F. SCHALLER
NO. 082465
LICENSED PROFESSIONAL ENGINEER

AS-BUILT REVISIONS
DESCRIPTION OF ALTERATIONS:

NY 78, TRANSIT ROAD, S.H. 1334A-1
FRENCH ROAD TO WEHRLE DRIVE
TOWNS OF CHEEKTOWAGA & LANCASTER
VILLAGE OF DEPEW
COUNTY: ERIE REGION: 05

PIN 5813.61
NY 78

BRIDGES

CULVERTS

ALL DIMENSIONS IN ft UNLESS OTHERWISE NOTED

TYPICAL SECTIONS
SHEET 6 OF 10

CONTRACT NUMBER
D264571

DRAWING NO. TYP-6
SHEET NO. 10

IT IS A VIOLATION OF LAW FOR ANY PERSON, UNLESS THEY ARE ACTING UNDER THE DIRECTION OF A LICENSED PROFESSIONAL ENGINEER, ARCHITECT, LANDSCAPE ARCHITECT, OR LAND SURVEYOR, TO ALTER AN ITEM IN ANY WAY. IF AN ITEM BEARING THE STAMP OF A LICENSED PROFESSIONAL IS ALTERED, THE ALTERING ENGINEER, ARCHITECT, LANDSCAPE ARCHITECT, OR LAND SURVEYOR SHALL STAMP THE DOCUMENT AND INCLUDE THE NOTATION "ALTERED BY" FOLLOWED BY THEIR SIGNATURE, THE DATE OF SUCH ALTERATION, AND A SPECIFIC DESCRIPTION OF THE ALTERATION.

NEW YORK STATE OF OPPORTUNITY. Department of Transportation

PROJECT MANAGER S. S. VAIDYA
CHECK C. L. CRITES
DRAFTING P.M. LAUGEMAN
CHECK R. F. SCHALLER
DESIGN P.M. LAUGEMAN
JOB MANAGER R. F. SCHALLER
DESIGN SUPERVISOR S. S. VAIDYA

FILE NAME = 581361_CPH_HWY_TYP-6.dgn
DATE/TIME = 22-JUN-2021 12:31
USER = cortes

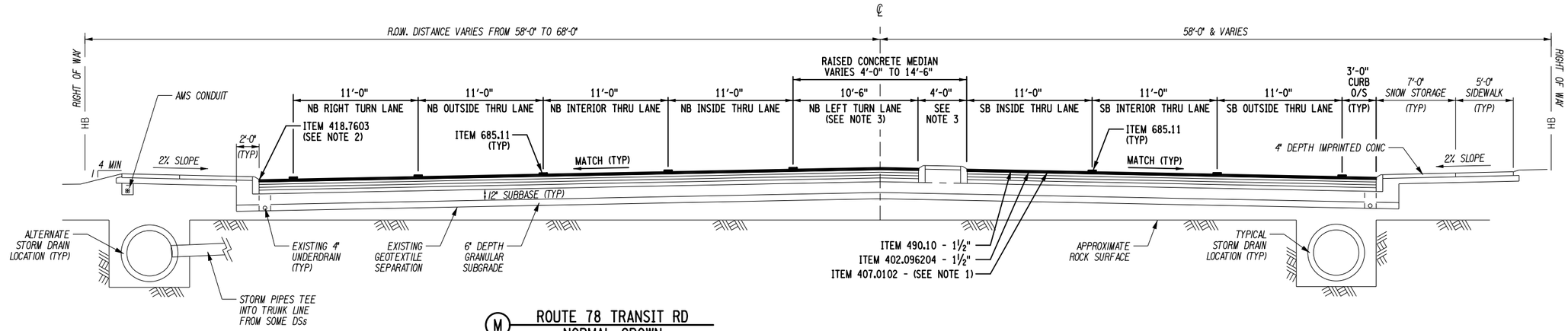

M ROUTE 78 TRANSIT RD
NORMAL CROWN

STA. 39+70 - 55+09± ⟷ MILL & PAVE ONLY

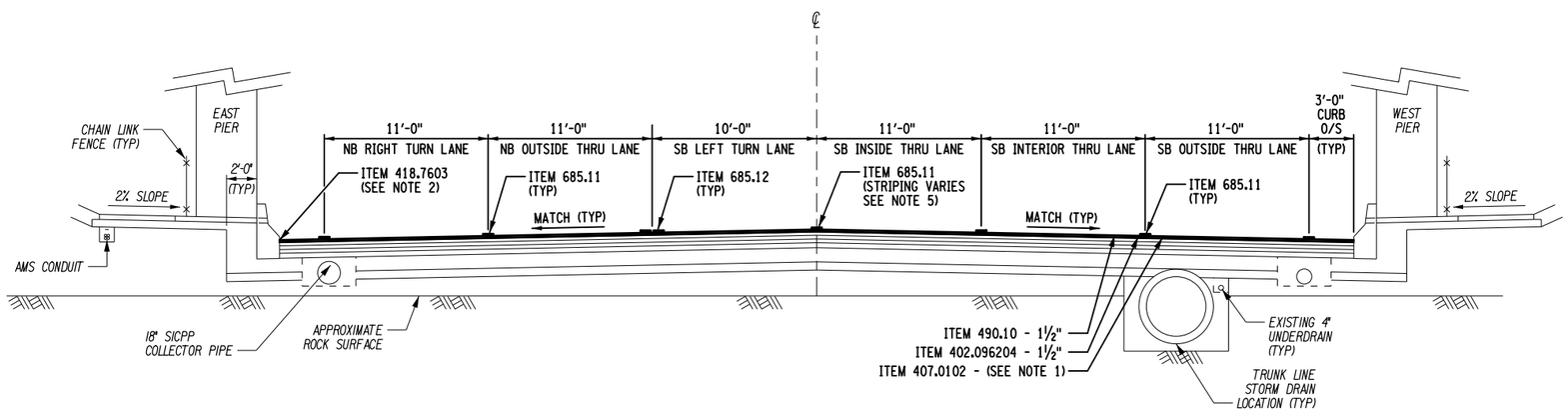

N ROUTE 78 TRANSIT RD
NORMAL CROWN

STA. 55+09 - 56+99± ⟷ MILL & PAVE ONLY

5 0 5 10 15 20'

1" = 10'

TABLE OF WIDTHS

LOCATION	FROM STA	WIDTH (FT)	TO STATION	WIDTH (FT)	AVG. WIDTH FT	LENGTH (FT)	AREA (SY)
TRANSIT RD (RT)	39+71	35.5	41+35	45.2	40.4	164	735.3
TRANSIT RD (LT)	39+71	39.1	40+20	35.3	37.2	49	202.5
TRANSIT RD (LT)	40+20	35.3	46+23	34.8	35.1	603	2348.4
TRANSIT RD (RT)	41+35	45.2	46+23	46.9	46.1	488	2496.9
TRANSIT RD	46+23	86.2	46+62	99.3	92.8	39	401.9
TRANSIT RD	46+62	99.3	47+90	102.1	100.7	128	1432.2
TRANSIT RD (RT)	47+90	38.8	55+10	35.5	37.2	720	2972.0
TRANSIT RD (LT)	47+90	58.8	51+33	56.6	57.7	343	2199.0
TRANSIT RD (LT)	51+33	56.6	55+10	26.6	41.6	377	1742.6
TRANSIT RD	55+10	69.5	57+52	69.3	69.4	242	1866.1
TRANSIT RD	57+52	69.3	60+76	87.0	78.2	324	2813.4
TRANSIT RD	60+76	87.0	64+71	88.5	87.8	395	3851.3
TRANSIT RD	64+71	88.5	65+47	106.4	97.5	76	822.9
TRANSIT RD	65+47	82.8	67+41	85.9	84.4	194	1818.2
TRANSIT RD (RT)	67+41	45.6	72+11	44.0	44.8	470	2339.6
TRANSIT RD (LT)	67+41	48.8	74+13	45.1	47.0	672	3505.6
TRANSIT RD (RT)	72+11	44.0	72+60	49.1	46.6	49	253.4
TRANSIT RD (RT)	72+60	49.1	74+13	48.9	49.0	153	833.0
TRANSIT RD	74+13	97.0	75+35	89.9	93.5	122	1266.8
TRANSIT RD	75+35	89.9	82+50	90.4	90.2	715	7161.9
TRANSIT RD	82+50	90.4	85+00	80.7	85.6	250	2376.4
TRANSIT RD	85+00	80.7	85+43	80.7	80.7	43	387.4
BIN 1074920							
TRANSIT RD	85+87	80.6	86+62	80	80.3	75	669.2
BIN 1074910							
TRANSIT RD	87+06	80.2	89+78	90.8	85.5	272	2584.0
TRANSIT RD	89+78	90.8	95+15	90.0	90.4	537	5393.9
TRANSIT RD	95+15	90.0	96+20	81.0	85.5	105	997.5
BIN 1030250							
TRANSIT RD	97+68	75.9	98+90	80.0	78.0	122	1056.7
TRANSIT RD	98+90	80.0	100+19	71.1	75.6	129	1082.9
TRANSIT RD	100+19	71.1	103+49	70.5	70.8	330	2596.0
TRANSIT RD	103+49	70.5	105+72	59.5	65.0	223	1610.6
TRANSIT RD	105+72	59.5	126+93	59.8	59.7	2121	14057.5
TRANSIT RD	126+93	59.8	127+17	71.6	65.7	24	175.2
TRANSIT RD	127+17	71.6	129+68	71.5	71.6	251	1995.5
TRANSIT RD	129+68	71.5	130+89	59.5	65.5	121	880.6
TRANSIT RD	130+89	59.5	169+46	59.8	59.7	3857	25563.3
TRANSIT RD	169+46	59.8	171+45	56.0	57.9	199	1280.2
TRANSIT RD	171+45	56.0	172+48	44.0	50.0	103	572.2
GENESEE RD	G 276+52	64.0	G 277+01	75.2	69.6	49	378.9
GENESEE RD	G 277+01	75.6	G 281+10	75.8	75.7	409	3440.1
GENESEE RD	G 281+10	75.8	G 284+81	89.8	82.8	371	3413.2
GENESEE RD	G 285+60	71.0	G 288+58	69.8	70.4	298	2331.0
GENESEE RD	G 288+58	69.8	G 291+42	32.9	51.4	284	1620.4
GENESEE RD	G 291+42	32.9	G 291+85	31.3	32.1	43	153.4
						TOTAL:	115679.0 SY

ITEM	DESCRIPTION	UNIT
402.096204	9.5 F2 TOP COURSE HMA, 60 SERIES COMPACTION	TON
407.0102	DILUTED TACK COAT	GAL
418.7603	ASPHALT PAVEMENT JOINT ADHESIVE	LF
490.10	PRODUCTION COLD MILLING OF BITUMINOUS CONCRETE	SY
685.11	WHITE EPOXY REFLECTORIZED PAVEMENT STRIPES - 20 MILS	LF
685.12	YELLOW EPOXY RELECTORIZED PAVEMENT STRIPES - 20 MILS	LF

NOTES:

1. TACK COAT SHALL BE PLACED BETWEEN ALL ASPHALT SURFACES.
2. ASPHALT PAVEMENT JOINT ADHESIVE SHALL BE PLACED ALONG ALL VERTICAL FACES FOR ALL JOINTS ON THE SURFACE COURSE.
3. MEDIAN AREA CAN BE MIRRORED FOR THE SOUTHBOUND SIDE AT LOCATIONS WHERE THE SOUTHBOUND DIRECTION OF TRAFFIC HAS THE DESIGNATED LEFT TURN LANE.
4. ALL SECTIONS AND ASSOCIATED STATIONING ON THIS SHEET WERE CONVERTED USING A METRIC PROJECT FROM 2006 (D260326) AND SHALL BE CONSIDERED APPROXIMATE.
5. SEE DWGS. STP-1 THRU STP-27 FOR STRIPING PLANS.
6. SEE DWG. TYP-3 FOR TABLE OF SECTIONS.

AFFIX SEAL:
ON:

ALTERED BY:
ON:

D264571
STATE OF NEW YORK
ROBERT F. SCHALLER
NO. 082465
LICENSED PROFESSIONAL ENGINEER

AS-BUILT REVISIONS
DESCRIPTION OF ALTERATIONS:

NY 78, TRANSIT ROAD, S.H. 1334A-1
FRENCH ROAD TO WEHRLE DRIVE
TOWNS OF CHEEKTOWAGA & LANCASTER
VILLAGE OF DEPEW
COUNTY: ERIE REGION: 05

PIN 5813.61
NY 78

BRIDGES

CULVERTS

ALL DIMENSIONS IN ft UNLESS OTHERWISE NOTED

TYPICAL SECTIONS
SHEET 7 OF 10

CONTRACT NUMBER
D264571

DRAWING NO. TYP-7
SHEET NO. 11

IT IS A VIOLATION OF LAW FOR ANY PERSON, UNLESS THEY ARE ACTING UNDER THE DIRECTION OF A LICENSED PROFESSIONAL ENGINEER, ARCHITECT, LANDSCAPE ARCHITECT, OR LAND SURVEYOR, TO ALTER AN ITEM IN ANY WAY. IF AN ITEM BEARING THE STAMP OF A LICENSED PROFESSIONAL IS ALTERED, THE ALTERING ENGINEER, ARCHITECT, LANDSCAPE ARCHITECT, OR LAND SURVEYOR SHALL STAMP THE DOCUMENT AND INCLUDE THE NOTATION "ALTERED BY" FOLLOWED BY THEIR SIGNATURE, THE DATE OF SUCH ALTERATION, AND A SPECIFIC DESCRIPTION OF THE ALTERATION.

NEW YORK STATE OF OPPORTUNITY. Department of Transportation

PROJECT MANAGER S. S. VAIDYA
CHECK C. L. CRITES
DRAFTING P. M. LAUGEMAN
CHECK R. F. SCHALLER
DESIGN P. M. LAUGEMAN
JOB MANAGER R. F. SCHALLER
DESIGN SUPERVISOR S. S. VAIDYA
FILE NAME = 581361_CPH_HWY_TYP-7.dgn
DATE/TIME = 22-JUN-2021 12:31
USER = corites

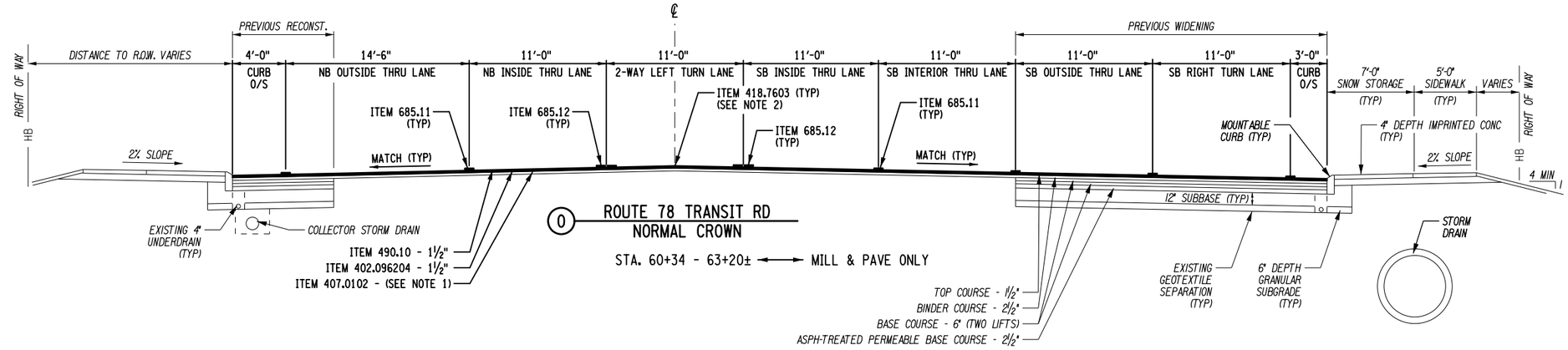

(O) ROUTE 78 TRANSIT RD
NORMAL CROWN

STA. 60+34 - 63+20± ⟷ MILL & PAVE ONLY

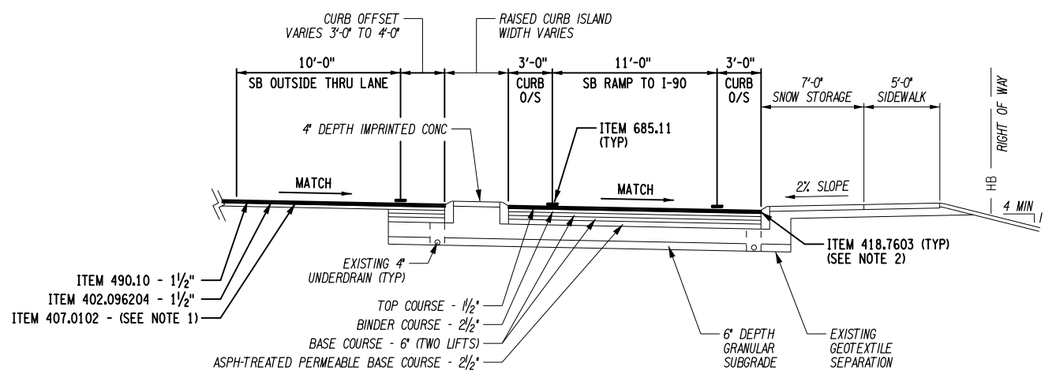

(P) I-90 ENTRANCE RAMP (FROM) TRANSIT RD
MILL & PAVE ONLY

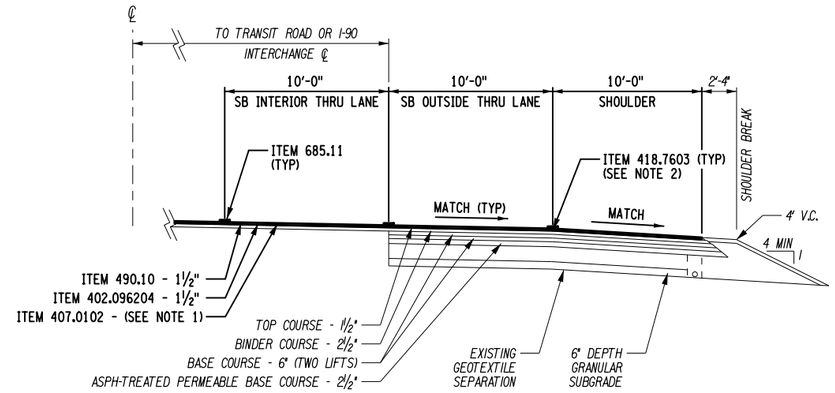

(Q) TRANSIT RD & I-90 INTERCHANGE (SHOULDER SECTION)
MILL & PAVE ONLY

5 0 5 10 15 20'
1" = 10'

ITEM	DESCRIPTION	UNIT	ITEM	DESCRIPTION	UNIT
402.096204	9.5 F2 TOP COURSE HMA, 60 SERIES COMPACTION	TON			
407.0102	DILUTED TACK COAT	GAL			
418.7603	ASPHALT PAVEMENT JOINT ADHESIVE	LF			
490.10	PRODUCTION COLD MILLING OF BITUMINOUS CONCRETE	SY			
685.11	WHITE EPOXY REFLECTORIZED PAVEMENT STRIPES - 20 MILS	LF			
685.12	YELLOW EPOXY RELECTORIZED PAVEMENT STRIPES - 20 MILS	LF			

NOTES:
1. TACK COAT SHALL BE PLACED BETWEEN ALL ASPHALT SURFACES.
2. ASPHALT PAVEMENT JOINT ADHESIVE SHALL BE PLACED ALONG ALL VERTICAL FACES FOR ALL JOINTS ON THE SURFACE COURSE.
3. ALL SECTIONS AND ASSOCIATED STATIONING ON THIS SHEET WERE CONVERTED USING A METRIC PROJECT FROM 2006 (D260326) AND SHALL BE CONSIDERED APPROXIMATE.
4. SEE DWGS. STP-1 THRU STP-27 FOR STRIPING PLANS.
5. SEE DWG. TYP-3 FOR TABLE OF SECTIONS.

AFFIX SEAL:
ON:

ALTERED BY:
ON:

D264571
STATE OF NEW YORK
ROBERT F. SCHALLER
NO. 082465
LICENSED PROFESSIONAL ENGINEER

AS-BUILT REVISIONS
DESCRIPTION OF ALTERATIONS:

NY 78, TRANSIT ROAD, S.H. 1334A-1
FRENCH ROAD TO WEHRLE DRIVE
TOWNS OF CHEEKTOWAGA & LANCASTER
VILLAGE OF DEPEW
COUNTY: ERIE REGION: 05

PIN 5813.61
NY 78

BRIDGES

CULVERTS

ALL DIMENSIONS IN ft UNLESS OTHERWISE NOTED

TYPICAL SECTIONS
SHEET 8 OF 10

CONTRACT NUMBER
D264571

DRAWING NO. TYP-8
SHEET NO. 12

IT IS A VIOLATION OF LAW FOR ANY PERSON, UNLESS THEY ARE ACTING UNDER THE DIRECTION OF A LICENSED PROFESSIONAL ENGINEER, ARCHITECT, LANDSCAPE ARCHITECT, OR LAND SURVEYOR, TO ALTER AN ITEM IN ANY WAY. IF AN ITEM BEARING THE STAMP OF A LICENSED PROFESSIONAL IS ALTERED, THE ALTERING ENGINEER, ARCHITECT, LANDSCAPE ARCHITECT, OR LAND SURVEYOR SHALL STAMP THE DOCUMENT AND INCLUDE THE NOTATION "ALTERED BY" FOLLOWED BY THEIR SIGNATURE, THE DATE OF SUCH ALTERATION, AND A SPECIFIC DESCRIPTION OF THE ALTERATION.

NEW YORK STATE OF OPPORTUNITY. Department of Transportation

DESIGN SUPERVISOR S. S. VAIDYA JOB MANAGER R. F. SCHALLER DESIGN P. M. LAUGEMAN DRAFTING P. M. LAUGEMAN CHECK R. F. SCHALLER CHECK C. L. CRITES PROJECT MANAGER S. S. VAIDYA
FILE NAME = 581361_CPH_HWY_TYP-8.dgn
DATE/TIME = 22-JUN-2021 12:31
USER = ccrites

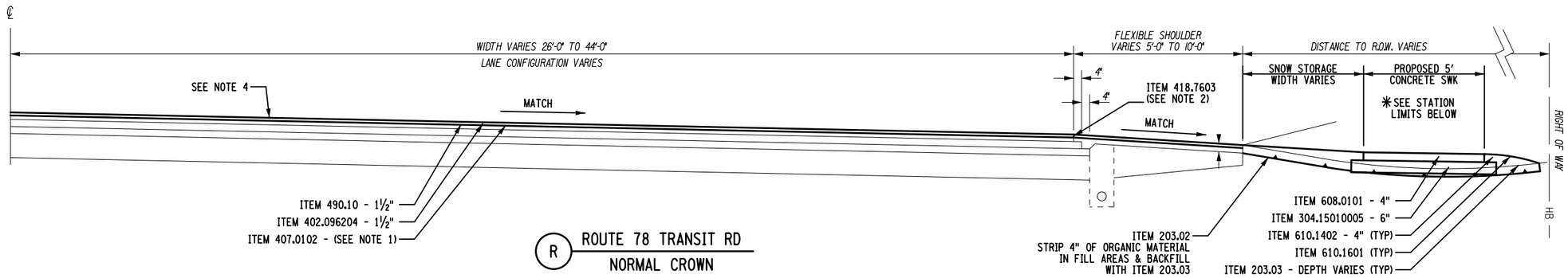

R ROUTE 78 TRANSIT RD
NORMAL CROWN

STA. 63+20 - 68+25 (LT) ⟷ ✳ PROPOSED SWK BEGINS APPROX. STA. 67+27
STA. 63+20 - 67+75 (RT) ⟷ ✳ PROPOSED SWK BEGINS APPROX. STA. 67+23
STA. 95+40 - 96+20 (LT) ⟷ MILL & PAVE ONLY

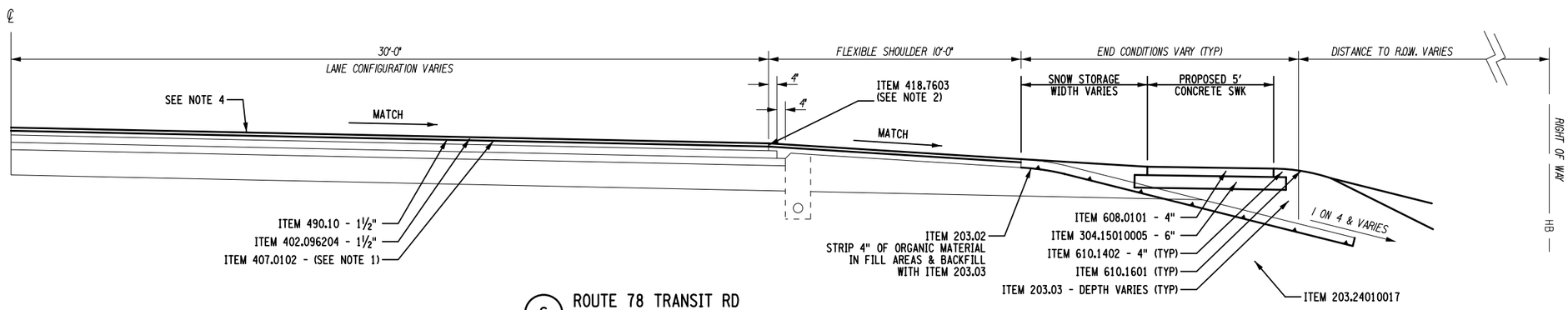

S ROUTE 78 TRANSIT RD
NORMAL CROWN

STA. 68+25 - 95+40 (LT) ⟷ MILL & PAVE ONLY
STA. 67+75 - 69+69 (RT) ⟷ REFER TO SECTIONS A & B FOR PROPOSED SECTIONS PAST THIS POINT (WIDENING BEGINS)

2 0 2 4 6 8 10'
1" = 5'

ITEM	DESCRIPTION	UNIT
203.02	UNCLASSIFIED EXCAVATION & DISPOSAL	CY
203.03	EMBANKMENT IN PLACE	CY
304.15010005	SUBBASE COURSE, OPTIONAL TYPE	CY
402.096204	9.5 F2 TOP COURSE HMA, 60 SERIES COMPACTION	TON
407.0102	DILUTED TACK COAT	GAL
418.7603	ASPHALT PAVEMENT JOINT ADHESIVE	LF
490.10	PRODUCTION COLD MILLING OF BITUMINOUS CONCRETE	SY
608.0101	CONCRETE SIDEWALKS & DRIVEWAYS	CY
610.1402	TOPSOIL - ROADSIDE	CY

ITEM	DESCRIPTION	UNIT
610.1601	TURF ESTABLISHMENT - ROADSIDE	CY

NOTES:
1. TACK COAT SHALL BE PLACED BETWEEN ALL ASPHALT SURFACES.
2. ASPHALT PAVEMENT JOINT ADHESIVE SHALL BE PLACED ALONG ALL VERTICAL FACES FOR ALL JOINTS ON THE SURFACE COURSE,
3. ALL SECTIONS AND ASSOCIATED STATIONING ON THIS SHEET WERE OBTAINED FROM 1994 (D254088) AND SHALL BE CONSIDERED APPROXIMATE.
4. SEE DWGS. STP-1 THRU STP-27 FOR STRIPING PLANS.
5. SEE DWG. TYP-3 FOR TABLE OF SECTIONS.

AFFIX SEAL:
ON:

ALTERED BY:
ON:

D264571
STATE OF NEW YORK
ROBERT F. SCHALLER
NO. 082465
LICENSED PROFESSIONAL ENGINEER

AS-BUILT REVISIONS
DESCRIPTION OF ALTERATIONS:

NY 78, TRANSIT ROAD, S.H. 1334A-1
FRENCH ROAD TO WEHRLE DRIVE
TOWNS OF CHEEKTOWAGA & LANCASTER
VILLAGE OF DEPEW
COUNTY: ERIE REGION: 05

PIN 5813.61
NY 78

BRIDGES

CULVERTS

ALL DIMENSIONS IN ft UNLESS OTHERWISE NOTED

TYPICAL SECTIONS
SHEET 9 OF 10

CONTRACT NUMBER
D264571

DRAWING NO. TYP-9
SHEET NO. 13

IT IS A VIOLATION OF LAW FOR ANY PERSON, UNLESS THEY ARE ACTING UNDER THE DIRECTION OF A LICENSED PROFESSIONAL ENGINEER, ARCHITECT, LANDSCAPE ARCHITECT, OR LAND SURVEYOR, TO ALTER AN ITEM IN ANY WAY. IF AN ITEM BEARING THE STAMP OF A LICENSED PROFESSIONAL IS ALTERED, THE ALTERING ENGINEER, ARCHITECT, LANDSCAPE ARCHITECT, OR LAND SURVEYOR SHALL STAMP THE DOCUMENT AND INCLUDE THE NOTATION "ALTERED BY" FOLLOWED BY THEIR SIGNATURE, THE DATE OF SUCH ALTERATION, AND A SPECIFIC DESCRIPTION OF THE ALTERATION.

NEW YORK STATE OF OPPORTUNITY. Department of Transportation

PROJECT MANAGER S. S. VAIDYA
CHECK C. L. CRITES
DRAFTING P. M. LAUGEMAN
CHECK R. F. SCHALLER
DESIGN P. M. LAUGEMAN
JOB MANAGER R. F. SCHALLER
DESIGN SUPERVISOR S. S. VAIDYA
FILE NAME = 581361_CPH_HWY_TYP-9.dgn
DATE/TIME = 22-JUN-2021 12:31
USER = cortes

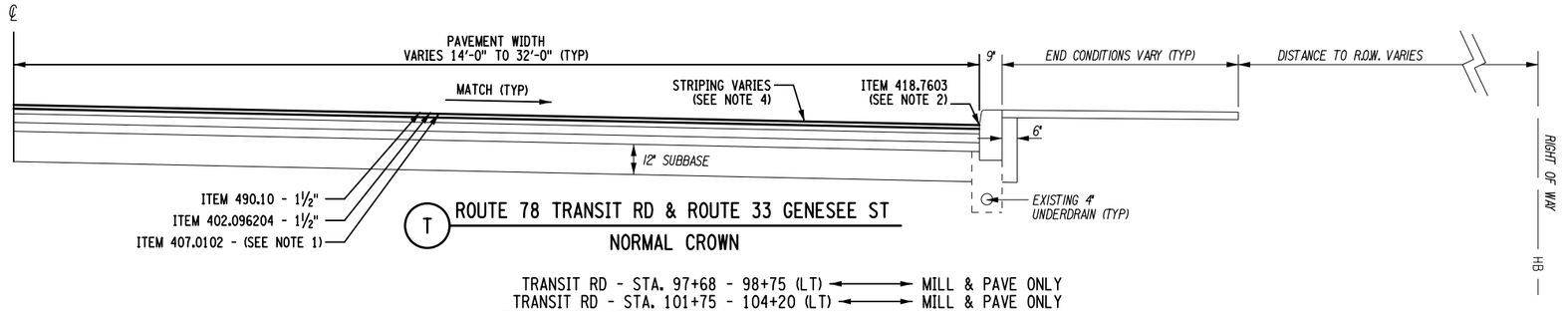

T ROUTE 78 TRANSIT RD & ROUTE 33 GENESEE ST

NORMAL CROWN

TRANSIT RD - STA. 97+68 - 98+75 (LT) ⟷ MILL & PAVE ONLY
TRANSIT RD - STA. 101+75 - 104+20 (LT) ⟷ MILL & PAVE ONLY
GENESEE ST - STA. G 285+58 - G 291+85 (RT) ⟷ MILL & PAVE ONLY

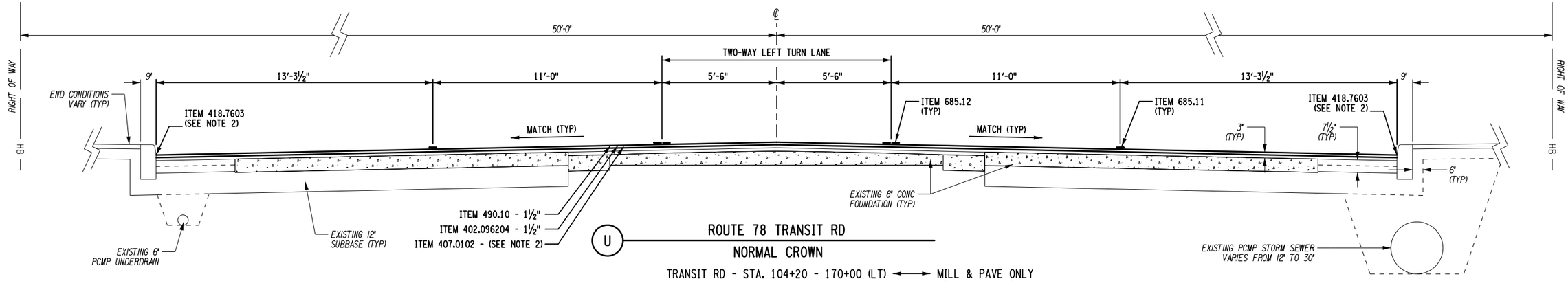

U ROUTE 78 TRANSIT RD

NORMAL CROWN

TRANSIT RD - STA. 104+20 - 170+00 (LT) ⟷ MILL & PAVE ONLY
TRANSIT RD - STA. 105+72 - 170+00 (RT) ⟷ MILL & PAVE ONLY

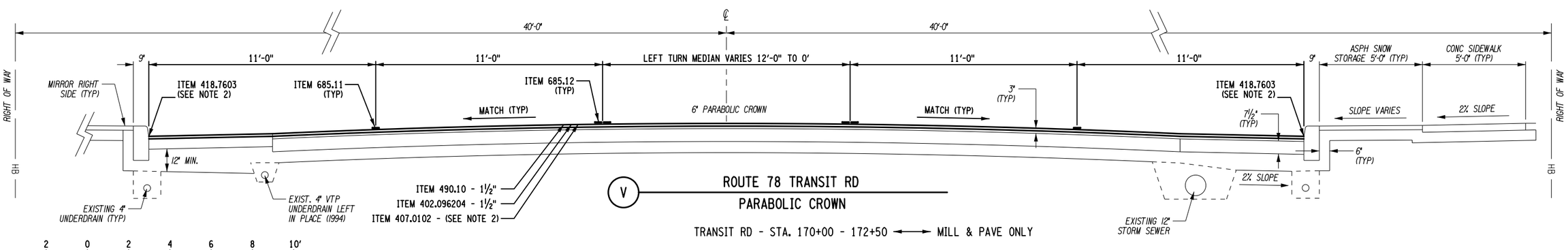

V ROUTE 78 TRANSIT RD

PARABOLIC CROWN

TRANSIT RD - STA. 170+00 - 172+50 ⟷ MILL & PAVE ONLY

2 0 2 4 6 8 10'

1" = 5'

ITEM	DESCRIPTION	UNIT	ITEM	DESCRIPTION	UNIT
402.096204	9.5 F2 TOP COURSE HMA, 60 SERIES COMPACTION	TON			
407.0102	DILUTED TACK COAT	GAL			
418.7603	ASPHALT PAVEMENT JOINT ADHESIVE	LF			
490.10	PRODUCTION COLD MILLING OF BITUMINOUS CONCRETE	SY			
685.11	WHITE EPOXY REFLECTORIZED PAVEMENT STRIPS - 20 MILS	LF			
685.12	YELLOW EPOXY REFLECTORIZED PAVEMENT STRIPES - 20 MILS	LF			

NOTES:

1. TACK COAT SHALL BE PLACED BETWEEN ALL ASPHALT SURFACES.
2. ASPHALT PAVEMENT JOINT ADHESIVE SHALL BE PLACED ALONG ALL VERTICAL FACES FOR ALL JOINTS ON THE SURFACE COURSE.
3. ALL SECTIONS AND ASSOCIATED STATIONING ON THIS SHEET WERE OBTAINED FROM 1994 (D254088) AND SHALL BE CONSIDERED APPROXIMATE.
4. SEE DWGS. STP-1 THRU STP-27 FOR STRIPING PLANS.
5. SEE DWG. TYP-3 FOR TABLE OF SECTIONS.

AFFIX SEAL:
ON:

ALTERED BY:
ON:

D264571
STATE OF NEW YORK
ROBERT F. SCHALLER
NO. 082465
LICENSED PROFESSIONAL ENGINEER

AS-BUILT REVISIONS
DESCRIPTION OF ALTERATIONS:

NY 78, TRANSIT ROAD, S.H. 1334A-1
FRENCH ROAD TO WEHRLE DRIVE
TOWNS OF CHEEKTOWAGA & LANCASTER
VILLAGE OF DEPEW
COUNTY: ERIE REGION: 05

PIN 5813.61
NY 78

BRIDGES

CULVERTS

ALL DIMENSIONS IN ft UNLESS OTHERWISE NOTED

TYPICAL SECTIONS
SHEET 10 OF 10

CONTRACT NUMBER
DXXXXXX

DRAWING NO. TYP-10
SHEET NO. 14

IT IS A VIOLATION OF LAW FOR ANY PERSON, UNLESS THEY ARE ACTING UNDER THE DIRECTION OF A LICENSED PROFESSIONAL ENGINEER, ARCHITECT, LANDSCAPE ARCHITECT, OR LAND SURVEYOR, TO ALTER AN ITEM IN ANY WAY. IF AN ITEM BEARING THE STAMP OF A LICENSED PROFESSIONAL IS ALTERED, THE ALTERING ENGINEER, ARCHITECT, LANDSCAPE ARCHITECT, OR LAND SURVEYOR SHALL STAMP THE DOCUMENT AND INCLUDE THE NOTATION "ALTERED BY" FOLLOWED BY THEIR SIGNATURE, THE DATE OF SUCH ALTERATION, AND A SPECIFIC DESCRIPTION OF THE ALTERATION.

NEW YORK STATE OF OPPORTUNITY. Department of Transportation

DESIGN SUPERVISOR S. S. VAIDYA JOB MANAGER R. F. SCHALLER DESIGN P. M. LAUGEMAN CHECK R. F. SCHALLER DRAFTING P. M. LAUGEMAN CHECK R. F. SCHALLER PROJECT MANAGER S. S. VAIDYA

FILE NAME = 581361_CPH_HWY_TYP-10.dgn
DATE/TIME = 22-JUN-2021 12:31
USER = ccrites

GENERAL MISCELLANEOUS NOTES:

1. ITEM 610.1602, TURF ESTABLISHING LAWNS SHALL BE PAID FOR DISTURBED AREAS AS SHOWN IN THE CONTRACT PLANS AND/OR TABLES. ANY DISTURBANCE OUTSIDE THESE AREAS, AS DETERMINED BY THE EIC, SHALL BE THE CONTRACTOR'S RESPONSIBILITY AND SHALL BE RESTORED AS PER SECTION 107-08 OF THE NYSDOT STANDARD SPECIFICATIONS, PROTECTION AND RESTORATION OF PROPERTY AND LANDSCAPE.

2. THESE CONTRACT DOCUMENTS HAVE BEEN PREPARED BASED ON PREVIOUS CONTRACTS AND FIELD INSPECTIONS. THEREFORE, THE EXACT EXTENT OF PROPOSED WORK MAY NOT ALWAYS BE ACCURATELY DEPICTED. THE CONTRACTOR SHOULD BE AWARE THAT ACTUAL FIELD CONDITIONS MAY REQUIRE MODIFICATION TO CONSTRUCTION DETAILS AND QUANTITIES.

GENERAL PAVING NOTES:

1. ALL PAVING OR SHOULDER MATERIAL SHALL BE INSTALLED IN THE DIRECTION OF FLOW OF TRAFFIC. TRUCKS HAULING MATERIAL FOR A GIVEN OPERATION SHALL PROCEED TO THE PLACEMENT EQUIPMENT WITH THE FLOW OF TRAFFIC.

2. THE CONTRACTOR SHALL BE RESPONSIBLE FOR ANY LAYOUT NECESSARY TO PRESERVE, MAINTAIN AND REESTABLISH THE EXISTING PAVEMENT CROWN POINTS, LANE WIDTHS, CROSS SLOPES, TRANSITIONS AND SUPER ELEVATIONS AS DESCRIBED IN THE CONTRACT DOCUMENTS AND/OR A.D.B.E. THE COST FOR THIS WORK IS TO BE INCLUDED IN THE PRICE BID FOR THE PAVING ITEMS.

3. AT INTERSECTIONS AND PROJECT TERMINI, THE CONTRACTOR SHALL MILL TO LINE AND GRADE AS DIRECTED BY THE ENGINEER-IN-CHARGE TO PROVIDE FOR A SMOOTH TRANSITION BETWEEN NEW AND EXISTING SURFACES. SEE STANDARD SHEET 402-01 FOR MILLED REBATE DETAIL.

4. WHEN APPURTENANCES SUCH AS CATCH BASINS OR UTILITY VAULTS ARE ENCOUNTERED, THE OVERLAY SHALL BE FEATHERED TO MEET EXISTING GRADE AT THE CASTING. FEATHERING SHOULD OCCUR AT A RATE NOT TO EXCEED 4%, UNLESS THE APPURTENANCE IS TO BE ADJUSTED AS PROVIDED ELSEWHERE IN THIS CONTRACT.

5. ASPHALT JOINTS SHALL NOT BE ALLOWED IN ANY WHEEL PATH. THROUGHOUT THE PAVEMENT LENGTH, THE TOP COURSE SHALL BE MONOLITHICALLY PLACED OVER THE TRAVEL LANE AND SHOULDER OR CURB OFFSET UNLESS DIRECTED OTHERWISE BY THE ENGINEER.

6. CARE SHALL BE EXERCISED DURING MILLING, SWEEPING AND/OR PAVING OPERATIONS TO PREVENT MILLED MATERIAL AND/OR HOT MIX ASPHALT MATERIAL FROM ENTERING DRAINAGE INLETS. SHOULD ANY OF THESE MATERIALS ENTER THE DRAINAGE STRUCTURE, THE CONTRACTOR SHALL REMOVE THESE MATERIALS AT NO ADDITIONAL COST THE STATE.

7. MILLING AND PAVING OPERATIONS SHALL BE PROGRESSED IN A SEGMENT BY SEGMENT BASIS. SEGMENTS SHALL CONSIST OF DIRECTIONAL FULL-WIDTH, NO LONGITUDINAL PAVING JOINTS OR MILLING EDGES SHALL BE ALLOWED IN THE THROUGH TRAVEL LANES. THE SEGMENTS SHALL BE BASED ON THE CONTRACTOR'S DAILY WORK CAPACITY AND SHALL NOT END WITHIN AN INTERSECTION.

8. THE FINAL PAVED SURFACE SHALL INCLUDE A 1" DEPRESSION AT ALL CURB INLET DRAINAGE STRUCTURES. REFER TO THE NOTE TITLED "TYPICAL ELEVATION AT CURB FACE" ON DWG. DDT-1.

PAVEMENT RESTORATION NOTE:

1. FOR ANY WORK DONE IN THE ASPHALT ROADWAY AREAS, ITEM 402.198904 (BINDER) MAY BE USED IN PLACE OF ITEM 402.096204 (TOP) UNTIL THE FINAL MILLING AND PAVING OPERATIONS.

GENERAL WORK ZONE TRAFFIC CONTROL NOTES:

1. NO LANE CLOSURES WILL BE ALLOWED DURING NON-WORKING HOURS. NO LONGITUDINAL LANE DROP-OFFS WILL BE ALLOWED AT THE END OF EACH WORK DAY. THE CONTRACTOR SHALL PROGRESS OPERATIONS IN A MANNER WHICH WILL PROVIDE THAT THE OPERATION BEING PERFORMED ON A PARTICULAR SECTION OF ROADWAY WILL BE COMPLETED AT THE END OF EACH WORKDAY OR PROVIDE OVERNIGHT PLATING UNLESS OTHERWISE APPROVED BY THE ENGINEER IN CHARGE.

2. THE CONTRACTOR SHALL NOT MIX DELINEATION DEVICES IN A LINEAR CLOSURE OR TAPER. HOWEVER, DIFFERENT DELINEATION DEVICES MAY BE USED IN DIFFERENT AREAS OF THE PROJECT.

3. VEHICLES BELONGING TO THE CONTRACTOR OR WORKERS SHALL NOT BE PARKED ON THE PAVEMENT OR SHOULDERS ALONG A ROADWAY BEING USED BY THE GENERAL PUBLIC WITHIN THE PROJECT LIMITS.

4. ALL TRAVEL AND PARKING LANES SHALL BE CLEARED OF ALL OBSTRUCTIONS, INCLUDING TRAFFIC CONTROL DEVICES, AND MADE SAFE FOR TRAVEL AND RETURNED TO SERVICE AT THE CONCLUSION OF EACH WORKDAY.

5. WHEN TYPE III BARRICADES ARE USED NEAR DRIVEWAYS OR INTERSECTIONS THEY SHALL BE PLACED IN SUCH A WAY AS TO NOT OBSCURE SIGHT DISTANCE.

6. SHOULDER CLOSURE SHALL REMAIN IN EFFECT WHEN THERE IS A LIP AT THE EDGE OF TRAVEL DUE TO MILLING.

7. SIGN LOCATIONS ARE APPROXIMATE; EXACT LOCATIONS SHALL BE DETERMINED BY THE PROJECT ENGINEER.

8. THE FLAGGER STATION AND LANE CLOSURES SHOULD BE LOCATED TO ENSURE MAXIMUM VISIBILITY.

9. "FLAGGER" SIGNS SHALL BE USED WHENEVER FLAGGING OCCURS FOR MORE THAN A BRIEF PERIOD OF TIME. THE SIGN SHALL BE PROMPTLY REMOVED, COVERED OR TURNED AWAY FROM TRAFFIC WHEN THE FLAGGING OPERATION CEASES.

10. THE CONTRACTOR IS ADVISED THAT PVMS BOARDS SHALL BE USED AT EACH END OF THE PROJECT WHILE WORK IS BEING PERFORMED.

11. TEST THE PVMS'S CELLULAR COMMUNICATION LINK TWO WEEKS PRIOR TO ANTICIPATED USE. CONTACT NITTEC AT 716-847-2070 (24-7). SEE "NITTEC PORTABLE VMS, REQUEST FOR SERVICE" FORM.

12. MESSAGES FOR THE PVMS ARE TO BE UPLOADED BY NITTEC (716-847-2070, 24-7) PER EIC REQUEST.

13. USE THE PVMS TO NOTIFY THE TRAVELING PUBLIC OF ROADWORK WITH THE MESSAGE(S) IN THE TABLES BELOW. REFER TO DWG. WZ1-1 THRU WZ6B-1 FOR PVMS LOCATIONS.

14. PAYMENT FOR TYPE III CONSTRUCTION BARRICADES SHALL BE INCLUDED IN THE PRICE BID FOR ITEM 619.01 FOR CONSTRUCTION OF CURB RAMPS. REFER TO DWG. MST-8 FOR PAID LOCATIONS FOR THIS ITEM.

MILL AND PAVE PVMS MESSAGING		
MESSAGE 1	MESSAGE 2	DURATION
ROAD WORK STARTS XX/XX/XX	EXPECT DELAYS	PRE-CONSTRUCTION: ONE WEEK PRIOR
GROOVED PAVEMENT AHEAD	BIKERS USE CAUTION	FOR THE DURATION OF EXPOSED GROOVED SURFACE

NOTE: DURING OTHER OPERATIONS, PVMS SHOULD DISPLAY REAL TIME INFORMATION.

WIDENING PVMS MESSAGING		
MESSAGE 1	MESSAGE 2	DURATION
ROAD WORK STARTS XX/XX/XX	EXPECT DELAYS	PRE-CONSTRUCTION: ONE WEEK PRIOR
ROAD WORK AHEAD	USE CAUTION	DURATION OF WIDENING CONSTRUCTION

NOTE: DURING OTHER OPERATIONS, PVMS SHOULD DISPLAY REAL TIME INFORMATION.

GENERAL PAVEMENT MARKING NOTES:

1. THE CONTRACTOR IS RESPONSIBLE FOR MAINTAINING THE TEMPORARY PAVEMENT MARKINGS BEFORE THE FINAL STRIPING IS APPLIED. ANY AREAS THAT THE ENGINEER DEEMS NECESSARY TO BE RESTRIPED SHALL BE COMPLETED BEFORE THE END OF THE WORK DAY. SEE "TEMPORARY PAVEMENT MARKINGS, STRIPES" NOTES BELOW.

TEMPORARY PAVEMENT MARKINGS, STRIPES:

1. THE CONTRACTOR IS RESPONSIBLE FOR MAINTAINING THE TEMPORARY PAVEMENT MARKINGS BEFORE THE FINAL STRIPING IS APPLIED. ANY AREAS THAT THE ENGINEER DEEMS NECESSARY TO BE RESTRIPED SHALL BE COMPLETED BEFORE THE END OF THE WORK DAY. CONTRACT ITEMS USED:

   A. ITEM 619.0901 TEMPORARY PAVEMENT MARKINGS, STRIPES (TRAFFIC PAINT) THIS ITEM IS USED TO PROVIDE TEMPORARY MARKINGS ON MILLED SURFACES.

   B. ITEM 640.10 & 640.11 WHITE/YELLOW PAINT REFLECTORIZED PAVEMENT STRIPES 15 MILS IF FINAL EPOXY MARKINGS CANNOT BE PALCED AT THE COMPLETION OF DAILY PAVING OPERATION, THEN THESE ITEMS WILL BE USED TO PROVIDE TEMPORARY MARKINGS UNTIL THE FINAL EPOXY MARKINGS STRIPES CAN BE PLACED.

RIGHT OF WAY NOTES:

1. ALL WORK TO BE PERFORMED UNDER THIS CONTRACT WILL BE WITHIN THE PUBLIC RIGHT-OF-WAY (ROW) IN ACCORDANCE WITH SECTION 105-15 OF THE STANDARD SPECIFICATIONS. THE CONTRACTOR IS TO ASSURE HIMSELF THAT ALL WORK IS BEING PERFORMED WITHIN THE ROW, INCLUDING BUT NOT LIMITED TO VEHICLE ACCESS; STORAGE OF EQUIPMENT, MATERIALS, DEBRIS AND WASTE; LANDSCAPING; VEGETATION REMOVAL AND MANAGEMENT; GRADING, SEEDING AND THE INSTALLATION OF TURF; AND THE INSTALLATION OF ANY FENCES OR PROTECTIVE BARRIER.

2. IF CONTRACTOR IS UNABLE TO IDENTIFY THE LIMITS OF THE RIGHTS-OF-WAY WHEN THE CONTRACT CALLS FOR WORK IN THOSE VICINITIES, THE CONTRACTOR MUST CONTACT THE PROJECT ENGINEER FOR DEFINITIVE BOUNDARY DETERMINATIONS BEFORE ANY WORK MAY BE INITIATED AT THOSE LOCATIONS (STANDARD SPECIFICATIONS SECTIONS 105-10 AND 625).

3. IN ACCORDANCE WITH SECTION 105-15 OF THE STANDARD SPECIFICATIONS, RELEASES FOR ANY NON-ESSENTIAL CONTRACT WORK OUTSIDE OF THE EXISTING RIGHTS-OF-WAY, INCLUDING PLANTINGS, LANDSCAPING OR DRIVEWAY ENHANCEMENT, WILL BE PROVIDED BY THE PROJECT ENGINEER AND IN NO INSTANCE ARE TO BE SECURED BY THE CONTRACTOR. THE CONTRACTOR SHALL NOT INVADE UPON PRIVATE PROPERTIES, LANDS OR BUILDINGS OUTSIDE OF THE RIGHTS-OF-WAY FOR ANY REASON WITHOUT FIRST SECURING WRITTEN PERMISSION FROM THE PROPERTY OWNER (STANDARD SPECIFICATIONS SECTION 105-15).

4. THE CONTRACTOR WILL BE HELD LIABLE FOR ANY DAMAGES DONE. ANY SUCH INJURIES OR DAMAGES SHALL BE SATISFACTORILY REPAIRED OR ITEMS REPLACED AT THE CONTRACTOR'S EXPENSE (STANDARD SPECIFICATIONS SECTION 107-08).

PEDESTRIAN & BICYCLIST ACCOMMODATION THROUGH WORK ZONES:

1. THE CONTRACTOR SHALL ENSURE THAT CONSTRUCTION ACTIVITIES DO NOT INTERFERE WITH THE ABILITY OF PEDESTRIANS/BICYCLISTS TO MOVE THROUGH THE WORK ZONE. IN AREAS WITH SIDEWALKS AND CURB RAMPS THE PEDESTRIAN/BIKE PATH THROUGH THE WORK ZONE SHALL MAINTAIN ACCESSIBILITY AS DEFINED IN SECTION 619-3.01C OF THE NYSDOT STANDARD SPECIFICATIONS AND AMERICANS WITH DISABILITY ACT ACCESSIBILITY GUIDELINES (ADAAG). THE CONTRACTOR SHALL NOT DIVERT PEDESTRIAN/BIKE TRAFFIC ONTO GRASSED AREAS OR OTHER AREAS THAT ARE NOT FIRM AND STABLE ADBE. PEDESTRIANS/BICYCLISTS SHALL BE DIRECTED WITH ADVANCED SIGNAGE. TO CROSS AT AN ACCEPTABLE LOCATION PRIOR TO ENTERING A SHOULDER OR LANE CLOSURE WORK ZONE, WHERE POSSIBLE, THESE SIGNS SHALL BE PLACED AT INTERSECTIONS PRIOR TO THE WORK ZONE RATHER THAN AT THE WORK ZONE TO MINIMIZE PEDESTRIAN/BIKE MIDBLOCK CROSSINGS. THE PEDESTRIAN/BIKE PATH THROUGH THE WORK ZONE SHALL BE MAINTAINED AS DEFINED IN SECTION 619-3.01C OF THE NYSDOT STANDARD SPECIFICATIONS AND STANDARD SHEETS 619-50 AND 619-51.

2. A STABLE, TRIP HAZARD FREE PATH SHALL BE MAINTAINED THROUGH OR AROUND THE WORK AREA FOR PEDESTRIANS/BICYCLISTS DURING ALL PHASES OF CONSTRUCTION.

3. REFER TO PEDESTRIAN ACCOMMODATION DETAILS ON DWGS. WZT-7 AND WZT-8.

UTILITY NOTES:

1. REFER TO THE UTILITY SPECIAL NOTE IN THE PROPOSAL BOOK.

2. REFER TO DWGS. UTT-1 THRU UTT-4 FOR UTILITY CONFLICT TABLES AND DWGS. UTP-1 THRU UTP-27 FOR UTILITY CONFLICT PLANS.

3. REFER TO DWGS. WLNT-1 THRU WLNT-2 FOR WATERLINE NOTES/TABLES AND DWG. WLP-1 FOR THE PROPOSED 8" WATERLINE RELOCATION PLAN/PROFILE.

ITEM 608.0101 - CONCRETE SIDEWALKS & DRIVEWAYS:

1. CONVENTIONALLY FORMED CONCRETE SHALL MEET THE REQUIREMENTS FOR CLASS D IN ACCORDANCE WITH SECTION 501 PORTLAND CEMENT CONCRETE - GENERAL WITH THE EXCEPTION THAT THE ALLOWABLE SLUMP RANGE WILL BE 3½"TO 4½" AND THE WATER TO CEMENTITIOUS RATIO SHALL NOT EXCEED 0.44. ALL CONCRETE SHALL CONTAIN A WATER-REDUCING ADMIXTURE MEETING THE REQUIREMENTS OF SECTION 711-08 ADMIXTURES IN SUCH A QUANTITY AS TO PROVIDE A MINIMUM 10% REDUCTION OF THE DESIGN WATER CONTENT BY USING A NORMAL RANGE WATER-REDUCER.

MAINTENANCE JURISDICTION NOTE:

1. AFTER ACCEPTANCE OF THIS CONTRACT, THE STATE WILL ASSUME RESPONSIBILITY FOR MAINTENANCE OF THE HIGHWAY. ALL PUBLIC INTERSECTING ROADS, HIGHWAYS, OR STREETS NOT ON THE STATE HIGHWAY SYSTEM SHALL BE MAINTAINED BY THE AGENCY OR LOCAL UNIT OF GOVERNMENT HAVING JURISDICTION BEYOND THE OUTSIDE EDGE OF SHOULDER, CURB LINE, OR BACK OF DITCH OF THE STATE HIGHWAY ACROSS THE INTERSECTION.

2. ALL EXISTING SANITARY SEWERS AND OTHER SEWERS NOT DEEMED TO BE A PART OF THE PROJECT BY THE COMMISSIONER, WATER MAINS, HYDRANTS, AND OTHER MUNICIPALLY OR PRIVATELY OWNED FACILITIES WITHIN THE LIMITS OF THE HIGHWAY ROW WHICH REMAIN IN SERVICE UNCHANGED, AND ALL SUCH FACILITIES RELOCATED OR PROTECTED AS PART OF THE WORK PERFORMED UNDER THIS CONTRACT, WHETHER CROSSING, LOCATED WITHIN, OR ADJACENT TO THE ROW, SHALL BE MAINTAINED, AS THE CASE MAY BE, BY THE MUNICIPALITY OR BY THE AGENCY OR UNIT HAVING CONTROL AND JURISDICTION THEREOF AT NO COST OR EXPENSE TO THE STATE.

COORDINATION WITH CONCURRENT CONSTRUCTION:

1. IT SHALL BE THE CONTRACTOR'S RESPONSIBILITY TO COORDINATE CONSTRUCTION ACTIVITIES WITH OTHER CONTRACTORS WHICH MAY BE IN FORCE AT THE SAME TIME.

   A. D264477 / PIN 5809.73 - BNRAMS PHASE 3 (ROUTES 75,78,130,277,33)
   CONTACT: RENJIT JAMES (PE)
   EMAIL: RENJIT.JAMES@DOT.NY.GOV
   PHONE: (716) 847-3229

   B. MIDTOWN APARTMENT COMMUNITY, 6386 TRANSIT ROAD
   CONTACT: CHRISTOPHER WOOD
   EMAIL: CWOOD@CWM-AE.COM
   PHONE: (716) 842-3165 x103

   NOTE: THIS PROJECT IS ANTICIPATED TO BEGIN IN THE SUMMER OF 2021. THE EXISTING DRIVEWAY AT THIS ADDRESS WILL NO LONGER BE NEEDED AND SHALL BE REMOVED UP TO THE HIGHWAY BOUNDARY. COORDINATE THE REMOVAL WITH THE CONTACT PROVIDED ABOVE.

COORDINATION WITH SCHOOL DISTRICTS & BUS SCHEDULES:

1. CONSTRUCTION ACTIVITIES MAY IMPACT SCHOOL BUS ROUTES, STUDENT BUS STOPS AND STUDENTS WALKING TO SCHOOL. COORDINATION WITH SCHOOL DISTRICTS SHALL BE CONDUCTED TO MINIMIZE IMPACT ON STUDENT ACCESS TO SIDEWALKS, CROSSWALKS, SCHOOL BUS ROUTES AND STUDENT PICK-UP.

AFFIX SEAL:
ON:

ALTERED BY:
ON:

D264571
STATE OF NEW YORK
ROBERT F. SCHALLER
NO. 082465
LICENSED PROFESSIONAL ENGINEER

AS-BUILT REVISIONS
DESCRIPTION OF ALTERATIONS:

NY 78, TRANSIT ROAD, S.H. 1334A-1
FRENCH ROAD TO WEHRLE DRIVE
TOWNS OF CHEEKTOWAGA & LANCASTER
VILLAGE OF DEPEW
COUNTY: ERIE REGION: 05

PIN 5813.61
NY 78

BRIDGES

CULVERTS

ALL DIMENSIONS IN ft UNLESS OTHERWISE NOTED

GENERAL NOTES - SHEET 1

CONTRACT NUMBER
D264571

DRAWING NO. GNN-1
SHEET NO. 15

IT IS A VIOLATION OF LAW FOR ANY PERSON, UNLESS THEY ARE ACTING UNDER THE DIRECTION OF A LICENSED PROFESSIONAL ENGINEER, ARCHITECT, LANDSCAPE ARCHITECT, OR LAND SURVEYOR, TO ALTER AN ITEM IN ANY WAY. IF AN ITEM BEARING THE STAMP OF A LICENSED PROFESSIONAL IS ALTERED, THE ALTERING ENGINEER, ARCHITECT, LANDSCAPE ARCHITECT, OR LAND SURVEYOR SHALL STAMP THE DOCUMENT AND INCLUDE THE NOTATION "ALTERED BY" FOLLOWED BY THEIR SIGNATURE, THE DATE OF SUCH ALTERATION, AND A SPECIFIC DESCRIPTION OF THE ALTERATION.

NEW YORK STATE OF OPPORTUNITY. Department of Transportation

DESIGN SUPERVISOR S. S. VAIDYA JOB MANAGER R. F. SCHALLER DESIGN C. L. CRITES CHECK R. F. SCHALLER DRAFTING C. L. CRITES CHECK R. F. SCHALLER PROJECT MANAGER S. S. VAIDYA

FILE NAME = 581361_CPH_HWY_GNN-1.dgn
DATE/TIME = 22-JUN-2021 12:32
USER = ccrites

TIME, HOLIDAY & EVENT RESTRICTIONS FOR ROAD WORK:

1. MAJOR HOLIDAY RESTRICTIONS - NO WORK/SHOULDER CLOSURE WILL BE ALLOWED FOR MAJOR HOLIDAYS AS NOTED IN THE PROPSAL SPECIAL NOTE TITLED "TEMPORARY LANE CLOSURE RESTRICTIONS FOR MAJOR HOLIDAYS."
2. REGIONAL HOLIDAY RESTRICTIONS - CANADIAN HOLIDAY RESTRICTIONS SHALL NOT APPLY AT THIS LOCATION.
3. TIME RESTRICTIONS ARE FOR SINGLE LANE CLOSURES AND SHOULDER CLOSURES. SITE SPECIFIC VARIANCES TO TIME RESTRICTIONS WILL BE CONSIDERED ON A CASE-BY-CASE BASIS AND ONLY WITH APPROVAL OF THE SURFACE TRANSPORTATION CONTROLLER (STC). ALL DOUBLE LANE CLOSURES WILL REQUIRE APPROVAL BY THE STC. THE EIC SHALL COORDINATE WITH THE STC AND RTE WITH ANY RELEVANT INFORMATION/JUSTIFICATION THAT WILL ASSIST IN MAKING A DETERMINATION FOR PRIOR APPROVAL.
4. TIME RESTRICTIONS ARE FOR ANY WORK DAY, SUNDAY THROUGH SATURDAY, INCLUSIVE. ANY WAIVER OF THESE RESTRICTIONS NEEDS TO BE APPROVED BY THE SURFACE TRANSPORTATION CONTROLLER (STC). THE EIC SHALL COORDINATE WITH THE STC AND RTE WITH ANY RELEVANT INFORMATION/JUSTIFICATION THAT WILL ASSIST IN MAKING A DETERMINATION FOR PRIOR APPROVAL.
5. ROADWORK IS DEFINED AS ANY LANE AND/OR SHOULDER WORK THAT REQUIRES CLOSURE.

TABLE A - TIME & HOLIDAY RESTRICTIONS:

ROUTE	DIRECTION	LIMITS	TIME RESTRICTIONS
NY ROUTE 78	NORTHBOUND	NY RTE 130 TO MAPLE/GREINER	6AM-9AM & 3PM-7PM
NY ROUTE 78	SOUTHBOUND	MAPLE/GREINER TO NY RTE 130	6AM-9AM & 3PM-7PM
GENESEE ST	EASTBOUND	DICK/CAYUGA TO TRANSIT RD	6AM-9AM & 3PM-7PM
GENESEE ST.	WESTBOUND	TRANSIT RD TO DICK/CAYUGA	6AM-9AM & 3PM-7PM

IF THE CONTRACTOR VIOLATES ANY OF THE TIME AND HOLIDAY RESTRICTIONS, LIQUIDATED DAMAGES SHALL BE ASSESSED ON THE CONTRACTOR UNTIL SUCH TIME THAT THE CLOSURE IS OPENED.

TRAFFIC ON MILLED SURFACE - TIME RESTRICTION:

1. THE CONTRACTOR SHALL NOT LEAVE THE MILLED OR GROOVED PAVEMENT FOR MORE THAN 14 CALENDAR DAYS BEFORE PAVING THE HMA TOP COURSE. LIQUIDATED DAMAGES SHALL BE ASSESSED ON THE CONTRACTOR, IN ACCORDANCE WITH SECTION 108-03 AND TABLE 108-01 OF THE NYSDOT STANDARD SPECIFICATIONS, UNTIL SUCH TIME AS THE TOP COURSE HAS BEEN PAVED.
2. IF A SEGMENT OF ROADWAY TAKES MORE THAN ONE DAY TO MILL, TIME SHALL BE MEASURED FROM THE FIRST DAY OF THE MILLING OPERATION.

NIGHTTIME OPERATIONS:

1. MILLING AND PAVING OF FINAL TOP COURSE (ITEM 490.10 & ITEM 402.096204 RESPECTIVELY) ALONG TRANSIT ROAD AND GENESEE STREET SHALL BE PREFORMED DURING THE NIGHTTIME HOURS OF 10PM TO 6AM SUNDAY-THURSDAY.

GUIDE RAIL DOWNTIME RESTRICTIONS:

1. THIS CONTRACT CONTAINS RESTRICTIONS ON THE AMOUNT OF TIME THAT ANY GUIDE RAIL MAY BE OUT OF SERVICE OR THAT INSTALLATION OF NEW RUNS MAY BE DEFERRED. THE CONTRACTOR IS ADVISED TO BE AWARE OF THESE RESTRICTIONS WHEN PREPARING BIDS AND SCHEDULING WORK FOR THIS CONTRACT. FAILURE, AS DETERMINED BY THE ENGINEER, TO COMPLY WITH TIME FRAMES SPECIFIED WILL RESULT IN ASSESSMENT OF NONPAYMENT FOR THE ITEM 619.01 BASIC WORK ZONE TRAFFIC CONTROL FOR EACH CALENDAR DAY DURING WHICH THE CITED GUIDE RAIL INSTALLATION IS NOT COMPLETE. IN ADDITION, LIQUIDATED DAMAGES WILL ALSO BE ASSESSED AT RATES SHOWN IN TABLE 108-01 OF SECTION 108-03 OF THE NYSDOT STANDARD SPECIFICATIONS.
2. GUIDE RAIL SHALL NOT BE REMOVED FROM ANY LOCATIONS WHERE TRAFFIC IS BEING MAINTAINED UNTIL THE CONTRACTOR OR SUB-CONTRACTOR IS PREPARED TO FULLY INSTALL THE NEW SECTION OF RAIL AND ITS TERMINALS. THE CONTRACTOR SHALL SCHEDULE OPERATIONS TO REPLACE ALL RAIL ON THE SAME DAY AS REMOVED UNLESS SUBSEQUENT OPERATIONS MAKE IT IMPRACTICAL TO DO SO. INSTALLATION OF THE NEW RAIL SHALL BEGIN AS SOON AS PRACTICAL AFTER REMOVAL OF THE EXISTING RAIL. INSTALLATION WORK ON ANY INDIVIDUAL LOCATION SHALL CONTINUE UNTIL ALL THE RAILING AT THAT LOCATION HAS BEEN INSTALLED. WHEN GUIDE RAIL CANNOT BE REPLACED ON THE SAME DAY AS REMOVED, THE WORK AREA SHALL BE DELINEATED USING THE LONGTERM STATIONARY LANE CLOSURE AS SHOWN IN THE PLANS. IF WORK IS NOT COMPLETED DURING THE LONGTERM STATIONARY LANE CLOSURE WORK ZONE SETUPS, THE WORK AREA SHALL BE DELINEATED USING AN OVERNIGHT SHOULDER CLOSURE SHOWN IN STANDARD SHEET 619-20 AND THE GUIDE RAIL SHALL BE REPLACED WITHIN THE GUIDE RAIL REPLACEMENT TIME DURATION FOR THIS CONTRACT, WHICH IS 14 CALENDAR DAYS.
3. THE GUIDE RAIL REPLACEMENT TIME DURATION FOR A GIVEN EXISTING RUN SHALL BE MEASURED FROM THE FIRST DAY THAT DISMANTLING OF THE RUN BEGINS TO THE DAY OF COMPLETE INSALLATION OF THE RAIL AND ITS END ASSEMBLIES.

SUGGESTED CONSTRUCTION SEQUENCING:

✱ 1. PHASE 1 - SOUTHBOUND RT LANE EXTENSION FROM THRUWAY TO B.I.N. 1030250
2. PHASE 2 - B.I.N. 1030250 DECK REHABILITATION
✱ 3. PHASE 3A & 3B - WIDENING FOR DUAL LT TURN LANES AT NW CORNER OF TRANSIT & GENESEE
4. PHASE 3C - WIDENING FOR DUAL LT TURN LANES AT SW CORNER OF TRANSIT & GENESEE
✱ 5. PHASE 3D - WIDENING FOR DUAL LT TURN LANES AT NE CORNER OF TRANSIT & GENESEE
6. PHASE 3E - WIDENING FOR DUAL LT TURN LANES AT SE CORNER OF TRANSIT & GENESEE
7. PHASE 4 - EB GENESEE STREET RT TURN LANE EXTENSION
8. PHASE 5A - INSTALL SIDEWALK ON THE EAST & WEST SIDES OF TRANSIT BETWEEN GENESEE AND FRENCH
9. PHASE 5B - INSTALL SIDEWALK ON THE EAST & WEST SIDES OF TRANSIT BETWEEN NYS THRUWAY AND GENESEE
10. PHASE 6A - WIDEN NORTH SIDE OF FRENCH ROAD WEST OF TRANSIT
11. PHASE 6B - WIDEN SOUTH SIDE OF FRENCH ROAD EAST OF TRANSIT
12. PHASE 7 - MILL & PAVE FROM WEHRLE DRIVE TO FRENCH ROAD AND INSTALL FINAL PAVEMENT MARKINGS
13. PHASE 8 - INSTALL SNOW FENCE ON THE WEST SIDE OF TRANSIT (NORTH & SOUTH OF AERO DRIVE)

✱ NOTE: CONSIDER CONSTRUCTING THESE PHASES AT THE SAME TIME.

AFFIX SEAL:
ON:

D264571
STATE OF NEW YORK · ROBERT F. SCHALLER · LICENSED PROFESSIONAL ENGINEER · NO. 082465

ALTERED BY:
ON:

AS-BUILT REVISIONS
DESCRIPTION OF ALTERATIONS:

NY 78, TRANSIT ROAD, S.H. 1334A-1
FRENCH ROAD TO WEHRLE DRIVE
TOWNS OF CHEEKTOWAGA & LANCASTER
VILLAGE OF DEPEW
COUNTY: ERIE REGION: 05

PIN 5813.61
NY 78

BRIDGES

CULVERTS

ALL DIMENSIONS IN ft UNLESS OTHERWISE NOTED

GENERAL NOTES - SHEET 2

CONTRACT NUMBER
D264571

DRAWING NO. GNN-2
SHEET NO. 16

IT IS A VIOLATION OF LAW FOR ANY PERSON, UNLESS THEY ARE ACTING UNDER THE DIRECTION OF A LICENSED PROFESSIONAL ENGINEER, ARCHITECT, LANDSCAPE ARCHITECT, OR LAND SURVEYOR, TO ALTER AN ITEM IN ANY WAY. IF AN ITEM BEARING THE STAMP OF A LICENSED PROFESSIONAL IS ALTERED, THE ALTERING ENGINEER, ARCHITECT, LANDSCAPE ARCHITECT, OR LAND SURVEYOR SHALL STAMP THE DOCUMENT AND INCLUDE THE NOTATION "ALTERED BY" FOLLOWED BY THEIR SIGNATURE, THE DATE OF SUCH ALTERATION, AND A SPECIFIC DESCRIPTION OF THE ALTERATION.

NEW YORK STATE OF OPPORTUNITY. Department of Transportation

DESIGN SUPERVISOR S. S. VAIDYA JOB MANAGER R. F. SCHALLER DESIGN C. L. CRITES CHECK R. F. SCHALLER DRAFTING C. L. CRITES CHECK R. F. SCHALLER PROJECT MANAGER S. S. VAIDYA
FILE NAME = 581361_CPH_HWY_GNN-2.dgn
DATE/TIME = 22-JUN-2021 12:32
USER = ccrites

SUGGESTED CONSTRUCTION SEQUENCING FOR WIDENINGS

PHASE	LOCATION	DESIGNATED CONSTRUCTION ACTIVIES	WORK ZONE TRAFFIC CONTROL MEASURES
PHASE 1		***SOUTHBOUND LANE EXTENSION FROM THRUWAY TO BIN 1030250*** WIDEN WEST SIDE OF TRANSIT ROAD (NYS 78) - WIDTH VARIESPEDESTRIAN UPGRADES INSTALL SIDEWALK ON THE WEST SIDE OF TRANSIT BETWEEN GENESEE AND NYS THRUWAY UPDATE ADA FACILITIES, & REPLACE/MODIFY TRAFFIC SIGNALS	REFER TO **DWGS. WZ1-1 THRU WZ1-7** FOR WORK ZONE TRAFFIC CONTROL
PHASE 2		***BIN 1030250 - DECK REHABILITATION*** WIDEN EAST SIDE FOR NEW PEDESTRIAN STRUCTURE & OTHER INCEDENTIAL BRIDGE WORK	REFER TO **DWGS. WZ2-1 THRU WZ2-3** FOR WORK ZONE TRAFFIC CONTROL
PHASE 3A		***DUAL LEFT TURN LANES*** ***TRANSIT ROAD (NYS 78) & GENESEE (NYS 33)*** WIDEN WEST SIDE OF TRANSIT BETWEEN GENESEE & BIN 1030250 OVER ELLICOTT CREEK	REFER TO **DWGS. WZ3A-1 THRU WZ3A-4** FOR WORK ZONE TRAFFIC CONTROL
PHASE 3B		***DUAL LEFT TURN LANES*** ***TRANSIT ROAD (NYS 78) & GENESEE (NYS 33)*** WIDEN NORTH SIDE OF GENESEE WEST OF TRANSIT	
PHASE 3C		***DUAL LEFT TURN LANES*** ***TRANSIT ROAD (NYS 78) & GENESEE (NYS 33)*** WIDEN WEST SIDE OF TRANSIT SOUTH OF GENESEE APPROXIMATELY 8'	REFER TO **DWGS. WZ3C-1 THRU WZ3C-3** FOR WORK ZONE TRAFFIC CONTROL
PHASE 3D		***DUAL LEFT TURN LANES*** ***TRANSIT ROAD (NYS 78) & GENESEE (NYS 33)*** WIDEN NORTH SIDE OF GENESEE EAST OF TRANSIT WIDTH VARIES 6' TO 10.6'	REFER TO **DWGS. WZ3D-1 THRU WZ3D-2** FOR WORK ZONE TRAFFIC CONTROL
PHASE 3E		***DUAL LEFT TURN LANES*** ***TRANSIT ROAD (NYS 78) & GENESEE (NYS 33)*** WIDEN THE EAST SIDE OF TRANSIT SOUTH OF GENESEE WIDTH VARIES 1.3'	REFER TO **DWGS. WZ3E-1 THRU WZ3E-2** FOR WORK ZONE TRAFFIC CONTROL

SUGGESTED CONSTRUCTION SEQUENCING FOR WIDENINGS

PHASE	LOCATION	DESIGNATED CONSTRUCTION ACTIVIES	WORK ZONE TRAFFIC CONTROL MEASURES
PHASE 4		***RIGHT TURN LANE EXTENSION ON GENESEE (NYS 33)*** WIDEN SOUTH SIDE OF GENESEE WEST OF TRANSIT	REFER TO **DWGS. WZ4-1 THRU WZ4-2** FOR WORK ZONE TRAFFIC CONTROL
PHASE 5A	*SEE GNP SHEETS*	***PEDESTRIAN UPGRADES*** INSTALL SIDEWALKS ON EAST AND WEST SIDES OF TRANSIT BETWEEN FRENCH AND GENESEE, UPDATE ADA FACILITIES, & REPLACE/MODIFY TRAFFIC SIGNALS	REFER TO **DWGS. WZT-1 THRU WZT-8** FOR TYPICAL WORK ZONE TRAFFIC CONTROL MEASURES FOR SIDEWALK / RAMP CLOSURES AND LANE CLOSURES
PHASE 5B	*SEE GNP SHEETS*	***PEDESTRIAN UPGRADES*** INSTALL SIDEWALK ON THE EAST SIDE OF TRANSIT BETWEEN GENESEE AND NYS THRUWAY UPDATE ADA FACILITIES, & REPLACE/MODIFY TRAFFIC SIGNALS	REFER TO **DWGS. WZT-1 THRU WZT-8** FOR TYPICAL WORK ZONE TRAFFIC CONTROL MEASURES FOR SIDEWALK / RAMP CLOSURES AND LANE CLOSURES
PHASE 6A		***WIDENING OF FRENCH ROAD*** WIDEN NORTH SIDE OF FRENCH RD. WEST OF TRANSIT	REFER TO **DWG. WZ6A-1** FOR WORK ZONE TRAFFIC CONTROL
PHASE 6B		***WIDENING OF FRENCH ROAD*** WIDEN SOUTH SIDE OF FRENCH RD. EAST OF TRANSIT	REFER TO **DWG. WZ6B-1** FOR WORK ZONE TRAFFIC CONTROL
PHASE 7	*SEE GNP SHEETS*	***PAVEMENT REHABILITATION*** MILL AND PAVE FROM FRENCH TO WEHRLE	REFER TO **DWGS. WZT-1 THRU WZT-8** FOR TYPICAL WORK ZONE TRAFFIC CONTROL MEASURES FOR MILLING / PAVING AND LANE CLOSURES
PHASE 8		***WINTER SAFETY UPGRADE*** INSTALL SNOW FENCE ON WEST SIDE OF TRANSIT NEAR AERO DRIVE	**NOT NEEDED:** ALL WORK IS OFF ROADWAY

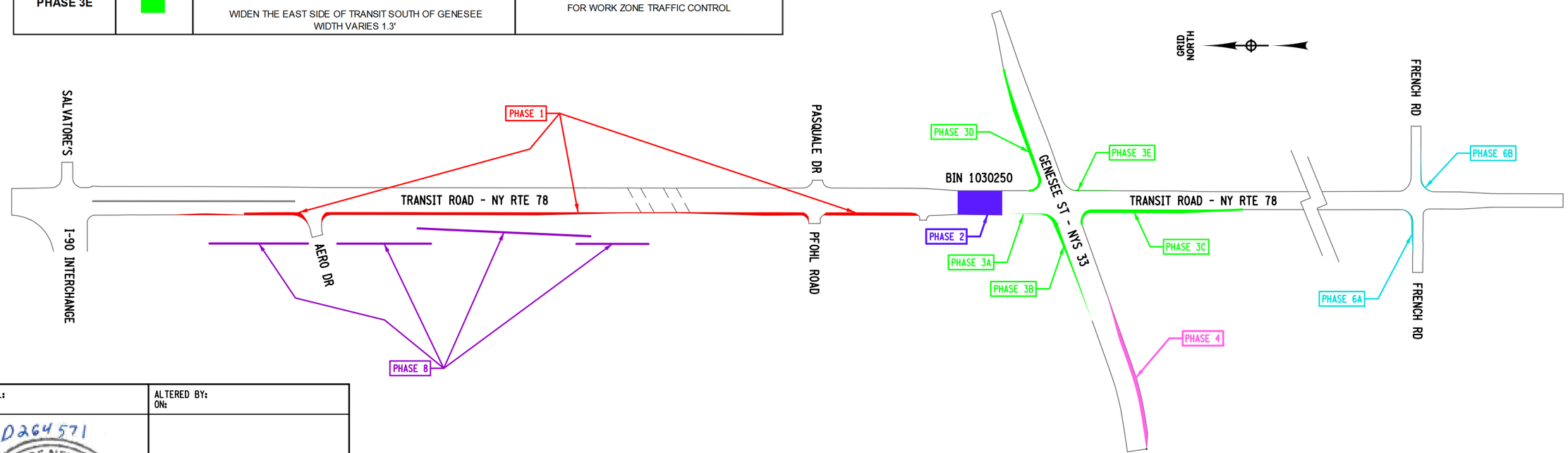

AFFIX SEAL:
ON:

ALTERED BY:
ON:

D264571
STATE OF NEW YORK
ROBERT F. SCHALLER
NO. 082465
LICENSED PROFESSIONAL ENGINEER

AS-BUILT REVISIONS
DESCRIPTION OF ALTERATIONS:

NY 78, TRANSIT ROAD, S.H. 1334A-1
FRENCH ROAD TO WEHRLE DRIVE
TOWNS OF CHEEKTOWAGA, LANCASTER, AMHERST
& CLARENCE, VILLAGE OF DEPEW
COUNTY: ERIE REGION: 05

PIN 5813.61
NY 78

BRIDGES

CULVERTS

ALL DIMENSIONS IN ft UNLESS OTHERWISE NOTED

WORK ZONE NOTES - SHEET 1

CONTRACT NUMBER
D264571

DRAWING NO. WZN-1
SHEET NO. 17

IT IS A VIOLATION OF LAW FOR ANY PERSON, UNLESS THEY ARE ACTING UNDER THE DIRECTION OF A LICENSED PROFESSIONAL ENGINEER, ARCHITECT, LANDSCAPE ARCHITECT, OR LAND SURVEYOR, TO ALTER AN ITEM IN ANY WAY. IF AN ITEM BEARING THE STAMP OF A LICENSED PROFESSIONAL IS ALTERED, THE ALTERING ENGINEER, ARCHITECT, LANDSCAPE ARCHITECT, OR LAND SURVEYOR SHALL STAMP THE DOCUMENT AND INCLUDE THE NOTATION "ALTERED BY" FOLLOWED BY THEIR SIGNATURE, THE DATE OF SUCH ALTERATION, AND A SPECIFIC DESCRIPTION OF THE ALTERATION.

NEW YORK STATE OF OPPORTUNITY. Department of Transportation

DESIGN SUPERVISOR S. S. VAIDYA
JOB MANAGER R. F. SCHALLER
DESIGN C. L. CRITES
CHECK R. F. SCHALLER
DRAFTING C. L. CRITES
CHECK R. F. SCHALLER
PROJECT MANAGER S. S. VAIDYA

FILE NAME = 581361_CPH_HWY_WZN-1.dgn
DATE/TIME = 22-JUN-2021 12:32
USER = cartes

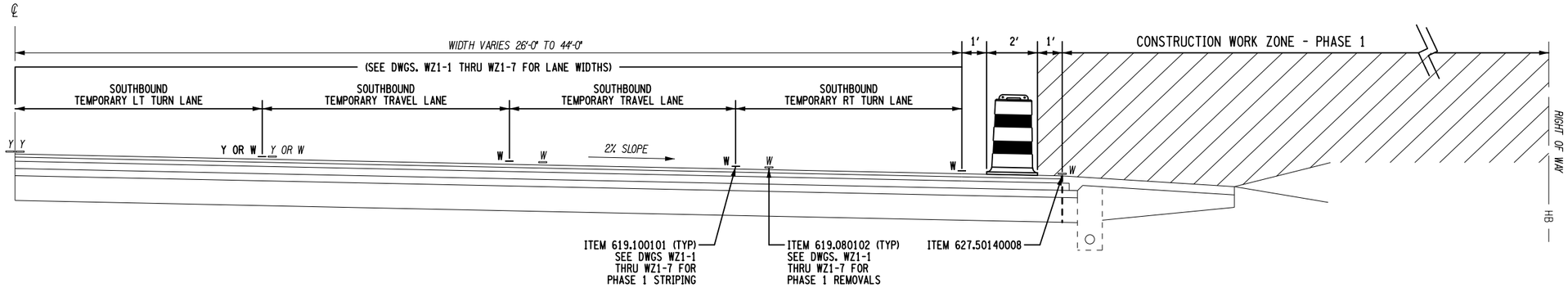

PHASE 1 - SECTION 1
TRANSIT RD - STA. 94+65 TO STA. 96+20 (RT)
TRANSIT RD - STA. 95+40 TO STA. 96+20 (LT)
EXISTING NORMAL CROWN

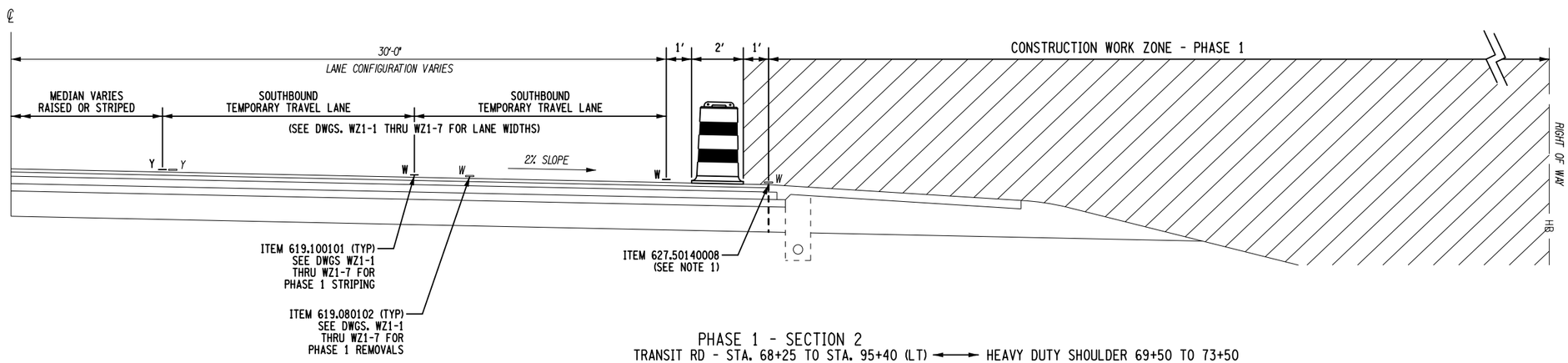

PHASE 1 - SECTION 2
TRANSIT RD - STA. 68+25 TO STA. 95+40 (LT) ⟷ HEAVY DUTY SHOULDER 69+50 TO 73+50
TRANSIT RD - STA. 67+75 TO STA. 94+65 (RT) ⟷ HEAVY DUTY SHOULDER TO 78+00
EXISTING NORMAL CROWN

LEGEND:
Y = YELLOW PAVEMENT MARKING
W = WHITE PAVEMENT MARKING

ITEM	DESCRIPTION	UNIT
619.080102	REMOVE PAVEMENT MARKING STRIPES, EPOXY PAINT	LF
619.100101	INTERIM PAVEMENT MARKINGS, STRIPES (TRAFFIC PAINT)	LF
627.50140008	CUTTING PAVEMENT	LF

NOTES:

1. THE SAWCUT LOCATION VARIES DUE TO SOME SECTIONS HAVING AN EXISTING HEAVY DUTY SHOULDER (SEE STATIONING ABOVE). LOCATIONS WHERE A NORMAL SHOULDER SECTION EXISTS, THE SAWCUT SHALL BE LOCATED AT THE EXISTING EDGE OF TRAVELED WAY.

AFFIX SEAL:
ON:

ALTERED BY:
ON:

D264571
STATE OF NEW YORK
ROBERT F. SCHALLER
NO. 082465
LICENSED PROFESSIONAL ENGINEER

AS-BUILT REVISIONS
DESCRIPTION OF ALTERATIONS:

NY 78, TRANSIT ROAD, S.H. 1334A-1
FRENCH ROAD TO WEHRLE DRIVE
TOWNS OF CHEEKTOWAGA & LANCASTER
VILLAGE OF DEPEW
COUNTY: ERIE REGION: 05

PIN 5813.61
NY 78

BRIDGES

CULVERTS

ALL DIMENSIONS IN ft UNLESS OTHERWISE NOTED

WORK ZONE TYPICAL SECTIONS
PHASE 1

CONTRACT NUMBER
D264571

DRAWING NO. WZTS-1
SHEET NO. 18

IT IS A VIOLATION OF LAW FOR ANY PERSON, UNLESS THEY ARE ACTING UNDER THE DIRECTION OF A LICENSED PROFESSIONAL ENGINEER, ARCHITECT, LANDSCAPE ARCHITECT, OR LAND SURVEYOR, TO ALTER AN ITEM IN ANY WAY. IF AN ITEM BEARING THE STAMP OF A LICENSED PROFESSIONAL IS ALTERED, THE ALTERING ENGINEER, ARCHITECT, LANDSCAPE ARCHITECT, OR LAND SURVEYOR SHALL STAMP THE DOCUMENT AND INCLUDE THE NOTATION "ALTERED BY" FOLLOWED BY THEIR SIGNATURE, THE DATE OF SUCH ALTERATION, AND A SPECIFIC DESCRIPTION OF THE ALTERATION.

NEW YORK STATE OF OPPORTUNITY. Department of Transportation

PROJECT MANAGER S. S. VAIDYA
CHECK R. F. SCHALLER
DRAFTING C. L. CRITES
CHECK R. F. SCHALLER
DESIGN C. L. CRITES
JOB MANAGER R. F. SCHALLER
DESIGN SUPERVISOR S. S. VAIDYA
FILE NAME = 581361_CPH_HWY_WZTS-1.dgn
DATE/TIME = 22-JUN-2021 12:32
USER = ccrites

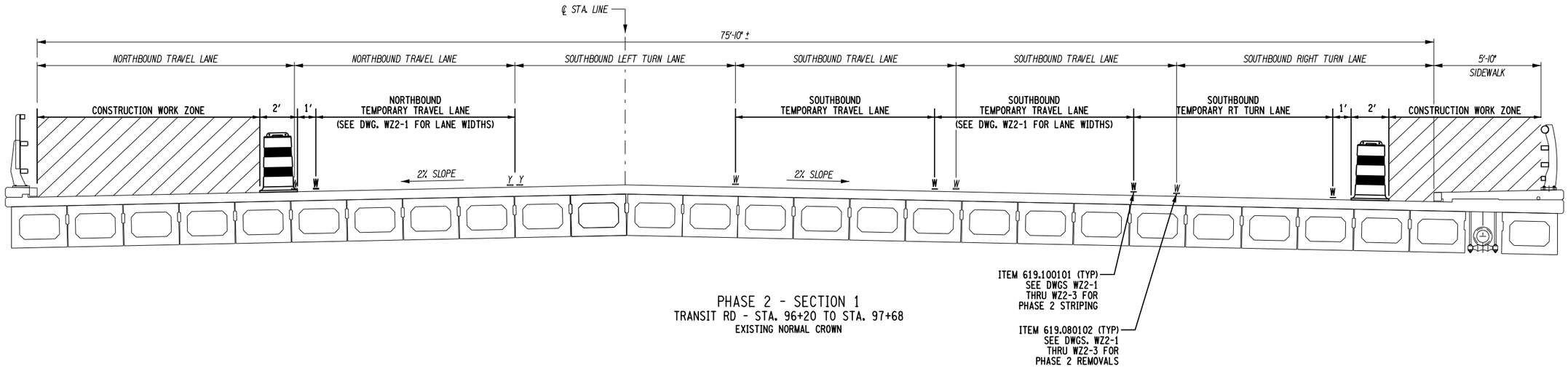

PHASE 2 - SECTION 1
TRANSIT RD - STA. 96+20 TO STA. 97+68
EXISTING NORMAL CROWN

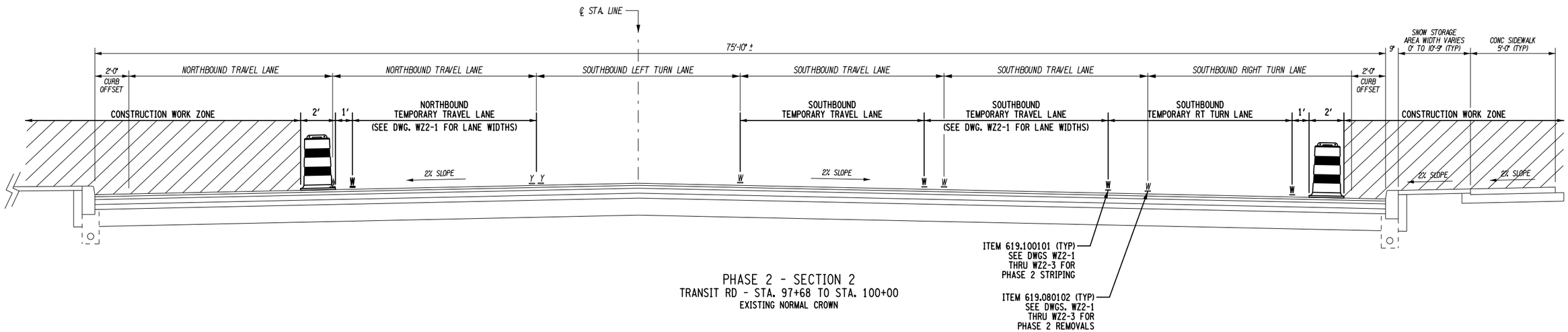

PHASE 2 - SECTION 2
TRANSIT RD - STA. 97+68 TO STA. 100+00
EXISTING NORMAL CROWN

LEGEND:
Y = YELLOW PAVEMENT MARKING
W = WHITE PAVEMENT MARKING

ITEM	DESCRIPTION	UNIT	NOTES
619.080102	REMOVE PAVEMENT MARKING STRIPES, EPOXY PAINT	LF	NONE
619.100101	INTERIM PAVEMENT MARKINGS, STRIPES (TRAFFIC PAINT)	LF	

AFFIX SEAL:
ON:

ALTERED BY:
ON:

D264571
STATE OF NEW YORK
ROBERT F. SCHALLER
NO. 082465
LICENSED PROFESSIONAL ENGINEER

AS-BUILT REVISIONS
DESCRIPTION OF ALTERATIONS:

NY 78, TRANSIT ROAD, S.H. 1334A-1
FRENCH ROAD TO WEHRLE DRIVE
TOWNS OF CHEEKTOWAGA & LANCASTER
VILLAGE OF DEPEW
COUNTY: ERIE REGION: 05

PIN 5813.61
NY 78

BRIDGES

CULVERTS

ALL DIMENSIONS IN ft UNLESS OTHERWISE NOTED

WORK ZONE TYPICAL SECTIONS
PHASE 2

CONTRACT NUMBER
D264571

DRAWING NO. WZTS-2
SHEET NO. 19

IT IS A VIOLATION OF LAW FOR ANY PERSON, UNLESS THEY ARE ACTING UNDER THE DIRECTION OF A LICENSED PROFESSIONAL ENGINEER, ARCHITECT, LANDSCAPE ARCHITECT, OR LAND SURVEYOR, TO ALTER AN ITEM IN ANY WAY. IF AN ITEM BEARING THE STAMP OF A LICENSED PROFESSIONAL IS ALTERED, THE ALTERING ENGINEER, ARCHITECT, LANDSCAPE ARCHITECT, OR LAND SURVEYOR SHALL STAMP THE DOCUMENT AND INCLUDE THE NOTATION "ALTERED BY" FOLLOWED BY THEIR SIGNATURE, THE DATE OF SUCH ALTERATION, AND A SPECIFIC DESCRIPTION OF THE ALTERATION.

NEW YORK STATE OF OPPORTUNITY. Department of Transportation

PROJECT MANAGER S. S. VAIDYA
CHECK R. F. SCHALLER
DRAFTING C. L. CRITES
CHECK R. F. SCHALLER
DESIGN C. L. CRITES
JOB MANAGER R. F. SCHALLER
DESIGN SUPERVISOR S. S. VAIDYA
FILE NAME = 581361_CPH_HWY_WZTS-2.dgn
DATE/TIME = 22-JUN-2021 12:32
USER = cc rites

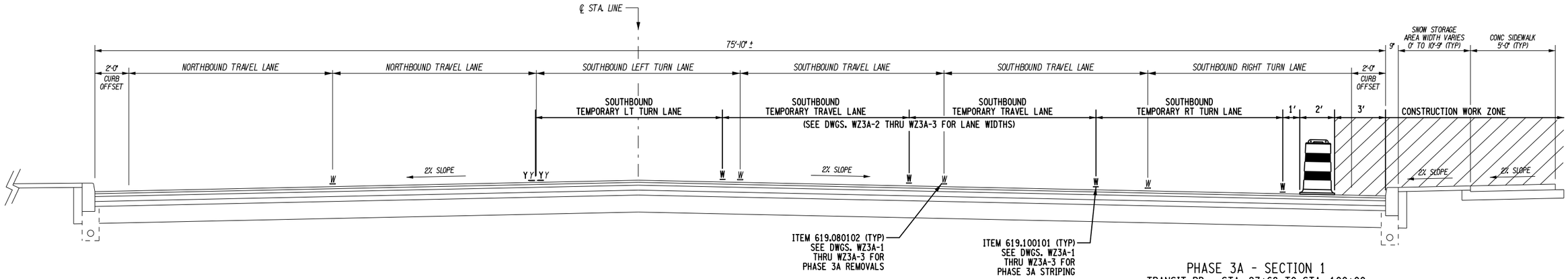

PHASE 3A - SECTION 1
TRANSIT RD - STA. 97+68 TO STA. 100+00
EXISTING NORMAL CROWN

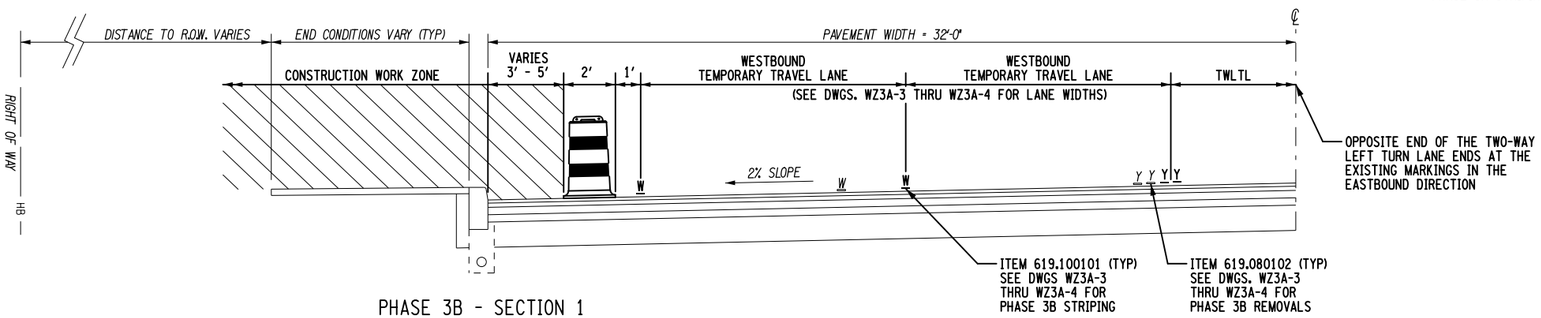

PHASE 3B - SECTION 1
GENESEE ST - STA. 280+25 TO STA. 286+20 (LT)
EXISTING NORMAL CROWN

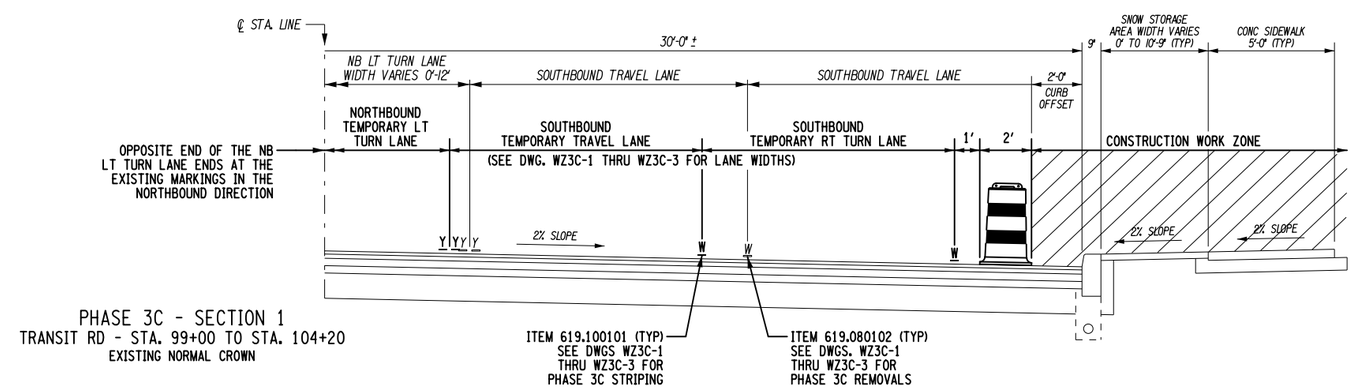

PHASE 3C - SECTION 1
TRANSIT RD - STA. 99+00 TO STA. 104+20
EXISTING NORMAL CROWN

LEGEND:
Y = YELLOW PAVEMENT MARKING
W = WHITE PAVEMENT MARKING

ITEM	DESCRIPTION	UNIT	NOTES
619.080102	REMOVE PAVEMENT MARKING STRIPES, EPOXY PAINT	LF	NONE
619.100101	INTERIM PAVEMENT MARKINGS, STRIPES (TRAFFIC PAINT)	LF	

AFFIX SEAL:
ON:

ALTERED BY:
ON:

D264571
STATE OF NEW YORK
ROBERT F. SCHALLER
NO. 082465
LICENSED PROFESSIONAL ENGINEER

AS-BUILT REVISIONS
DESCRIPTION OF ALTERATIONS:

NY 78, TRANSIT ROAD, S.H. 1334A-1
FRENCH ROAD TO WEHRLE DRIVE
TOWNS OF CHEEKTOWAGA & LANCASTER
VILLAGE OF DEPEW
COUNTY: ERIE REGION: 05

PIN 5813.61
NY 78

BRIDGES

CULVERTS

ALL DIMENSIONS IN ft UNLESS OTHERWISE NOTED

WORK ZONE TYPICAL SECTIONS
PHASE 3A, 3B & 3C

CONTRACT NUMBER
D264571

DRAWING NO. WZTS-3
SHEET NO. 20

IT IS A VIOLATION OF LAW FOR ANY PERSON, UNLESS THEY ARE ACTING UNDER THE DIRECTION OF A LICENSED PROFESSIONAL ENGINEER, ARCHITECT, LANDSCAPE ARCHITECT, OR LAND SURVEYOR, TO ALTER AN ITEM IN ANY WAY. IF AN ITEM BEARING THE STAMP OF A LICENSED PROFESSIONAL IS ALTERED, THE ALTERING ENGINEER, ARCHITECT, LANDSCAPE ARCHITECT, OR LAND SURVEYOR SHALL STAMP THE DOCUMENT AND INCLUDE THE NOTATION "ALTERED BY" FOLLOWED BY THEIR SIGNATURE, THE DATE OF SUCH ALTERATION, AND A SPECIFIC DESCRIPTION OF THE ALTERATION.

NEW YORK STATE OF OPPORTUNITY. Department of Transportation

PROJECT MANAGER S. S. VAIDYA
CHECK R. F. SCHALLER
DRAFTING C. L. CRITES
DESIGN C. L. CRITES
JOB MANAGER R. F. SCHALLER
DESIGN SUPERVISOR S. S. VAIDYA
FILE NAME = 581361_CPH_HWY_WZTS-3.dgn
DATE/TIME = 22-JUN-2021 12:32
USER = cartes

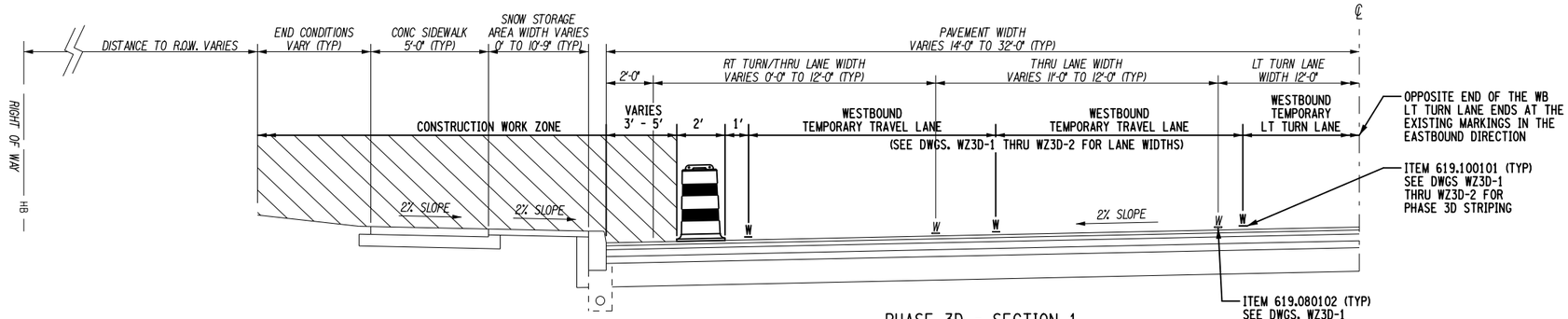

PHASE 3D - SECTION 1
GENESEE ST - STA. 286+20 TO STA. 291+78 (LT)
EXISTING NORMAL CROWN

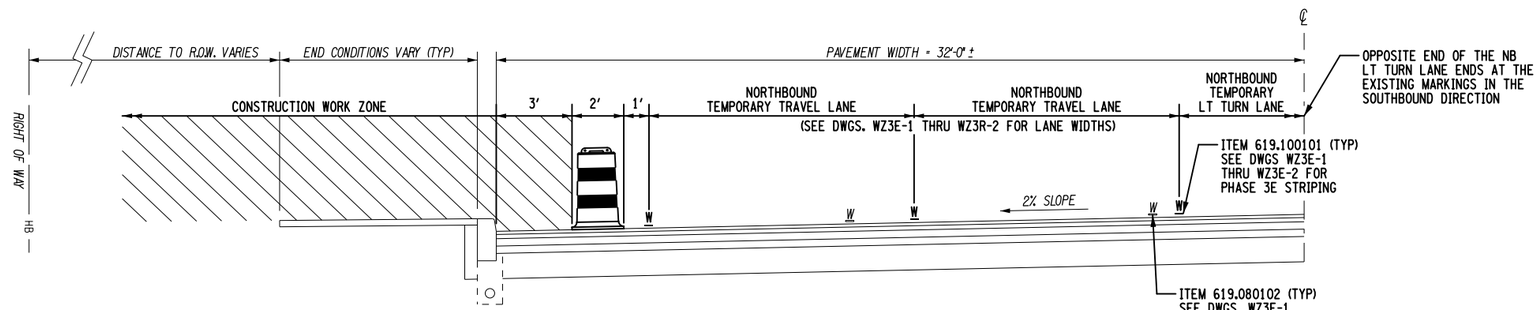

PHASE 3E - SECTION 1
TRANSIT RD - STA. 97+68 TO STA. 104+20 (LT)
EXISTING NORMAL CROWN

LEGEND:
Y = YELLOW PAVEMENT MARKING
W = WHITE PAVEMENT MARKING

ITEM	DESCRIPTION	UNIT	NOTES
619.080102	REMOVE PAVEMENT MARKING STRIPES, EPOXY PAINT	LF	NONE
619.100101	INTERIM PAVEMENT MARKINGS, STRIPES (TRAFFIC PAINT)	LF	

AFFIX SEAL:
ON:

ALTERED BY:
ON:

D264571
STATE OF NEW YORK
ROBERT F. SCHALLER
NO. 082465
LICENSED PROFESSIONAL ENGINEER

AS-BUILT REVISIONS
DESCRIPTION OF ALTERATIONS:

NY 78, TRANSIT ROAD, S.H. 1334A-1
FRENCH ROAD TO WEHRLE DRIVE
TOWNS OF CHEEKTOWAGA & LANCASTER
VILLAGE OF DEPEW
COUNTY: ERIE REGION: 05

PIN 5813.61
NY 78

BRIDGES

CULVERTS

ALL DIMENSIONS IN ft UNLESS OTHERWISE NOTED

WORK ZONE TYPICAL SECTIONS
PHASE 3D & 3E

CONTRACT NUMBER
D264571

DRAWING NO. WZTS-4
SHEET NO. 21

IT IS A VIOLATION OF LAW FOR ANY PERSON, UNLESS THEY ARE ACTING UNDER THE DIRECTION OF A LICENSED PROFESSIONAL ENGINEER, ARCHITECT, LANDSCAPE ARCHITECT, OR LAND SURVEYOR, TO ALTER AN ITEM IN ANY WAY. IF AN ITEM BEARING THE STAMP OF A LICENSED PROFESSIONAL IS ALTERED, THE ALTERING ENGINEER, ARCHITECT, LANDSCAPE ARCHITECT, OR LAND SURVEYOR SHALL STAMP THE DOCUMENT AND INCLUDE THE NOTATION "ALTERED BY" FOLLOWED BY THEIR SIGNATURE, THE DATE OF SUCH ALTERATION, AND A SPECIFIC DESCRIPTION OF THE ALTERATION.

NEW YORK STATE OF OPPORTUNITY. Department of Transportation

DESIGN SUPERVISOR S. S. VAIDYA JOB MANAGER R. F. SCHALLER DESIGN C. L. CRITES CHECK R. F. SCHALLER DRAFTING C. L. CRITES CHECK R. F. SCHALLER PROJECT MANAGER S. S. VAIDYA
FILE NAME = 581361_CPH_HWY_WZTS-4.dgn
DATE/TIME = 22-JUN-2021 12:32
USER = cortes

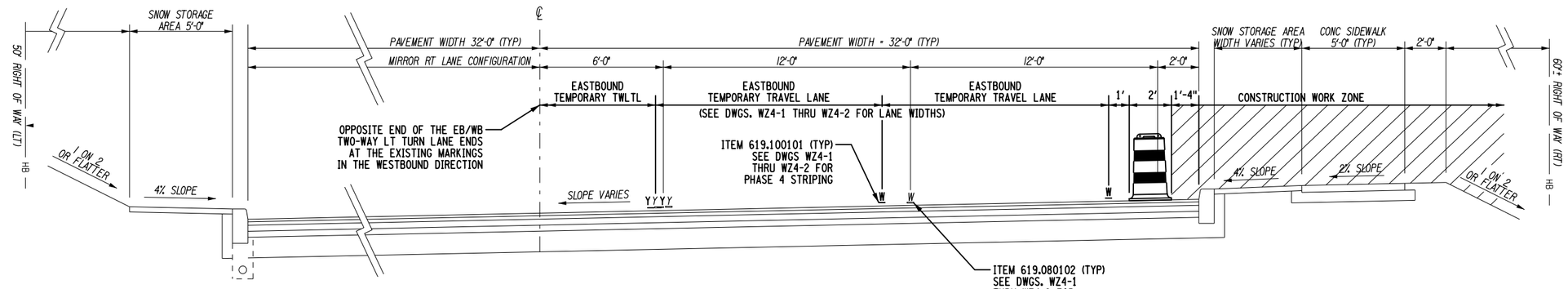

PHASE 4 - SECTION 1
GENESEE ST - STA. 276+52 TO STA. 280+00
EXISTING SUPERELEVATION

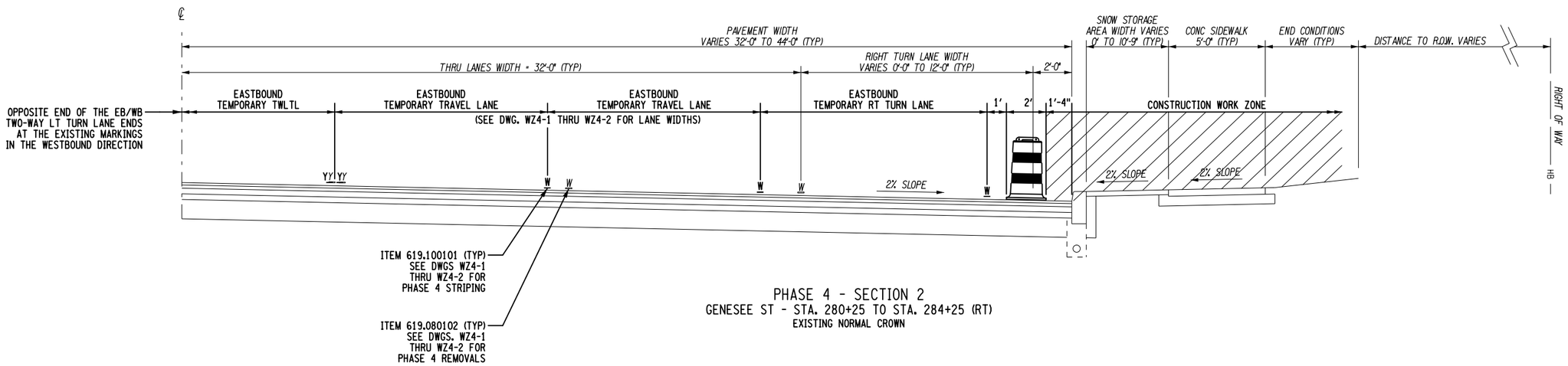

PHASE 4 - SECTION 2
GENESEE ST - STA. 280+25 TO STA. 284+25 (RT)
EXISTING NORMAL CROWN

LEGEND:
Y = YELLOW PAVEMENT MARKING
W = WHITE PAVEMENT MARKING

ITEM	DESCRIPTION	UNIT	NOTES
619.080102	REMOVE PAVEMENT MARKING STRIPES, EPOXY PAINT	LF	NONE
619.100101	INTERIM PAVEMENT MARKINGS, STRIPES (TRAFFIC PAINT)	LF	

AFFIX SEAL:
ON:

ALTERED BY:
ON:

D264571
STATE OF NEW YORK
ROBERT F. SCHALLER
NO. 082465
LICENSED PROFESSIONAL ENGINEER

AS-BUILT REVISIONS
DESCRIPTION OF ALTERATIONS:

NY 78, TRANSIT ROAD, S.H. 1334A-1
FRENCH ROAD TO WEHRLE DRIVE
TOWNS OF CHEEKTOWAGA & LANCASTER
VILLAGE OF DEPEW
COUNTY: ERIE REGION: 05

PIN 5813.61
NY 78

BRIDGES

CULVERTS

ALL DIMENSIONS IN ft UNLESS OTHERWISE NOTED

WORK ZONE TYPICAL SECTIONS
PHASE 4

CONTRACT NUMBER
D264571

DRAWING NO. WZTS-5
SHEET NO. 22

IT IS A VIOLATION OF LAW FOR ANY PERSON, UNLESS THEY ARE ACTING UNDER THE DIRECTION OF A LICENSED PROFESSIONAL ENGINEER, ARCHITECT, LANDSCAPE ARCHITECT, OR LAND SURVEYOR, TO ALTER AN ITEM IN ANY WAY. IF AN ITEM BEARING THE STAMP OF A LICENSED PROFESSIONAL IS ALTERED, THE ALTERING ENGINEER, ARCHITECT, LANDSCAPE ARCHITECT, OR LAND SURVEYOR SHALL STAMP THE DOCUMENT AND INCLUDE THE NOTATION "ALTERED BY" FOLLOWED BY THEIR SIGNATURE, THE DATE OF SUCH ALTERATION, AND A SPECIFIC DESCRIPTION OF THE ALTERATION.

NEW YORK STATE OF OPPORTUNITY. Department of Transportation

PROJECT MANAGER S. S. VAIDYA
CHECK R. F. SCHALLER
DRAFTING C. L. CRITES
CHECK R. F. SCHALLER
DESIGN C. L. CRITES
JOB MANAGER R. F. SCHALLER
DESIGN SUPERVISOR S. S. VAIDYA
FILE NAME = 581361_CPH_HWY_WZTS-5.dgn
DATE/TIME = 22-JUN-2021 12:32
USER = cc rites

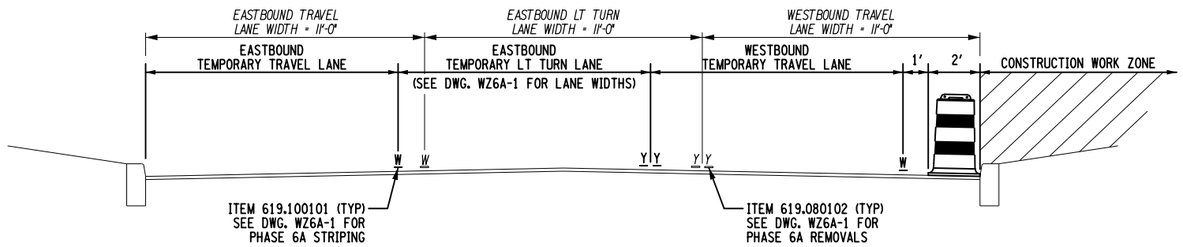

PHASE 6A - SECTION 1
FRENCH RD - STA. FW 0+24 TO FW 1+83
EXISTING NORMAL CROWN

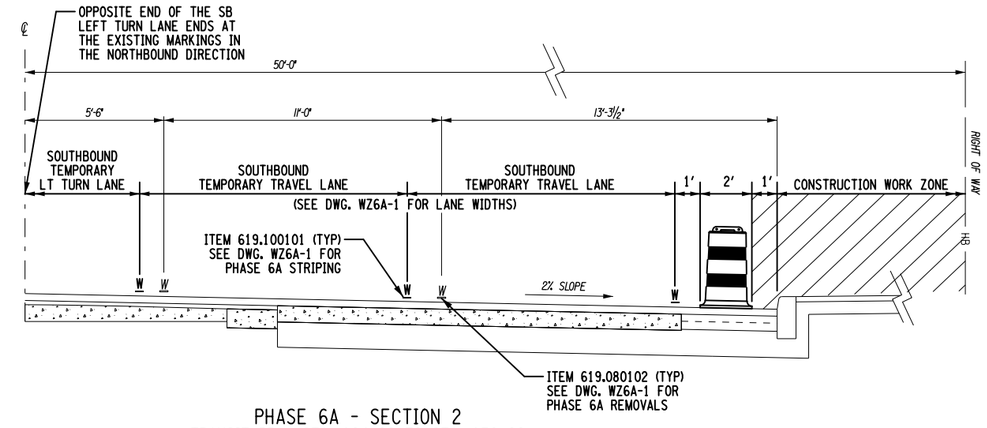

PHASE 6A - SECTION 2
TRANSIT RD - STA. 104+00 TO STA. 170+00
EXISTING NORMAL CROWN

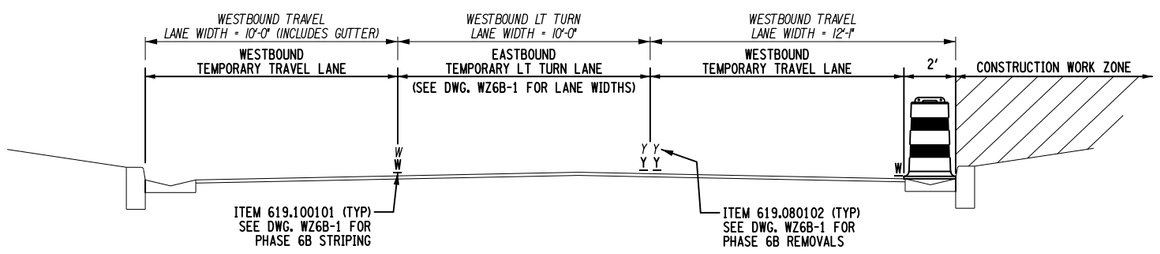

PHASE 6B - SECTION 1
FRENCH RD - STA. FE 0+35 TO FE 1+83
EXISTING NORMAL CROWN

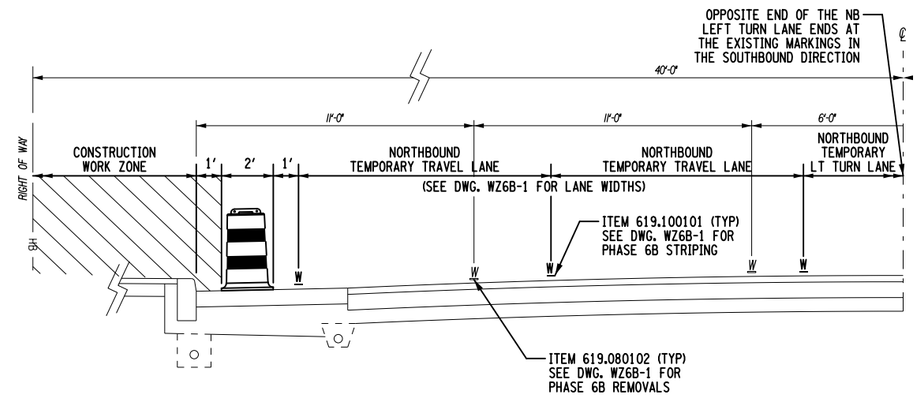

PHASE 6B - SECTION 2
TRANSIT RD - STA. 170+00 TO STA. 172+50
EXISTING PARABOLIC CROWN

LEGEND:
Y = YELLOW PAVEMENT MARKING
W = WHITE PAVEMENT MARKING

ITEM	DESCRIPTION	UNIT	NOTES
619.080102	REMOVE PAVEMENT MARKING STRIPES, EPOXY PAINT	LF	NONE
619.100101	INTERIM PAVEMENT MARKINGS, STRIPES (TRAFFIC PAINT)	LF	

AFFIX SEAL:
ON:

ALTERED BY:
ON:

D264571
STATE OF NEW YORK
ROBERT F. SCHALLER
NO. 082465
LICENSED PROFESSIONAL ENGINEER

AS-BUILT REVISIONS
DESCRIPTION OF ALTERATIONS:

NY 78, TRANSIT ROAD, S.H. 1334A-1
FRENCH ROAD TO WEHRLE DRIVE
TOWNS OF CHEEKTOWAGA & LANCASTER
VILLAGE OF DEPEW
COUNTY: ERIE REGION: 05

PIN 5813.61
NY 78

BRIDGES

CULVERTS

ALL DIMENSIONS IN ft UNLESS OTHERWISE NOTED

WORK ZONE TYPICAL SECTIONS
PHASE 6A & 6B

CONTRACT NUMBER
D264571

DRAWING NO. WZTS-6
SHEET NO. 23

IT IS A VIOLATION OF LAW FOR ANY PERSON, UNLESS THEY ARE ACTING UNDER THE DIRECTION OF A LICENSED PROFESSIONAL ENGINEER, ARCHITECT, LANDSCAPE ARCHITECT, OR LAND SURVEYOR, TO ALTER AN ITEM IN ANY WAY. IF AN ITEM BEARING THE STAMP OF A LICENSED PROFESSIONAL IS ALTERED, THE ALTERING ENGINEER, ARCHITECT, LANDSCAPE ARCHITECT, OR LAND SURVEYOR SHALL STAMP THE DOCUMENT AND INCLUDE THE NOTATION "ALTERED BY" FOLLOWED BY THEIR SIGNATURE, THE DATE OF SUCH ALTERATION, AND A SPECIFIC DESCRIPTION OF THE ALTERATION.

NEW YORK STATE OF OPPORTUNITY. Department of Transportation

PROJECT MANAGER S. S. VAIDYA
CHECK R. F. SCHALLER
DRAFTING C. L. CRITES
DESIGN C. L. CRITES
JOB MANAGER R. F. SCHALLER
DESIGN SUPERVISOR S. S. VAIDYA
FILE NAME = 581361_CPH_HWY_WZTS-6.dgn
DATE/TIME = 22-JUN-2021 12:32
USER = cortes

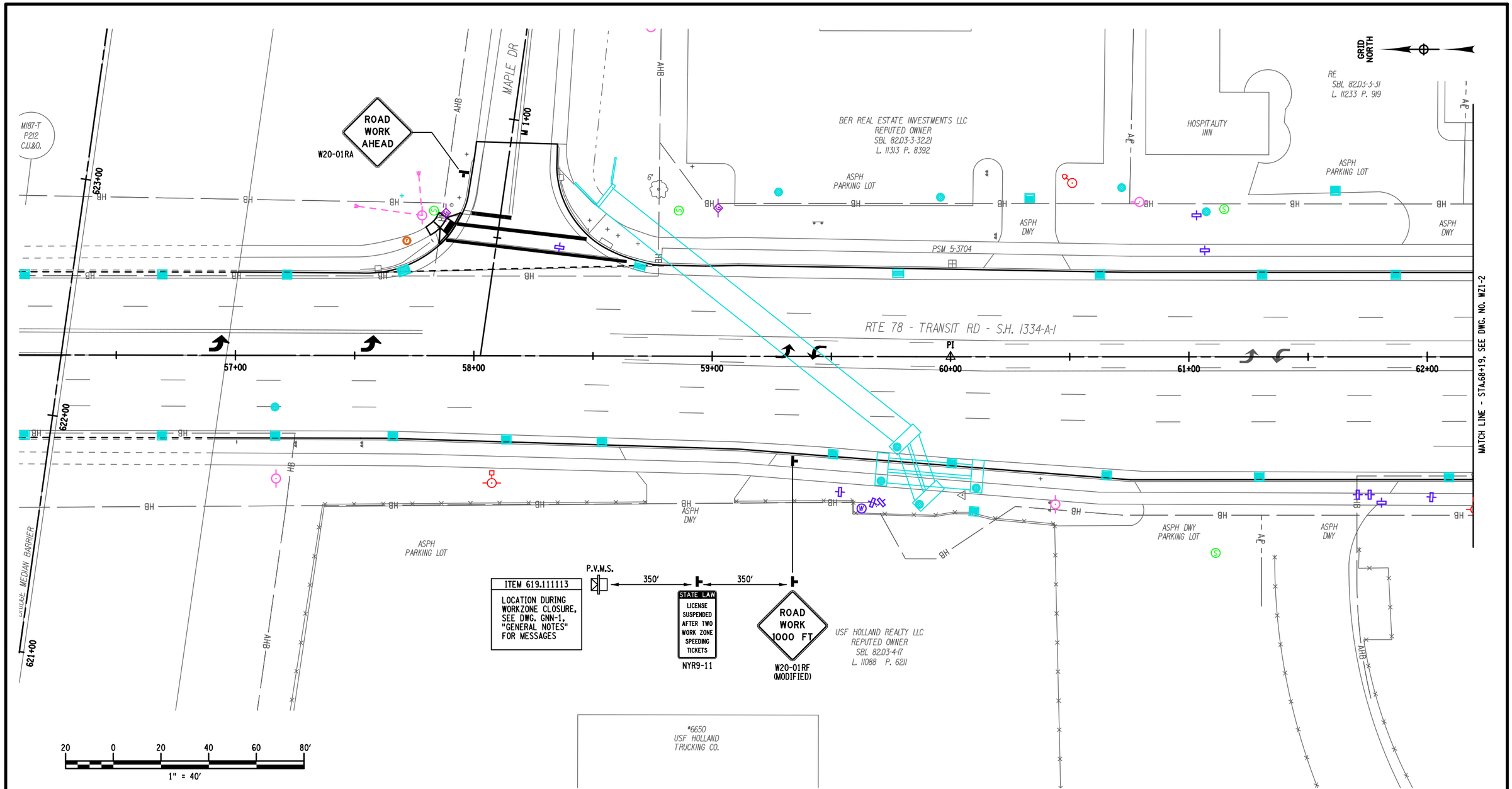

AFFIX SEAL: ON:	ALTERED BY: ON:
D264571 STATE OF NEW YORK ROBERT F. SCHALLER NO. 082465 LICENSED PROFESSIONAL ENGINEER	

ITEM SUMMARY:

ITEM 619.111113 - (PVMS) STANDARD SIZE - LINE OR CHARACTER MATRIX (LED)
NO OPTIONAL EQUIPMENT SPECIFIED, CELLULAR COM. W/NTCIP COMP (EA)

AS-BUILT REVISIONS DESCRIPTION OF ALTERATIONS:	NY 78, TRANSIT ROAD, S.H. 1334A-1	PIN 5813.61 NY 78 UTILITY QUALITY LEVEL D	BRIDGES	CULVERTS	ALL DIMENSIONS IN ft UNLESS OTHERWISE NOTED	CONTRACT NUMBER D264571
	FRENCH ROAD TO WEHRLE DRIVE				WORK ZONE TRAFFC CONTROL PHASE-1 / PLAN SHEET 1	DRAWING NO. WZ1-1
	TOWNS OF CHEEKTOWAGA & LANCASTER					SHEET NO. 24
	VILLAGE OF DEPEW					
	COUNTY: ERIE REGION: 05					

IT IS A VIOLATION OF LAW FOR ANY PERSON, UNLESS THEY ARE ACTING UNDER THE DIRECTION OF A LICENSED PROFESSIONAL ENGINEER, ARCHITECT, LANDSCAPE ARCHITECT, OR LAND SURVEYOR, TO ALTER AN ITEM IN ANY WAY. IF AN ITEM BEARING THE STAMP OF A LICENSED PROFESSIONAL IS ALTERED, THE ALTERING ENGINEER, ARCHITECT, LANDSCAPE ARCHITECT, OR LAND SURVEYOR SHALL STAMP THE DOCUMENT AND INCLUDE THE NOTATION "ALTERED BY" FOLLOWED BY THEIR SIGNATURE, THE DATE OF SUCH ALTERATION, AND A SPECIFIC DESCRIPTION OF THE ALTERATION.

NEW YORK STATE OF OPPORTUNITY. Department of Transportation

PROJECT MANAGER S. S. VAIDYA
CHECK C. L. CRITES
DRAFTING H. M. BELACHEW
CHECK R. F. SCHALLER
DESIGN H. M. BELACHEW
JOB MANAGER R. F. SCHALLER
DESIGN SUPERVISOR S. S. VAIDYA
FILE NAME = 581361_CPH_HWY_PHASE_1_WZTC_PLAN_SHEET-1.dgn
DATE/TIME = 22-JUN-2021 12:32
USER = cc rites

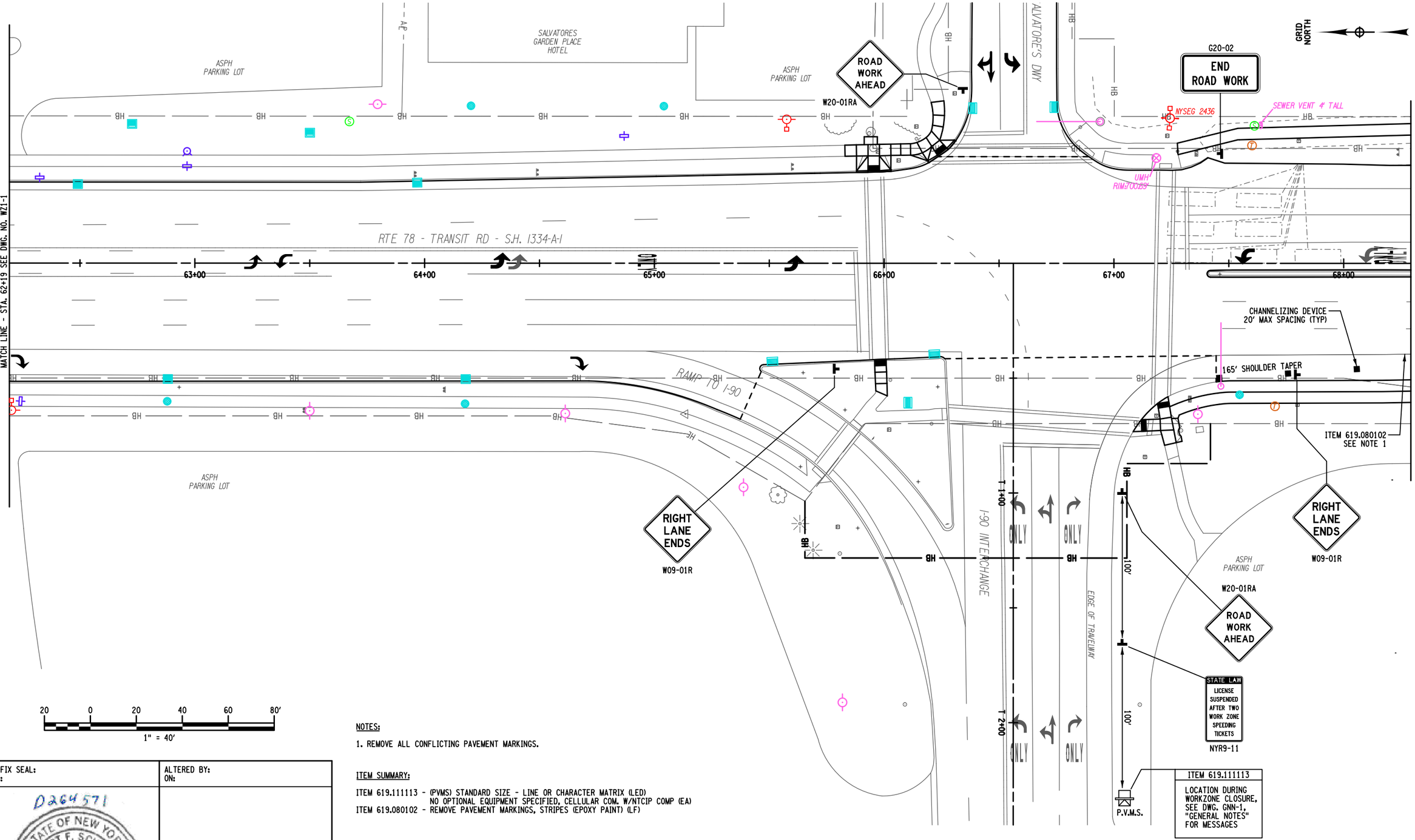

NOTES:

1. REMOVE ALL CONFLICTING PAVEMENT MARKINGS.

ITEM SUMMARY:

ITEM 619.111113 - (PVMS) STANDARD SIZE - LINE OR CHARACTER MATRIX (LED)
NO OPTIONAL EQUIPMENT SPECIFIED, CELLULAR COM. W/NTCIP COMP (EA)
ITEM 619.080102 - REMOVE PAVEMENT MARKINGS, STRIPES (EPOXY PAINT) (LF)

AFFIX SEAL: ON:	ALTERED BY: ON:
D264571 STATE OF NEW YORK ROBERT F. SCHALLER NO. 082465 LICENSED PROFESSIONAL ENGINEER	

AS-BUILT REVISIONS DESCRIPTION OF ALTERATIONS:	NY 78, TRANSIT ROAD, S.H. 1334A-1 FRENCH ROAD TO WEHRLE DRIVE TOWNS OF CHEEKTOWAGA & LANCASTER VILLAGE OF DEPEW COUNTY: ERIE REGION: 05	PIN 5813.61 NY 78 UTILITY QUALITY LEVEL D	BRIDGES	CULVERTS	ALL DIMENSIONS IN ft UNLESS OTHERWISE NOTED WORK ZONE TRAFFC CONTROL PHASE-1 / PLAN SHEET 2	CONTRACT NUMBER D264571 DRAWING NO. WZ1-2 SHEET NO. 25

IT IS A VIOLATION OF LAW FOR ANY PERSON, UNLESS THEY ARE ACTING UNDER THE DIRECTION OF A LICENSED PROFESSIONAL ENGINEER, ARCHITECT, LANDSCAPE ARCHITECT, OR LAND SURVEYOR, TO ALTER AN ITEM IN ANY WAY. IF AN ITEM BEARING THE STAMP OF A LICENSED PROFESSIONAL IS ALTERED, THE ALTERING ENGINEER, ARCHITECT, LANDSCAPE ARCHITECT, OR LAND SURVEYOR SHALL STAMP THE DOCUMENT AND INCLUDE THE NOTATION "ALTERED BY" FOLLOWED BY THEIR SIGNATURE, THE DATE OF SUCH ALTERATION, AND A SPECIFIC DESCRIPTION OF THE ALTERATION.

NEW YORK STATE OF OPPORTUNITY. Department of Transportation

PROJECT MANAGER S. S. VAIDYA
CHECK C. L. CRITES
DRAFTING H. M. BELACHEW
CHECK R. F. SCHALLER
DESIGN H. M. BELACHEW
JOB MANAGER R. F. SCHALLER
DESIGN SUPERVISOR S. S. VAIDYA
FILE NAME = 581361_CPH_HWY_PHASE_1_WZTC_PLAN_SHEET-2.dgn
DATE/TIME = 22-JUN-2021 12:32
USER = crites

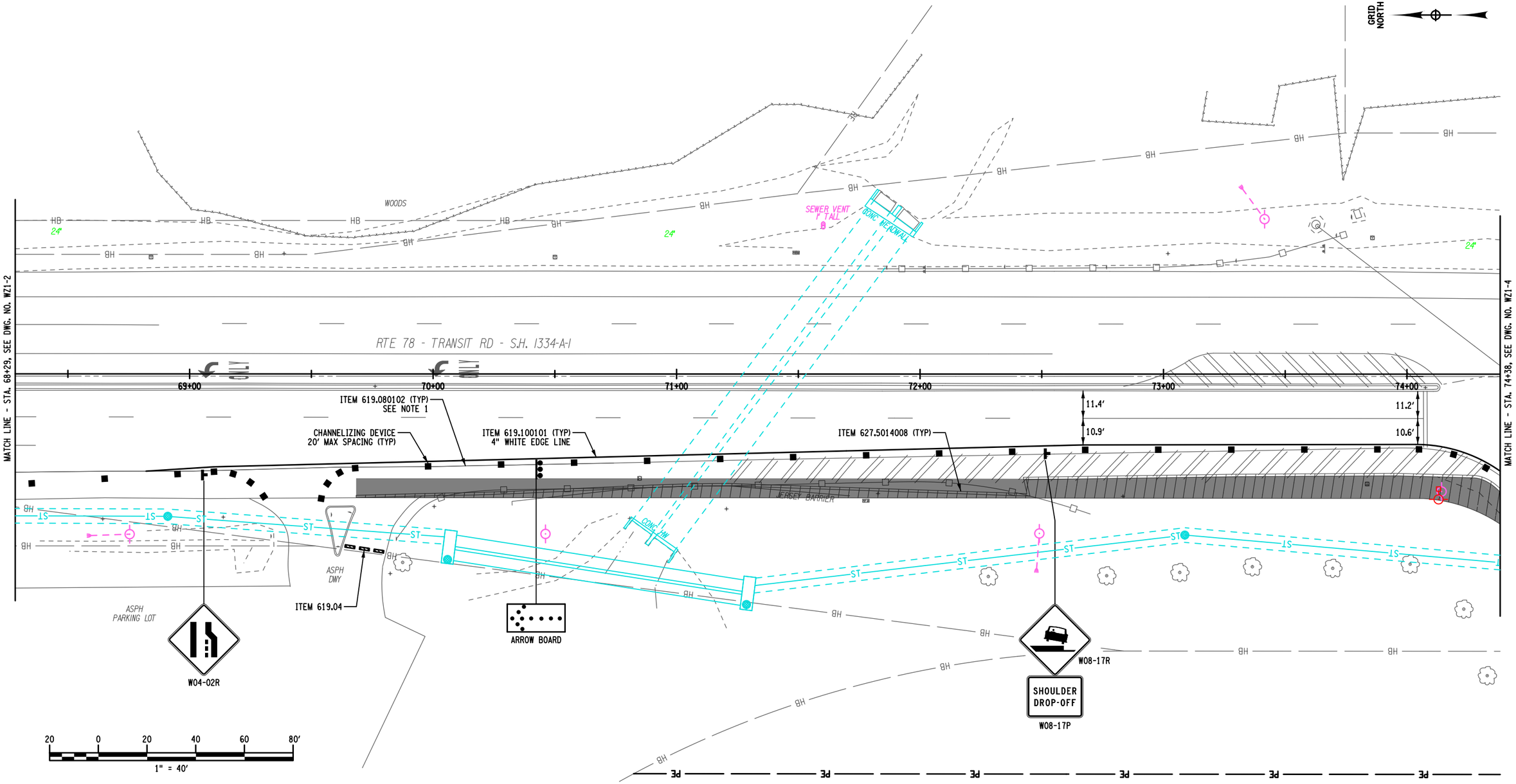

AFFIX SEAL:
ON:

ALTERED BY:
ON:

D264571

STATE OF NEW YORK
ROBERT F. SCHALLER
NO. 082465
LICENSED PROFESSIONAL ENGINEER

ITEM SUMMARY:

ITEM 619.04 - TYPE III CONSTRUCTION BARRICADE (EA)
ITEM 619.080102 - REMOVE PAVEMENT MARKINGS, STRIPES (EPOXY PAINT) (LF)
ITEM 619.100101 - INTERIM PAVEMENT MARKINGS, STRIPES (TRAFFIC PAINT) (LF)
ITEM 627.50140008 - CUTTING PAVEMENT (LF)

NOTES:

1. REMOVE ALL CONFLICTING PAVEMENT MARKINGS.

AS-BUILT REVISIONS DESCRIPTION OF ALTERATIONS:	NY 78, TRANSIT ROAD, S.H. 1334A-1 FRENCH ROAD TO WEHRLE DRIVE TOWNS OF CHEEKTOWAGA & LANCASTER VILLAGE OF DEPEW COUNTY: ERIE REGION: 05	PIN 5831.61 NY 78 UTILITY QUALITY LEVEL D	BRIDGES	CULVERTS	ALL DIMENSIONS IN ft UNLESS OTHERWISE NOTED WORK ZONE TRAFFC CONTROL PHASE-1 / PLAN SHEET 3	CONTRACT NUMBER D264571 DRAWING NO. WZ1-3 SHEET NO. 26

IT IS A VIOLATION OF LAW FOR ANY PERSON, UNLESS THEY ARE ACTING UNDER THE DIRECTION OF A LICENSED PROFESSIONAL ENGINEER, ARCHITECT, LANDSCAPE ARCHITECT, OR LAND SURVEYOR, TO ALTER AN ITEM IN ANY WAY. IF AN ITEM BEARING THE STAMP OF A LICENSED PROFESSIONAL IS ALTERED, THE ALTERING ENGINEER, ARCHITECT, LANDSCAPE ARCHITECT, OR LAND SURVEYOR SHALL STAMP THE DOCUMENT AND INCLUDE THE NOTATION "ALTERED BY" FOLLOWED BY THEIR SIGNATURE, THE DATE OF SUCH ALTERATION, AND A SPECIFIC DESCRIPTION OF THE ALTERATION.

NEW YORK STATE OF OPPORTUNITY. Department of Transportation

PROJECT MANAGER S. S. VAIDYA
CHECK C. L. CRITES
DRAFTING H. M. BELACHEW
CHECK P. M. LAUGEMAN
DESIGN H. M. BELACHEW
JOB MANAGER R. F. SCHALLER
DESIGN SUPERVISOR S. S. VAIDYA
FILE NAME = 581361_CPH_HWY_PHASE_1_WZTC_PLAN_SHEET-3.dgn
DATE/TIME = 22-JUN-2021 12:32
USER = cortes

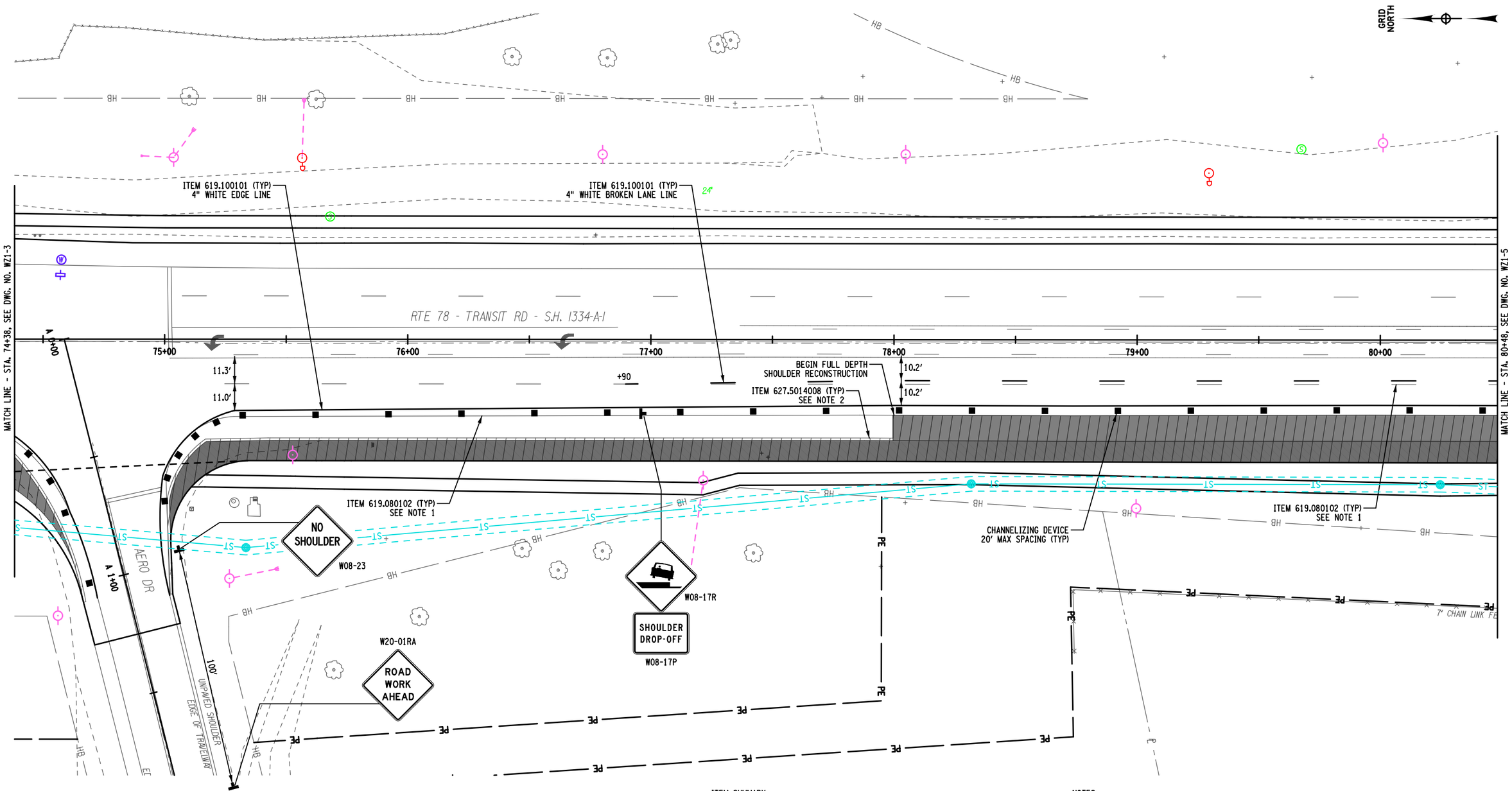

20 0 20 40 60 80'

1" = 40'

ITEM SUMMARY:

ITEM 619.080102 - REMOVE PAVEMENT MARKINGS, STRIPES (EPOXY PAINT) (LF)
ITEM 619.100101 - INTERIM PAVEMENT MARKINGS, STRIPES (TRAFFIC PAINT) (LF)
ITEM 627.50140008 - CUTTING PAVEMENT (LF)

NOTES:

1. REMOVE ALL CONFLICTING PAVEMENT MARKINGS.
2. FROM STATION 63+20 TO STATION 78+00, THE EXISTING SHOULDER IS A FULL DEPTH HEAVY DUTY SHOULDER AS PER RECORD PLAN D254088. THEREFORE, BEGINNING AT STATION 78+00, THE PAVEMENT SHALL BE SAWCUT AT THE RIGHT EDGE LINE AND RECONSTRUCTION OF THE EXISTING SHOULDER INTO A FULL DEPTH HIGHWAY SECTION SHALL BEGIN.

AFFIX SEAL:
ON:

ALTERED BY:
ON:

D264571
STATE OF NEW YORK
ROBERT F. SCHALLER
NO. 082465
LICENSED PROFESSIONAL ENGINEER

AS-BUILT REVISIONS
DESCRIPTION OF ALTERATIONS:

NY 78, TRANSIT ROAD, S.H. 1334A-1	PIN 5813.61	BRIDGES	CULVERTS	ALL DIMENSIONS IN ft UNLESS OTHERWISE NOTED	CONTRACT NUMBER D264571
FRENCH ROAD TO WEHRLE DRIVE	NY 78			WORK ZONE TRAFFC CONTROL PHASE-1 / PLAN SHEET 4	DRAWING NO. WZ1-4
TOWNS OF CHEEKTOWAGA & LANCASTER	UTILITY QUALITY LEVEL D				SHEET NO. 27
VILLAGE OF DEPEW					
COUNTY: ERIE REGION: 05					

IT IS A VIOLATION OF LAW FOR ANY PERSON, UNLESS THEY ARE ACTING UNDER THE DIRECTION OF A LICENSED PROFESSIONAL ENGINEER, ARCHITECT, LANDSCAPE ARCHITECT, OR LAND SURVEYOR, TO ALTER AN ITEM IN ANY WAY. IF AN ITEM BEARING THE STAMP OF A LICENSED PROFESSIONAL IS ALTERED, THE ALTERING ENGINEER, ARCHITECT, LANDSCAPE ARCHITECT, OR LAND SURVEYOR SHALL STAMP THE DOCUMENT AND INCLUDE THE NOTATION "ALTERED BY" FOLLOWED BY THEIR SIGNATURE, THE DATE OF SUCH ALTERATION, AND A SPECIFIC DESCRIPTION OF THE ALTERATION.

NEW YORK STATE OF OPPORTUNITY. Department of Transportation

DESIGN SUPERVISOR S. S. VAIDYA | JOB MANAGER R. F. SCHALLER | DESIGN H. M. BELACHEW | CHECK P. M. LAUGEMAN | DRAFTING H. M. BELACHEW | CHECK C. L. CRITES | PROJECT MANAGER S. S. VAIDYA

FILE NAME = 581361_CPH_HWY_PHASE_1_WZTC_PLAN_SHEET-4.dgn
DATE/TIME = 22-JUN-2021 12:32
USER = crites

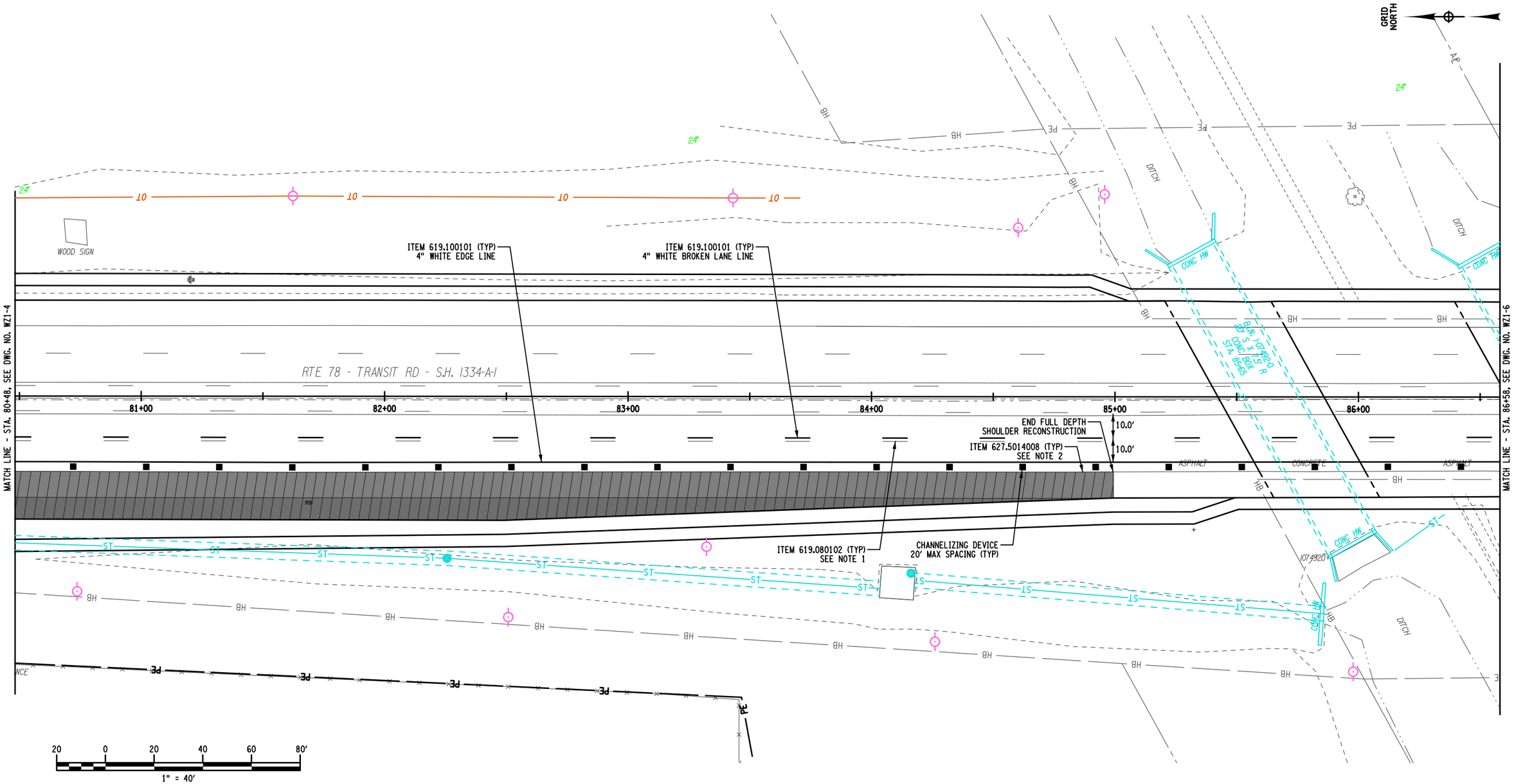

AFFIX SEAL: ON:	ALTERED BY: ON:
D264571 STATE OF NEW YORK ROBERT F. SCHALLER NO. 082465 LICENSED PROFESSIONAL ENGINEER	

ITEM SUMMARY:

ITEM 619.080102 - REMOVE PAVEMENT MARKINGS, STRIPES (EPOXY PAINT) (LF)
ITEM 619.100101 - INTERIM PAVEMENT MARKINGS, STRIPES (TRAFFIC PAINT) (LF)
ITEM 627.50140008 - CUTTING PAVEMENT (LF)

NOTES:

1. REMOVE ALL CONFLICTING PAVEMENT MARKINGS.
2. THE PAVEMENT SHALL BE SAWCUT AT THE RIGHT EDGE LINE AND THE EXISTING SHOULDER SHALL BE RECONSTRUCTED INTO A FULL DEPTH HIGHWAY SECTION. THE RECONSTRUCTION SHALL END AT APPROXIMATELY STATION 85+00 PRIOR TO THE CONCRETE SURFACE OF B.I.N. 1074920.

AS-BUILT REVISIONS DESCRIPTION OF ALTERATIONS:	NY 78, TRANSIT ROAD, S.H. 1334A-1 FRENCH ROAD TO WEHRLE DRIVE TOWNS OF CHEEKTOWAGA & LANCASTER VILLAGE OF DEPEW COUNTY: ERIE REGION: 05	PIN 5813.61 NY 78 UTILITY QUALITY LEVEL D	BRIDGES	CULVERTS	ALL DIMENSIONS IN ft UNLESS OTHERWISE NOTED WORK ZONE TRAFFC CONTROL PHASE-1 / PLAN SHEET 5	CONTRACT NUMBER D264571 DRAWING NO. WZ1-5 SHEET NO. 28

IT IS A VIOLATION OF LAW FOR ANY PERSON, UNLESS THEY ARE ACTING UNDER THE DIRECTION OF A LICENSED PROFESSIONAL ENGINEER, ARCHITECT, LANDSCAPE ARCHITECT, OR LAND SURVEYOR, TO ALTER AN ITEM IN ANY WAY. IF AN ITEM BEARING THE STAMP OF A LICENSED PROFESSIONAL IS ALTERED, THE ALTERING ENGINEER, ARCHITECT, LANDSCAPE ARCHITECT, OR LAND SURVEYOR SHALL STAMP THE DOCUMENT AND INCLUDE THE NOTATION "ALTERED BY" FOLLOWED BY THEIR SIGNATURE, THE DATE OF SUCH ALTERATION, AND A SPECIFIC DESCRIPTION OF THE ALTERATION.

NEW YORK STATE OF OPPORTUNITY. Department of Transportation

PROJECT MANAGER S. S. VAIDYA
CHECK C. L. CRITES
DRAFTING H. M. BELACHEW
CHECK P. M. LAUGEMAN
DESIGN H. M. BELACHEW
JOB MANAGER R. F. SCHALLER
DESIGN SUPERVISOR S. S. VAIDYA
FILE NAME = 581361_CPH_HWY_PHASE_1_WZTC_PLAN_SHEET-5.dgn
DATE/TIME = 22-JUN-2021 12:32
USER = ccrites

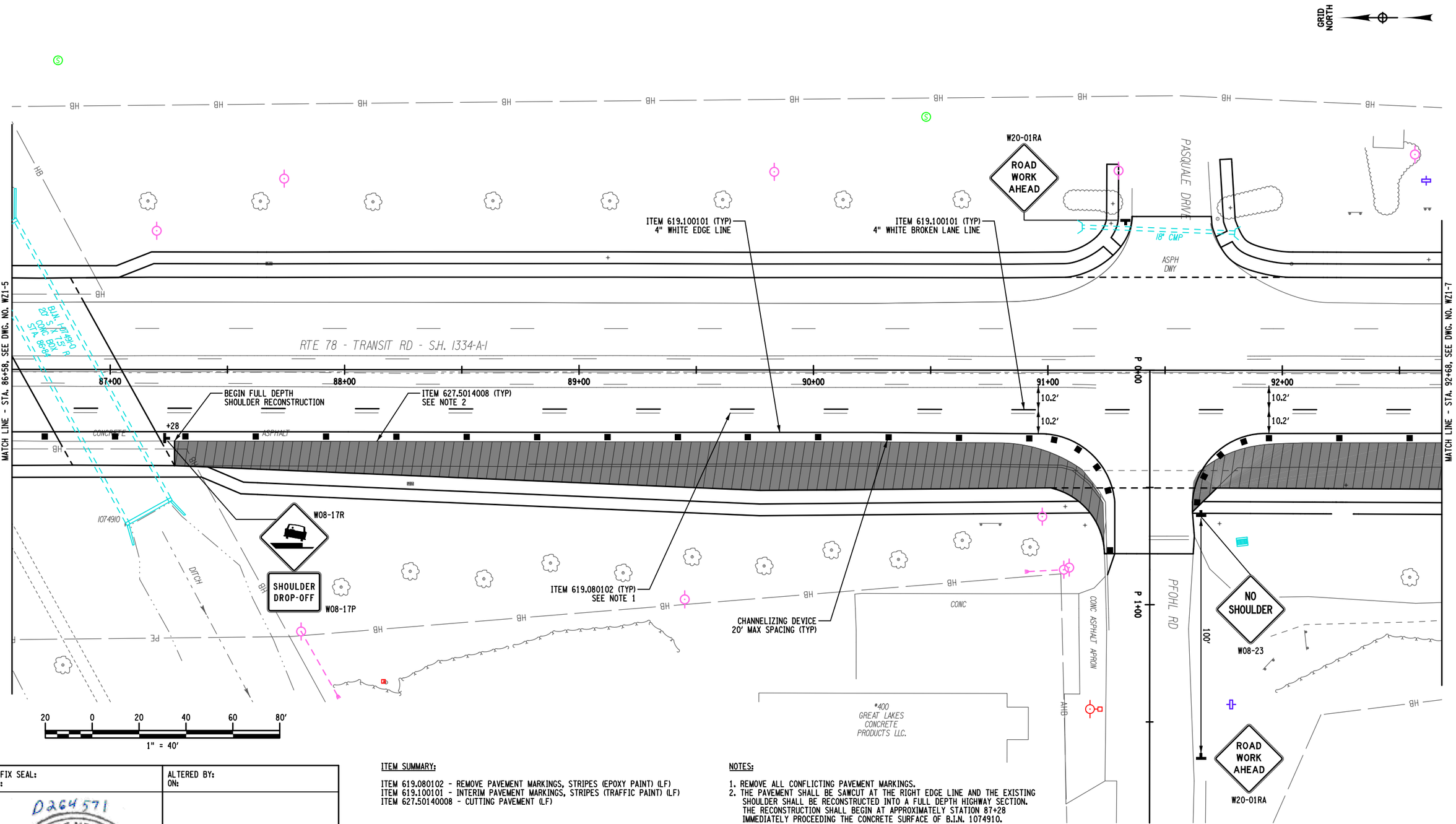

ITEM SUMMARY:

ITEM 619.080102 - REMOVE PAVEMENT MARKINGS, STRIPES (EPOXY PAINT) (LF)
ITEM 619.100101 - INTERIM PAVEMENT MARKINGS, STRIPES (TRAFFIC PAINT) (LF)
ITEM 627.50140008 - CUTTING PAVEMENT (LF)

NOTES:

1. REMOVE ALL CONFLICTING PAVEMENT MARKINGS.
2. THE PAVEMENT SHALL BE SAWCUT AT THE RIGHT EDGE LINE AND THE EXISTING SHOULDER SHALL BE RECONSTRUCTED INTO A FULL DEPTH HIGHWAY SECTION. THE RECONSTRUCTION SHALL BEGIN AT APPROXIMATELY STATION 87+28 IMMEDIATELY PROCEEDING THE CONCRETE SURFACE OF B.I.N. 1074910.

AFFIX SEAL:
ON:

D264571

STATE OF NEW YORK
ROBERT F. SCHALLER
NO. 082465
LICENSED PROFESSIONAL ENGINEER

ALTERED BY:
ON:

AS-BUILT REVISIONS
DESCRIPTION OF ALTERATIONS:

NY 78, TRANSIT ROAD, S.H. 1334A-1	PIN 5813.61	BRIDGES	CULVERTS	ALL DIMENSIONS IN ft UNLESS OTHERWISE NOTED
FRENCH ROAD TO WEHRLE DRIVE	NY 78			WORK ZONE TRAFFIC CONTROL
TOWNS OF CHEEKTOWAGA & LANCASTER	UTILITY QUALITY LEVEL D			PHASE-1 / PLAN SHEET 6
VILLAGE OF DEPEW				
COUNTY: ERIE REGION: 05				

CONTRACT NUMBER
D264571

DRAWING NO. WZ1-6
SHEET NO. 29

IT IS A VIOLATION OF LAW FOR ANY PERSON, UNLESS THEY ARE ACTING UNDER THE DIRECTION OF A LICENSED PROFESSIONAL ENGINEER, ARCHITECT, LANDSCAPE ARCHITECT, OR LAND SURVEYOR, TO ALTER AN ITEM IN ANY WAY. IF AN ITEM BEARING THE STAMP OF A LICENSED PROFESSIONAL IS ALTERED, THE ALTERING ENGINEER, ARCHITECT, LANDSCAPE ARCHITECT, OR LAND SURVEYOR SHALL STAMP THE DOCUMENT AND INCLUDE THE NOTATION "ALTERED BY" FOLLOWED BY THEIR SIGNATURE, THE DATE OF SUCH ALTERATION, AND A SPECIFIC DESCRIPTION OF THE ALTERATION.

NEW YORK STATE OF OPPORTUNITY. Department of Transportation

PROJECT MANAGER S. S. VAIDYA
CHECK C. L. CRITES
DRAFTING H. M. BELACHEW
CHECK P. M. LAUGEMAN
DESIGN H. M. BELACHEW
JOB MANAGER R. F. SCHALLER
DESIGN SUPERVISOR S. S. VAIDYA

FILE NAME = 581361_CPH_HWY_PHASE_1_WZTC_PLAN_SHEET-6.dgn
DATE/TIME = 22-JUN-2021 12:33
USER = ccrites

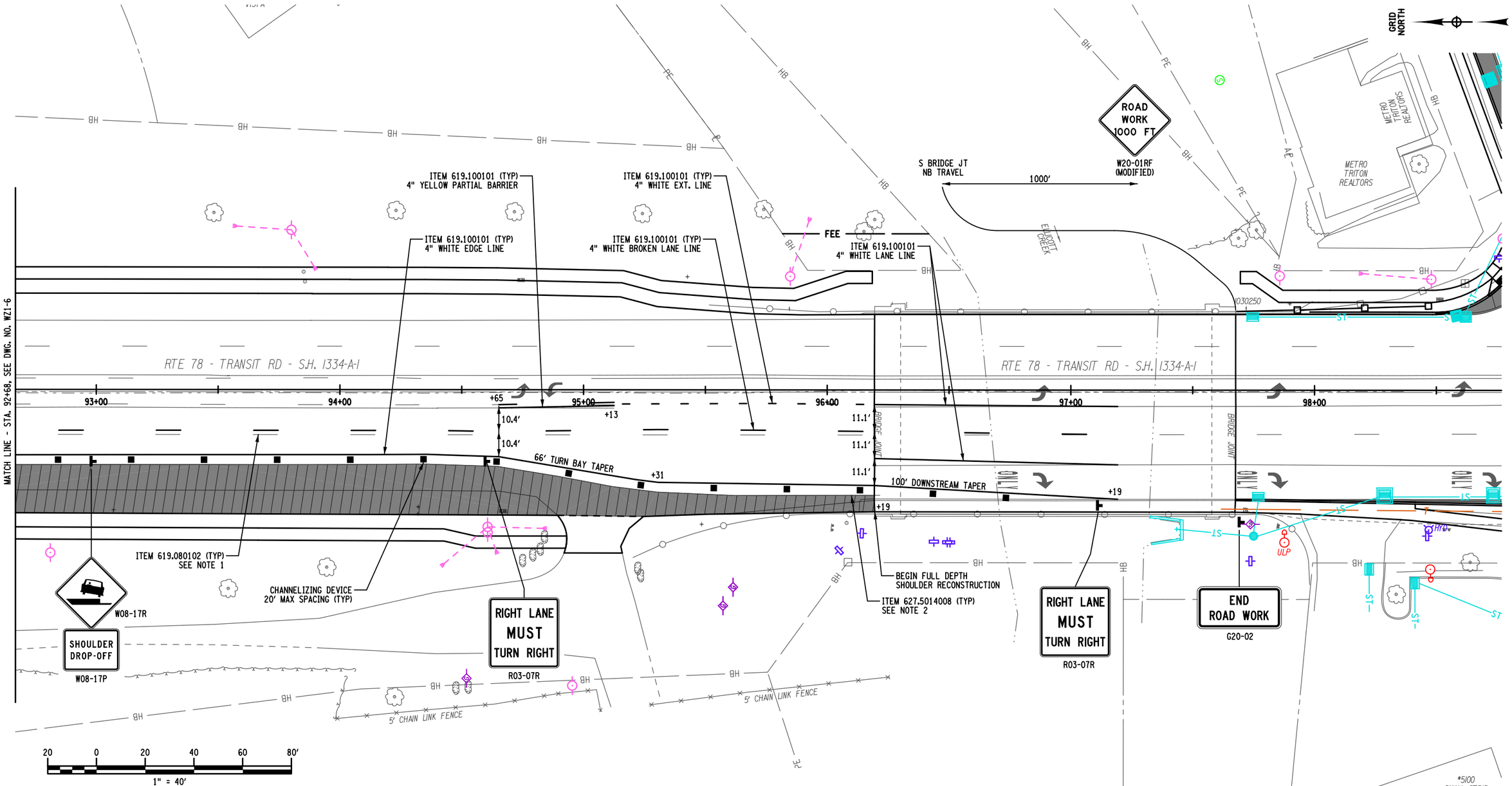

AFFIX SEAL:
ON:

ALTERED BY:
ON:

D264571
STATE OF NEW YORK
ROBERT F. SCHALLER
NO. 082465
LICENSED PROFESSIONAL ENGINEER

ITEM SUMMARY:

ITEM 619.080102 - REMOVE PAVEMENT MARKINGS, STRIPES (EPOXY PAINT) (LF)
ITEM 619.100101 - INTERIM PAVEMENT MARKINGS, STRIPES (TRAFFIC PAINT) (LF)
ITEM 627.50140008 - CUTTING PAVEMENT (LF)

NOTES:

1. REMOVE ALL CONFLICTING PAVEMENT MARKINGS.
2. THE PAVEMENT SHALL BE SAWCUT AT THE RIGHT EDGE LINE AND THE EXISTING SHOULDER SHALL BE RECONSTRUCTED INTO A FULL DEPTH HIGHWAY SECTION. THE RECONSTRUCTION SHALL END AT APPROXIMATELY STATION 96+19 PRIOR TO THE CONCRETE SURFACE OF B.I.N. 1030250.

AS-BUILT REVISIONS DESCRIPTION OF ALTERATIONS:	NY 78, TRANSIT ROAD, S.H. 1334A-1 FRENCH ROAD TO WEHRLE DRIVE TOWNS OF CHEEKTOWAGA & LANCASTER VILLAGE OF DEPEW COUNTY: ERIE REGION: 05	PIN 5813.61 NY 78 UTILITY QUALITY LEVEL D	BRIDGES	CULVERTS	ALL DIMENSIONS IN ft UNLESS OTHERWISE NOTED WORK ZONE TRAFFC CONTROL PHASE-1 / PLAN SHEET 7	CONTRACT NUMBER D264571 DRAWING NO. WZ1-7 SHEET NO. 30

IT IS A VIOLATION OF LAW FOR ANY PERSON, UNLESS THEY ARE ACTING UNDER THE DIRECTION OF A LICENSED PROFESSIONAL ENGINEER, ARCHITECT, LANDSCAPE ARCHITECT, OR LAND SURVEYOR, TO ALTER AN ITEM IN ANY WAY. IF AN ITEM BEARING THE STAMP OF A LICENSED PROFESSIONAL IS ALTERED, THE ALTERING ENGINEER, ARCHITECT, LANDSCAPE ARCHITECT, OR LAND SURVEYOR SHALL STAMP THE DOCUMENT AND INCLUDE THE NOTATION "ALTERED BY" FOLLOWED BY THEIR SIGNATURE, THE DATE OF SUCH ALTERATION, AND A SPECIFIC DESCRIPTION OF THE ALTERATION.

NEW YORK STATE OF OPPORTUNITY. Department of Transportation

DESIGN SUPERVISOR S. S. VAIDYA | JOB MANAGER R. F. SCHALLER | DESIGN H. M. BELACHEW | CHECK P. M. LAUGEMAN | DRAFTING H. M. BELACHEW | CHECK C. L. CRITES | PROJECT MANAGER S. S. VAIDYA

FILE NAME = 581361_CPH_HWY_PHASE_1_WZTC_PLAN_SHEET-7.dgn
DATE/TIME = 22-JUN-2021 12:33
USER = crites

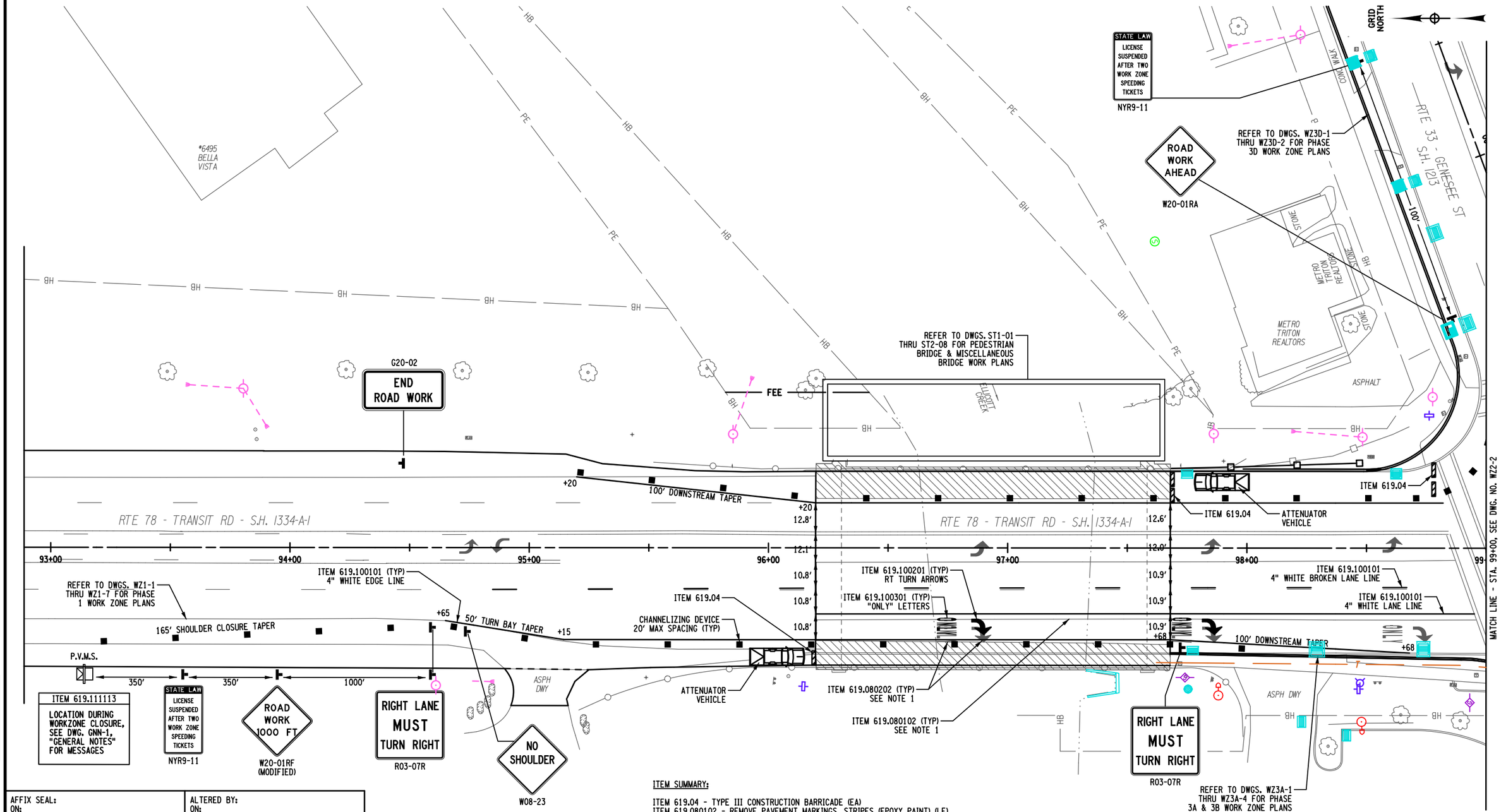

ITEM SUMMARY:

ITEM 619.04 - TYPE III CONSTRUCTION BARRICADE (EA)
ITEM 619.080102 - REMOVE PAVEMENT MARKINGS, STRIPES (EPOXY PAINT) (LF)
ITEM 619.080202 - REMOVE PAVEMENT MARKING SYMBOLS OR LETTERS (EPOXY PAINT) (EA)
ITEM 619.100101 - INTERIM PAVEMENT MARKINGS, STRIPES (TRAFFIC PAINT) (LF)
ITEM 619.100201 - INTERIM PAVEMENT MARKINGS, SYMBOLS (TRAFFIC PAINT) (EA)
ITEM 619.100301 - INTERIM PAVEMENT MARKINGS, LETTERS (TRAFFIC PAINT) (EA)
ITEM 619.111113 - (PVMS) STANDARD SIZE - LINE OR CHARACTER MATRIX (LED)
NO OPTIONAL EQUIPMENT SPECIFIED, CELLULAR COM. W/NTCIP COMP (EA)

NOTES:

1. REMOVE ALL CONFLICTING PAVEMENT MARKINGS.

AFFIX SEAL:
ON:

D264571

STATE OF NEW YORK
ROBERT F. SCHALLER
LICENSED PROFESSIONAL ENGINEER
NO. 082465

ALTERED BY:
ON:

AS-BUILT REVISIONS
DESCRIPTION OF ALTERATIONS:

NY 78, TRANSIT ROAD, S.H. 1334A-1
FRENCH ROAD TO WEHRLE DRIVE
TOWNS OF CHEEKTOWAGA & LANCASTER
VILLAGE OF DEPEW
COUNTY: ERIE REGION: 05

PIN 5813.61
NY 78
UTILITY QUALITY LEVEL D

BRIDGES

CULVERTS

ALL DIMENSIONS IN ft UNLESS OTHERWISE NOTED

WORK ZONE TRAFFIC CONTROL
PHASE-2 / PLAN SHEET 1

CONTRACT NUMBER
D264571

DRAWING NO. WZ2-1
SHEET NO. 31

IT IS A VIOLATION OF LAW FOR ANY PERSON, UNLESS THEY ARE ACTING UNDER THE DIRECTION OF A LICENSED PROFESSIONAL ENGINEER, ARCHITECT, LANDSCAPE ARCHITECT, OR LAND SURVEYOR, TO ALTER AN ITEM IN ANY WAY. IF AN ITEM BEARING THE STAMP OF A LICENSED PROFESSIONAL IS ALTERED, THE ALTERING ENGINEER, ARCHITECT, LANDSCAPE ARCHITECT, OR LAND SURVEYOR SHALL STAMP THE DOCUMENT AND INCLUDE THE NOTATION "ALTERED BY" FOLLOWED BY THEIR SIGNATURE, THE DATE OF SUCH ALTERATION, AND A SPECIFIC DESCRIPTION OF THE ALTERATION.

NEW YORK STATE OF OPPORTUNITY. Department of Transportation

PROJECT MANAGER S. S. VAIDYA
CHECK C. L. CRITES
DRAFTING H. M. BELACHEW
CHECK P. M. LAUGEMAN
DESIGN H. M. BELACHEW
JOB MANAGER R. F. SCHALLER
DESIGN SUPERVISOR S. S. VAIDYA
FILE NAME = 581361_CPH_HWY_PHASE_2_WZTC_PLAN_SHEET1.dgn
DATE/TIME = 22-JUN-2021 12:33
USER = ccrites

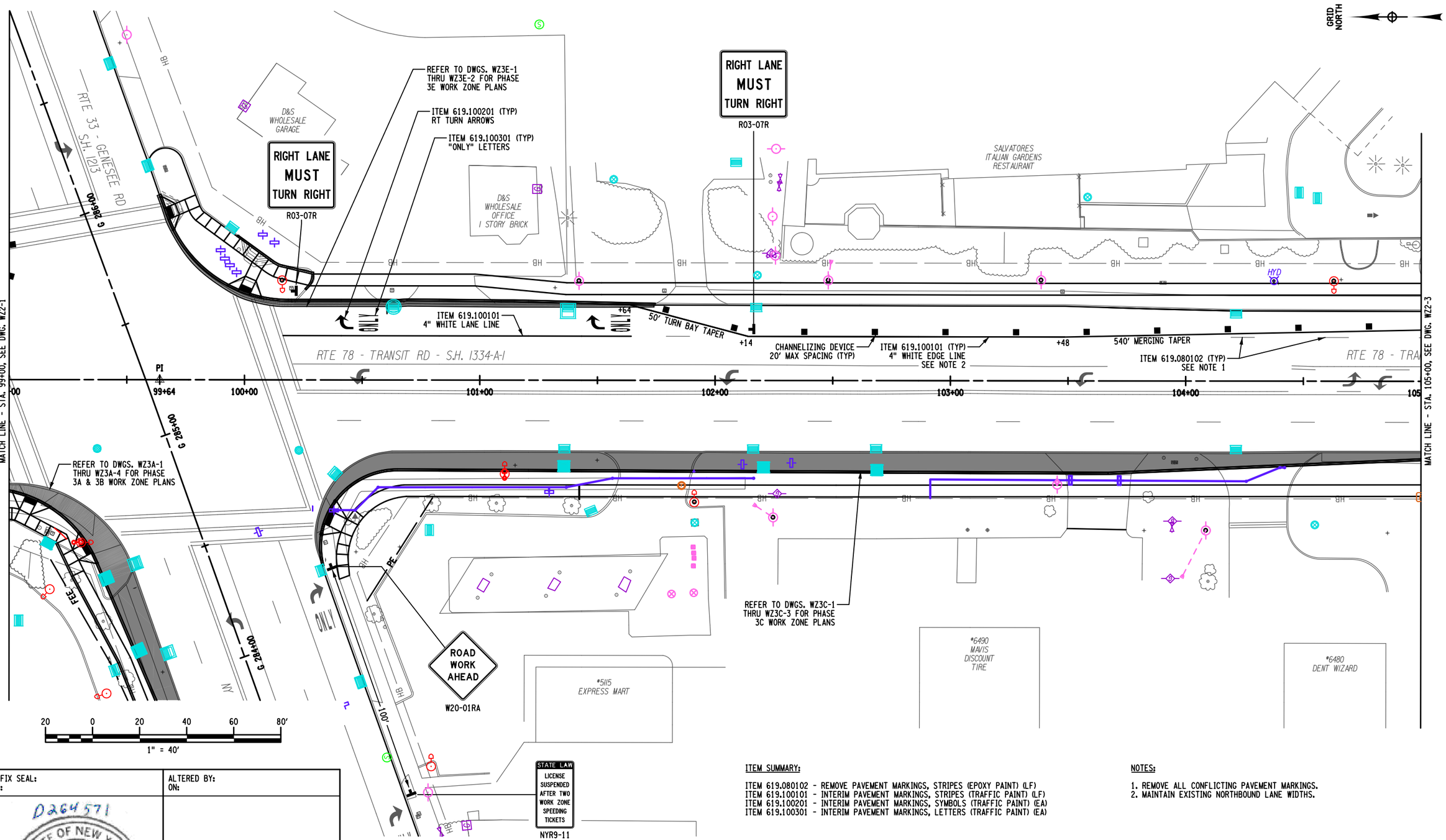

ITEM SUMMARY:

ITEM 619.080102 - REMOVE PAVEMENT MARKINGS, STRIPES (EPOXY PAINT) (LF)
ITEM 619.100101 - INTERIM PAVEMENT MARKINGS, STRIPES (TRAFFIC PAINT) (LF)
ITEM 619.100201 - INTERIM PAVEMENT MARKINGS, SYMBOLS (TRAFFIC PAINT) (EA)
ITEM 619.100301 - INTERIM PAVEMENT MARKINGS, LETTERS (TRAFFIC PAINT) (EA)

NOTES:

1. REMOVE ALL CONFLICTING PAVEMENT MARKINGS.
2. MAINTAIN EXISTING NORTHBOUND LANE WIDTHS.

AFFIX SEAL: ON:

ALTERED BY: ON:

D264571

STATE OF NEW YORK · ROBERT F. SCHALLER · LICENSED PROFESSIONAL ENGINEER · NO. 082465

AS-BUILT REVISIONS
DESCRIPTION OF ALTERATIONS:

NY 78, TRANSIT ROAD, S.H. 1334A-1	PIN 5813.61	BRIDGES	CULVERTS	ALL DIMENSIONS IN ft UNLESS OTHERWISE NOTED
FRENCH ROAD TO WEHRLE DRIVE	NY 78			WORK ZONE TRAFFIC CONTROL PHASE-2 / PLAN SHEET 2
TOWNS OF CHEEKTOWAGA & LANCASTER	UTILITY QUALITY LEVEL D			
VILLAGE OF DEPEW				
COUNTY: ERIE REGION: 05				

CONTRACT NUMBER D264571

DRAWING NO. WZ2-2

SHEET NO. 32

IT IS A VIOLATION OF LAW FOR ANY PERSON, UNLESS THEY ARE ACTING UNDER THE DIRECTION OF A LICENSED PROFESSIONAL ENGINEER, ARCHITECT, LANDSCAPE ARCHITECT, OR LAND SURVEYOR, TO ALTER AN ITEM IN ANY WAY. IF AN ITEM BEARING THE STAMP OF A LICENSED PROFESSIONAL IS ALTERED, THE ALTERING ENGINEER, ARCHITECT, LANDSCAPE ARCHITECT, OR LAND SURVEYOR SHALL STAMP THE DOCUMENT AND INCLUDE THE NOTATION "ALTERED BY" FOLLOWED BY THEIR SIGNATURE, THE DATE OF SUCH ALTERATION, AND A SPECIFIC DESCRIPTION OF THE ALTERATION.

NEW YORK STATE OF OPPORTUNITY. Department of Transportation

DESIGN SUPERVISOR S. S. VAIDYA JOB MANAGER R. F. SCHALLER DESIGN H. M. BELACHEW CHECK P. M. LAUGEMAN DRAFTING H. M. BELACHEW CHECK C. L. CRITES PROJECT MANAGER S. S. VAIDYA

FILE NAME = 581361_CPH_HWY_PHASE_2_WZTC_PLAN_SHEET2.dgn
DATE/TIME = 22-JUN-2021 12:33
USER = cortes

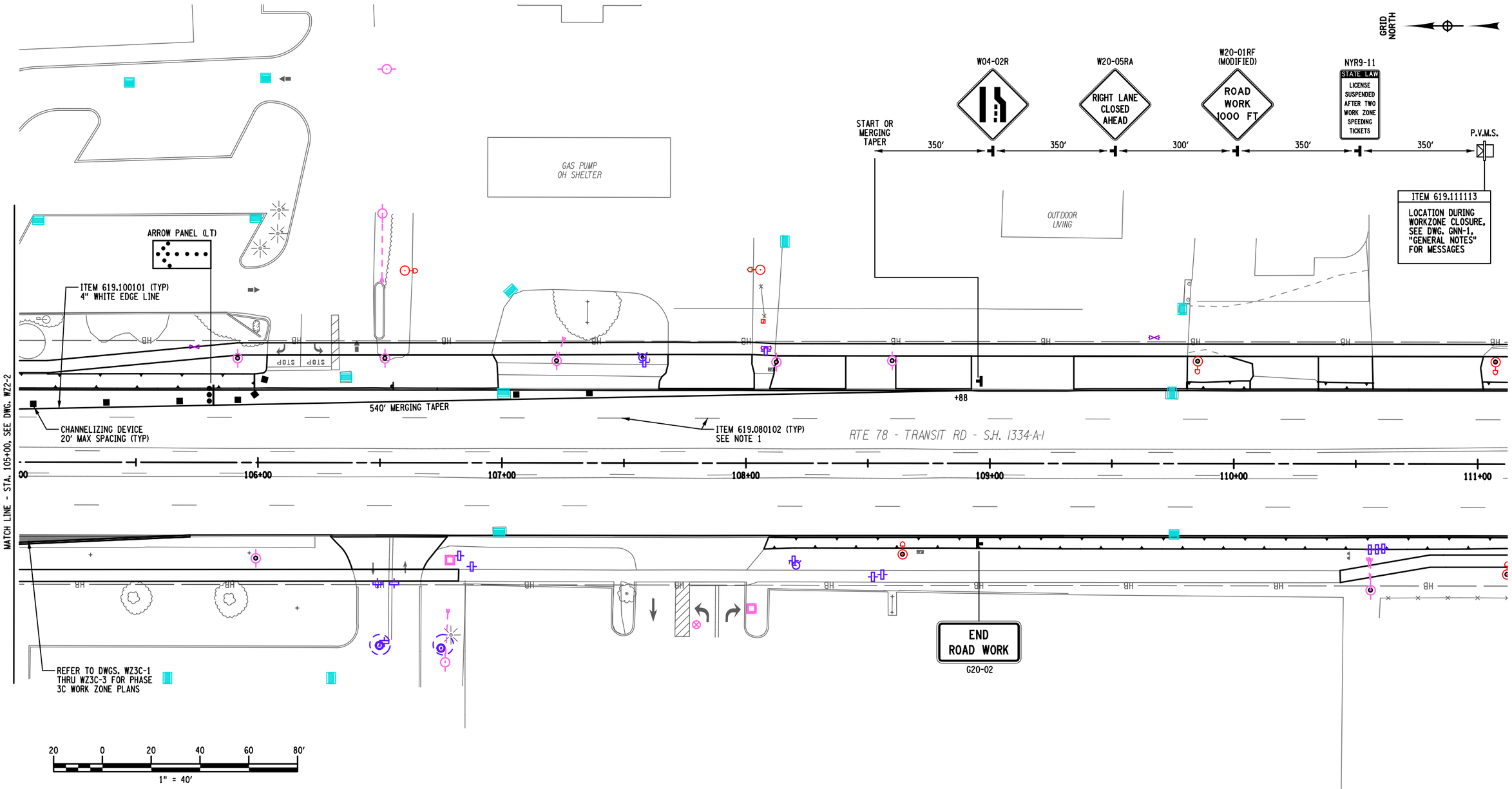

AFFIX SEAL:
ON:

ALTERED BY:
ON:

D264571

STATE OF NEW YORK
ROBERT F. SCHALLER
NO. 082465
LICENSED PROFESSIONAL ENGINEER

ITEM SUMMARY:

ITEM 619.080102 - REMOVE PAVEMENT MARKINGS, STRIPES (EPOXY PAINT) (LF)
ITEM 619.100101 - INTERIM PAVEMENT MARKINGS, STRIPES (TRAFFIC PAINT) (LF)
ITEM 619.111113 - (PVMS) STANDARD SIZE - LINE OR CHARACTER MATRIX (LED)
NO OPTIONAL EQUIPMENT SPECIFIED, CELLULAR COM. W/NTCIP COMP (EA)

NOTES:

1. REMOVE ALL CONFLICTING PAVEMENT MARKINGS.

AS-BUILT REVISIONS
DESCRIPTION OF ALTERATIONS:

NY 78, TRANSIT ROAD, S.H. 1334A-1	PIN 5813.61	BRIDGES	CULVERTS	ALL DIMENSIONS IN ft UNLESS OTHERWISE NOTED
FRENCH ROAD TO WEHRLE DRIVE	NY 78			WORK ZONE TRAFFIC CONTROL PHASE-2 / PLAN SHEET 3
TOWNS OF CHEEKTOWAGA & LANCASTER	UTILITY QUALITY LEVEL D			
VILLAGE OF DEPEW				
COUNTY: ERIE REGION: 05				

CONTRACT NUMBER
D264571

DRAWING NO. WZ2-3
SHEET NO. 33

IT IS A VIOLATION OF LAW FOR ANY PERSON, UNLESS THEY ARE ACTING UNDER THE DIRECTION OF A LICENSED PROFESSIONAL ENGINEER, ARCHITECT, LANDSCAPE ARCHITECT, OR LAND SURVEYOR, TO ALTER AN ITEM IN ANY WAY. IF AN ITEM BEARING THE STAMP OF A LICENSED PROFESSIONAL IS ALTERED, THE ALTERING ENGINEER, ARCHITECT, LANDSCAPE ARCHITECT, OR LAND SURVEYOR SHALL STAMP THE DOCUMENT AND INCLUDE THE NOTATION "ALTERED BY" FOLLOWED BY THEIR SIGNATURE, THE DATE OF SUCH ALTERATION, AND A SPECIFIC DESCRIPTION OF THE ALTERATION.

NEW YORK STATE OF OPPORTUNITY. Department of Transportation

PROJECT MANAGER S. S. VAIDYA
CHECK C. L. CRITES
DRAFTING H. M. BELACHEW
CHECK P. M. LAUGEMAN
DESIGN H. M. BELACHEW
JOB MANAGER R. F. SCHALLER
DESIGN SUPERVISOR S. S. VAIDYA

FILE NAME = 581361_CPH_HWY_PHASE_2_WZTC_PLAN_SHEET3.dgn
DATE/TIME = 22-JUN-2021 12:33
USER = cc rites

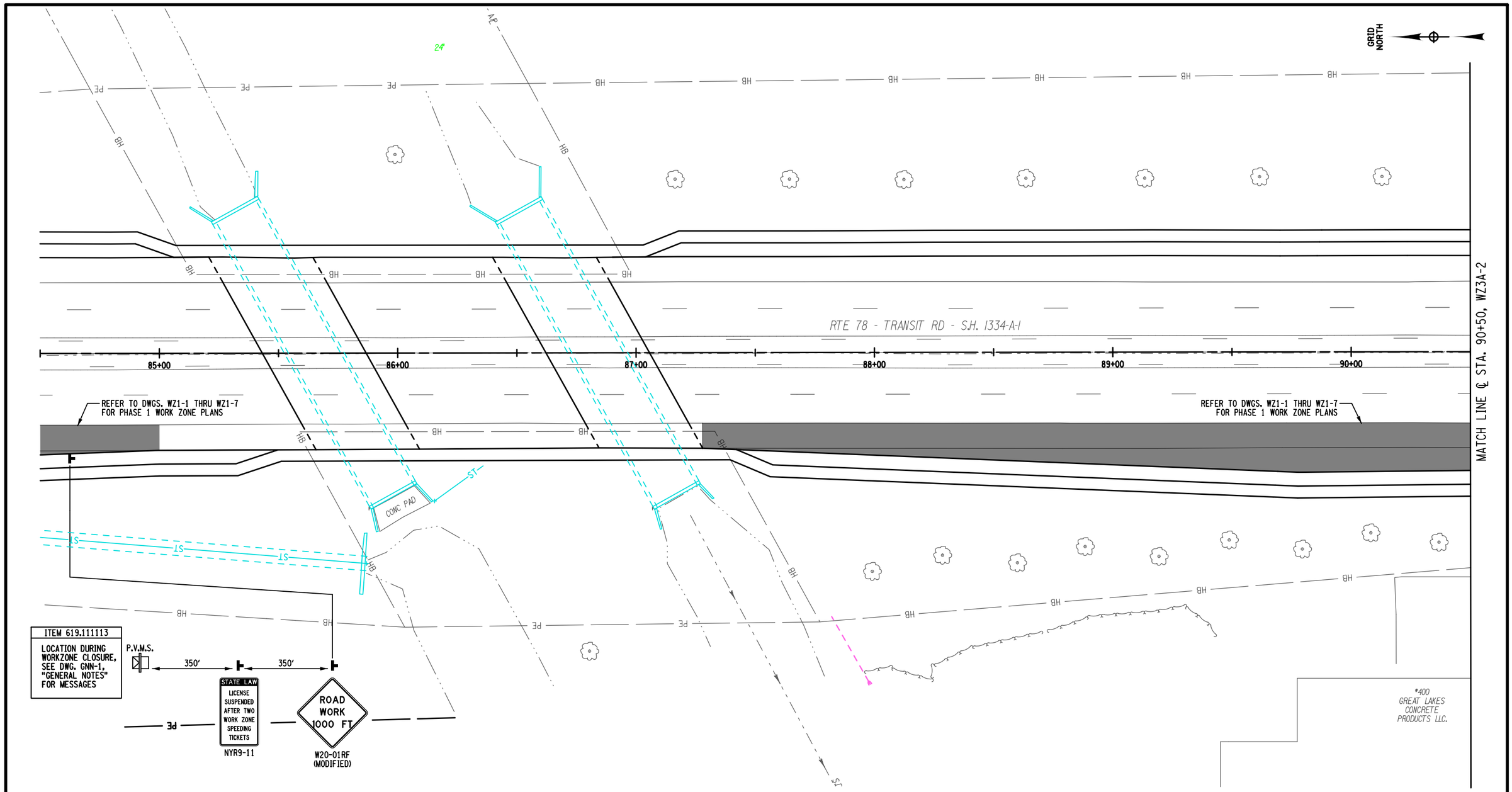

20 0 20 40 60 80'

1" = 40'

ITEM SUMMARY

ITEM 619.111113 - (PVMS) STANDARD SIZE - LINE OR CHARACTER MATRIX (LED)
NO OPTIONAL EQUIPMENT SPECIFIED, CELLULAR COM. W/NTCIP COMP (EA)

NOTES:

1. REMOVE ALL CONFLICTING PAVEMENT MARKINGS

AFFIX SEAL:
ON:

D264571

STATE OF NEW YORK
ROBERT F. SCHALLER
NO. 082465
LICENSED PROFESSIONAL ENGINEER

ALTERED BY:
ON:

AS-BUILT REVISIONS
DESCRIPTION OF ALTERATIONS:

NY 78, TRANSIT ROAD, S.H. 1334A-1	PIN 5813.61	BRIDGES	CULVERTS	ALL DIMENSIONS IN ft UNLESS OTHERWISE NOTED
FRENCH ROAD TO WEHRLE DRIVE	NY 78			WORK ZONE TRAFFIC CONTROL
TOWNS OF CHEEKTOWAGA & LANCASTER	UTILITY QUALITY LEVEL D			PHASE 3A & 3B / PLAN SHEET 1
VILLAGE OF DEPEW				
COUNTY: ERIE REGION: 05				

CONTRACT NUMBER D264571

DRAWING NO. WZ3A-1

SHEET NO. 34

IT IS A VIOLATION OF LAW FOR ANY PERSON, UNLESS THEY ARE ACTING UNDER THE DIRECTION OF A LICENSED PROFESSIONAL ENGINEER, ARCHITECT, LANDSCAPE ARCHITECT, OR LAND SURVEYOR, TO ALTER AN ITEM IN ANY WAY. IF AN ITEM BEARING THE STAMP OF A LICENSED PROFESSIONAL IS ALTERED, THE ALTERING ENGINEER, ARCHITECT, LANDSCAPE ARCHITECT, OR LAND SURVEYOR SHALL STAMP THE DOCUMENT AND INCLUDE THE NOTATION "ALTERED BY" FOLLOWED BY THEIR SIGNATURE, THE DATE OF SUCH ALTERATION, AND A SPECIFIC DESCRIPTION OF THE ALTERATION.

NEW YORK STATE OF OPPORTUNITY. Department of Transportation

DESIGN SUPERVISOR S. S. VAIDYA | JOB MANAGER R. F. SCHALLER | DESIGN P.M. LAUGEMAN | CHECK R. F. SCHALLER | DRAFTING P.M. LAUGEMAN | CHECK R. F. SCHALLER | PROJECT MANAGER S. S. VAIDYA

FILE NAME = 581361_CPH_HWY_PHASE_3A_WZTC_PLAN_SHEET1.dgn
DATE/TIME = 22-JUN-2021 12:33
USER = corites

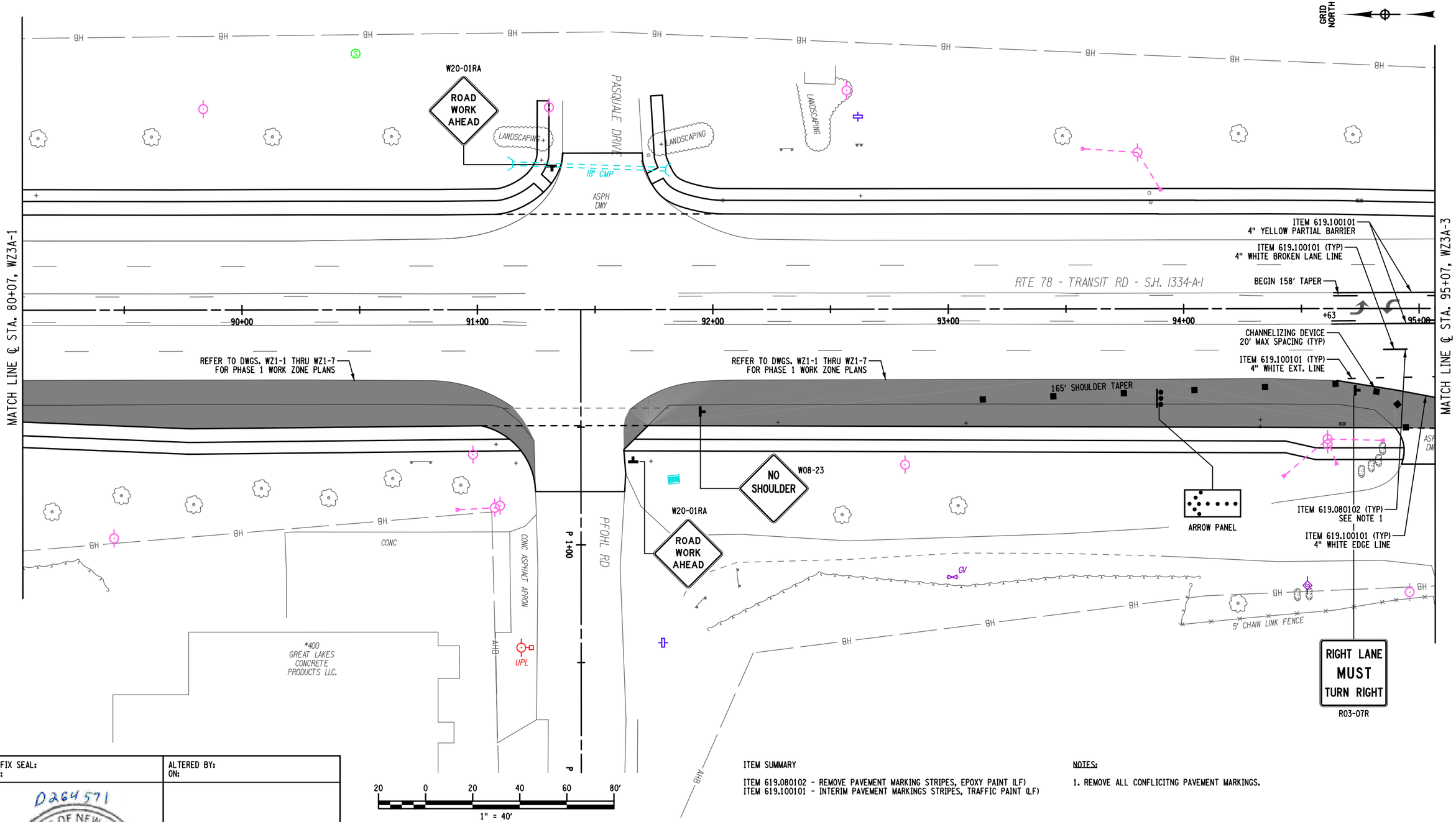

ITEM SUMMARY

ITEM 619.080102 - REMOVE PAVEMENT MARKING STRIPES, EPOXY PAINT (LF)
ITEM 619.100101 - INTERIM PAVEMENT MARKINGS STRIPES, TRAFFIC PAINT (LF)

NOTES:

1. REMOVE ALL CONFLICITNG PAVEMENT MARKINGS.

AFFIX SEAL:
ON:

D264571

STATE OF NEW YORK
ROBERT F. SCHALLER
NO. 082465
LICENSED PROFESSIONAL ENGINEER

ALTERED BY:
ON:

AS-BUILT REVISIONS
DESCRIPTION OF ALTERATIONS:

NY 78, TRANSIT ROAD, S.H. 1334A-1	PIN 5813.61	BRIDGES	CULVERTS	ALL DIMENSIONS IN ft UNLESS OTHERWISE NOTED	CONTRACT NUMBER D264571
FRENCH ROAD TO WEHRLE DRIVE	NY 78			WORK ZONE TRAFFIC CONTROL	
TOWNS OF CHEEKTOWAGA & LANCASTER	UTILITY QUALITY LEVEL D			PHASE 3A & 3B / PLAN SHEET 2	DRAWING NO. WZ3A-2
VILLAGE OF DEPEW					SHEET NO. 35
COUNTY: ERIE REGION: 05					

IT IS A VIOLATION OF LAW FOR ANY PERSON, UNLESS THEY ARE ACTING UNDER THE DIRECTION OF A LICENSED PROFESSIONAL ENGINEER, ARCHITECT, LANDSCAPE ARCHITECT, OR LAND SURVEYOR, TO ALTER AN ITEM IN ANY WAY. IF AN ITEM BEARING THE STAMP OF A LICENSED PROFESSIONAL IS ALTERED, THE ALTERING ENGINEER, ARCHITECT, LANDSCAPE ARCHITECT, OR LAND SURVEYOR SHALL STAMP THE DOCUMENT AND INCLUDE THE NOTATION "ALTERED BY" FOLLOWED BY THEIR SIGNATURE, THE DATE OF SUCH ALTERATION, AND A SPECIFIC DESCRIPTION OF THE ALTERATION.

NEW YORK STATE OF OPPORTUNITY. Department of Transportation

PROJECT MANAGER S. S. VAIDYA
CHECK R. F. SCHALLER
DRAFTING P.M. LAUGEMAN
CHECK R. F. SCHALLER
DESIGN P.M. LAUGEMAN
CHECK R. F. SCHALLER
JOB MANAGER R. F. SCHALLER
DESIGN SUPERVISOR S. S. VAIDYA

FILE NAME = 581361_CPH_HWY_PHASE_3A_WZTC_PLAN_SHEET2.dgn
DATE/TIME = 22-JUN-2021 12:33
USER = corrtes

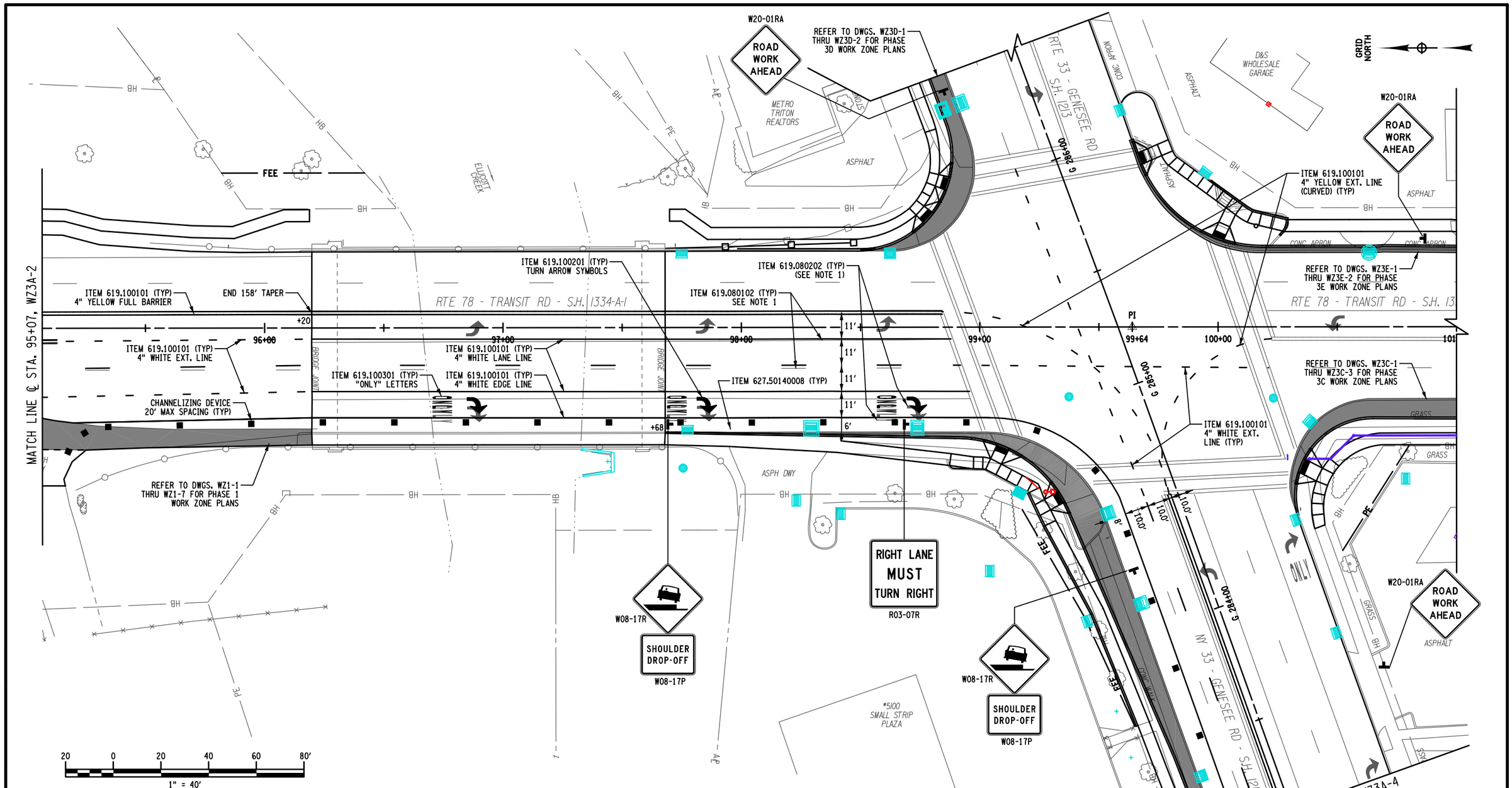

ITEM SUMMARY

ITEM 619.080102 REMOVE PAVEMENT MARKING STRIPES, EPOXY PAINT (LF)
ITEM 619.080202 REMOVE PAVEMENT MARKING LETTERS OR SYMBOLS, EPOXY PAINT (EA)
ITEM 619.100101 INTERIM PAVEMENT MARKINGS, STRIPES (TRAFFIC PAINT) (LF)
ITEM 619.100201 INTERIM PAVEMENT MARKINGS, SYMBOLS (TRAFFIC PAINT) (EA)
ITEM 619.100301 INTERIM PAVEMENT MARKINGS, LETTERS (TRAFFIC PAINT) (EA)
ITEM 627.5014008 - CUTTING PAVEMENT (LF)

NOTES

1. REMOVE ALL CONFLICTING PAVEMENT MARKINGS.

AFFIX SEAL:
ON:

ALTERED BY:
ON:

D264571

STATE OF NEW YORK
ROBERT F. SCHALLER
LICENSED PROFESSIONAL ENGINEER
NO. 082465

AS-BUILT REVISIONS
DESCRIPTION OF ALTERATIONS:

NY 78, TRANSIT ROAD, S.H. 1334A-1
FRENCH ROAD TO WEHRLE DRIVE
TOWNS OF CHEEKTOWAGA & LANCASTER
VILLAGE OF DEPEW
COUNTY: ERIE REGION: 05

PIN 5813.61
NY 78
UTILITY QUALITY LEVEL D

BRIDGES

CULVERTS

ALL DIMENSIONS IN ft UNLESS OTHERWISE NOTED

WORK ZONE TRAFFIC CONTROL
PHASE 3A & 3B / PLAN SHEET 3

CONTRACT NUMBER
D264571

DRAWING NO. WZ3A-3
SHEET NO. 36

IT IS A VIOLATION OF LAW FOR ANY PERSON, UNLESS THEY ARE ACTING UNDER THE DIRECTION OF A LICENSED PROFESSIONAL ENGINEER, ARCHITECT, LANDSCAPE ARCHITECT, OR LAND SURVEYOR, TO ALTER AN ITEM IN ANY WAY. IF AN ITEM BEARING THE STAMP OF A LICENSED PROFESSIONAL IS ALTERED, THE ALTERING ENGINEER, ARCHITECT, LANDSCAPE ARCHITECT, OR LAND SURVEYOR SHALL STAMP THE DOCUMENT AND INCLUDE THE NOTATION "ALTERED BY" FOLLOWED BY THEIR SIGNATURE, THE DATE OF SUCH ALTERATION, AND A SPECIFIC DESCRIPTION OF THE ALTERATION.

NEW YORK STATE OF OPPORTUNITY. Department of Transportation

DESIGN SUPERVISOR S. S. VAIDYA | JOB MANAGER R. F. SCHALLER | DESIGN P.M. LAUGEMAN | CHECK R. F. SCHALLER | DRAFTING P.M. LAUGEMAN | CHECK R. F. SCHALLER | PROJECT MANAGER S. S. VAIDYA

FILE NAME = 581361_CPH_HWY_PHASE_3A_WZTC_PLAN_SHEET3.dgn
DATE/TIME = 22-JUN-2021 12:33
USER = cortes

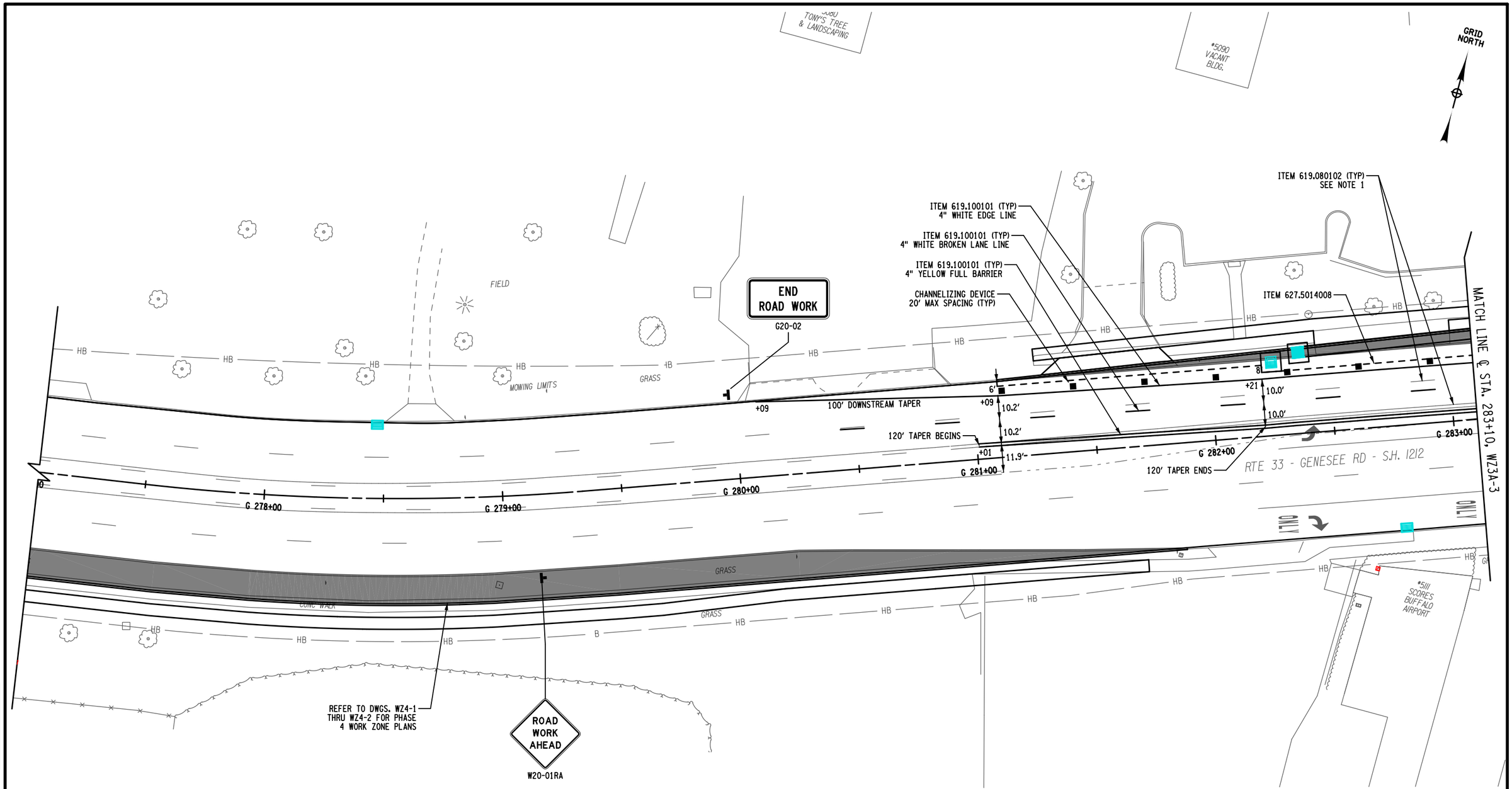

20 0 20 40 60 80'

1" = 40'

ITEM SUMMARY

ITEM 619.080102 REMOVE PAVEMENT MARKING STRIPES, EPOXY PAINT (LF)
ITEM 619.100101 INTERIM PAVEMENT MARKINGS, STRIPES (TRAFFIC PAINT) (LF)
ITEM 627.5014008 - CUTTING PAVEMENT (LF)

NOTES

1. REMOVE ALL CONFLICTING PAVEMENT MARKINGS.

AFFIX SEAL:
ON:

D264571

STATE OF NEW YORK · ROBERT F. SCHALLER · LICENSED PROFESSIONAL ENGINEER · NO. 082465

ALTERED BY:
ON:

AS-BUILT REVISIONS
DESCRIPTION OF ALTERATIONS:

NY 78, TRANSIT ROAD, S.H. 1334A-1	PIN 5813.61	BRIDGES	CULVERTS	ALL DIMENSIONS IN ft UNLESS OTHERWISE NOTED
FRENCH ROAD TO WEHRLE DRIVE	NY 78			WORK ZONE TRAFFIC CONTROL PHASE 3A & 3B / PLAN SHEET 4
TOWNS OF CHEEKTOWAGA & LANCASTER	UTILITY QUALITY LEVEL D			
VILLAGE OF DEPEW				
COUNTY: ERIE REGION: 05				

CONTRACT NUMBER D264571

DRAWING NO. WZ3A-4

SHEET NO. 37

IT IS A VIOLATION OF LAW FOR ANY PERSON, UNLESS THEY ARE ACTING UNDER THE DIRECTION OF A LICENSED PROFESSIONAL ENGINEER, ARCHITECT, LANDSCAPE ARCHITECT, OR LAND SURVEYOR, TO ALTER AN ITEM IN ANY WAY. IF AN ITEM BEARING THE STAMP OF A LICENSED PROFESSIONAL IS ALTERED, THE ALTERING ENGINEER, ARCHITECT, LANDSCAPE ARCHITECT, OR LAND SURVEYOR SHALL STAMP THE DOCUMENT AND INCLUDE THE NOTATION "ALTERED BY" FOLLOWED BY THEIR SIGNATURE, THE DATE OF SUCH ALTERATION, AND A SPECIFIC DESCRIPTION OF THE ALTERATION.

NEW YORK STATE OF OPPORTUNITY. Department of Transportation

DESIGN SUPERVISOR S. S. VAIDYA JOB MANAGER R. F. SCHALLER DESIGN P.M. LAUGEMAN CHECK R. F. SCHALLER DRAFTING P. M. LAUGEMAN CHECK R. F. SCHALLER PROJECT MANAGER S. S. VAIDYA

FILE NAME = 581361_CPH_HWY_PHASE_3A_WZTC_PLAN_SHEET4.dgn
DATE/TIME = 22-JUN-2021 12:33
USER = ccrites

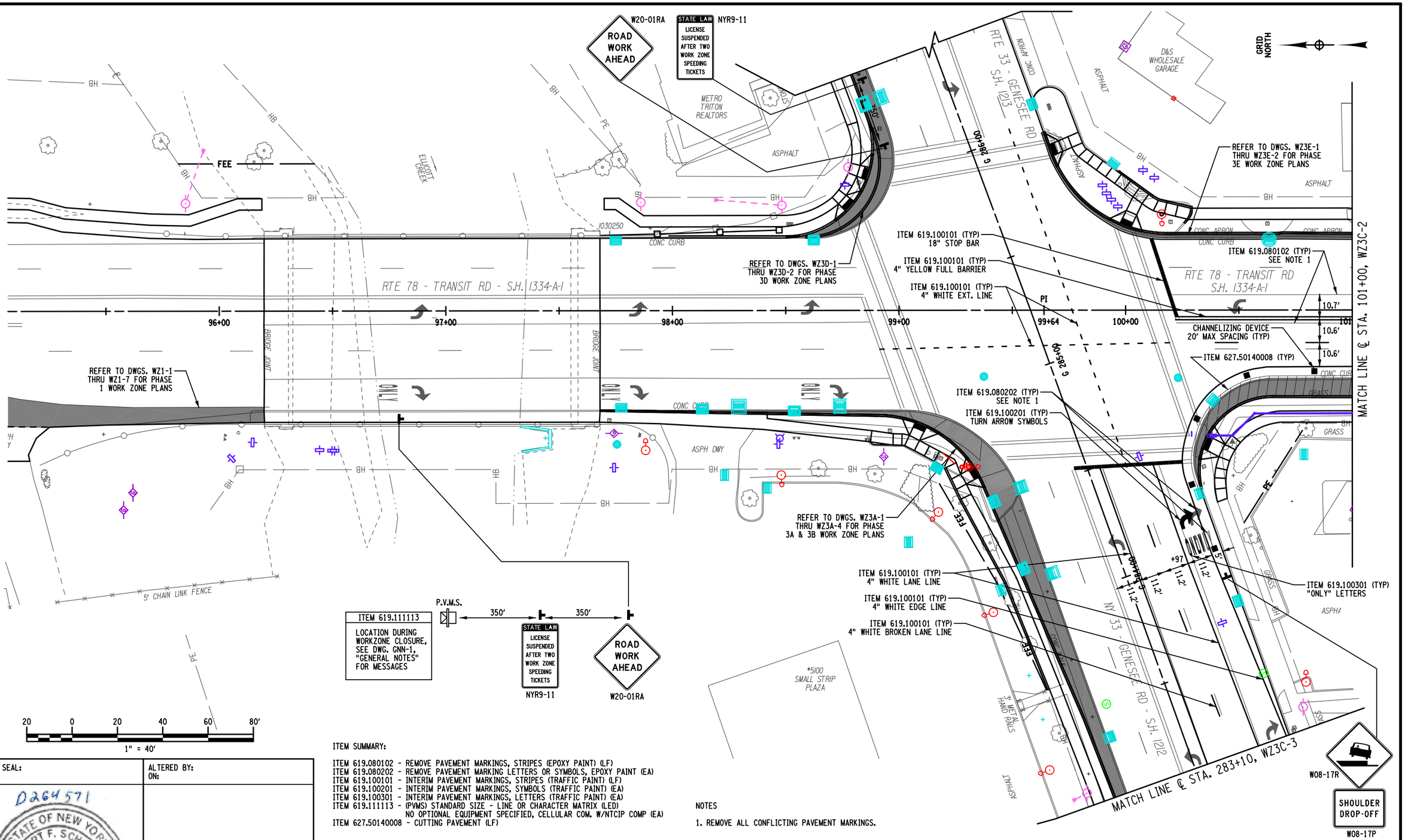

ITEM SUMMARY:

ITEM 619.080102 - REMOVE PAVEMENT MARKINGS, STRIPES (EPOXY PAINT) (LF)
ITEM 619.080202 - REMOVE PAVEMENT MARKING LETTERS OR SYMBOLS, EPOXY PAINT (EA)
ITEM 619.100101 - INTERIM PAVEMENT MARKINGS, STRIPES (TRAFFIC PAINT) (LF)
ITEM 619.100201 - INTERIM PAVEMENT MARKINGS, SYMBOLS (TRAFFIC PAINT) (EA)
ITEM 619.100301 - INTERIM PAVEMENT MARKINGS, LETTERS (TRAFFIC PAINT) (EA)
ITEM 619.111113 - (PVMS) STANDARD SIZE - LINE OR CHARACTER MATRIX (LED)
NO OPTIONAL EQUIPMENT SPECIFIED, CELLULAR COM. W/NTCIP COMP (EA)
ITEM 627.50140008 - CUTTING PAVEMENT (LF)

NOTES

1. REMOVE ALL CONFLICTING PAVEMENT MARKINGS.

AFFIX SEAL:
ON:

ALTERED BY:
ON:

D264571
STATE OF NEW YORK
ROBERT F. SCHALLER
NO. 082465
LICENSED PROFESSIONAL ENGINEER

AS-BUILT REVISIONS DESCRIPTION OF ALTERATIONS:	NY 78, TRANSIT ROAD, S.H. 1334A-1 FRENCH ROAD TO WEHRLE DRIVE TOWNS OF CHEEKTOWAGA & LANCASTER VILLAGE OF DEPEW COUNTY: ERIE REGION: 05	PIN 5813.61 NY 78 UTILITY QUALITY LEVEL D	BRIDGES	CULVERTS	ALL DIMENSIONS IN ft UNLESS OTHERWISE NOTED WORK ZONE TRAFFIC CONTROL PHASE 3C / PLAN SHEET 1	CONTRACT NUMBER D264571 DRAWING NO. WZ3C-1 SHEET NO. 38

IT IS A VIOLATION OF LAW FOR ANY PERSON, UNLESS THEY ARE ACTING UNDER THE DIRECTION OF A LICENSED PROFESSIONAL ENGINEER, ARCHITECT, LANDSCAPE ARCHITECT, OR LAND SURVEYOR, TO ALTER AN ITEM IN ANY WAY. IF AN ITEM BEARING THE STAMP OF A LICENSED PROFESSIONAL IS ALTERED, THE ALTERING ENGINEER, ARCHITECT, LANDSCAPE ARCHITECT, OR LAND SURVEYOR SHALL STAMP THE DOCUMENT AND INCLUDE THE NOTATION "ALTERED BY" FOLLOWED BY THEIR SIGNATURE, THE DATE OF SUCH ALTERATION, AND A SPECIFIC DESCRIPTION OF THE ALTERATION.

NEW YORK STATE OF OPPORTUNITY. Department of Transportation

PROJECT MANAGER S. S. VAIDYA
CHECK R. F. SCHALLER
DRAFTING C. L. CRITES
CHECK R. F. SCHALLER
DESIGN H. BELACHEW
JOB MANAGER R. F. SCHALLER
DESIGN SUPERVISOR S. S. VAIDYA
FILE NAME = 581361_CPH_HWY_PHASE_3C_WZTC_PLAN_SHEET1.dgn
DATE/TIME = 22-JUN-2021 12:33
USER = cartes

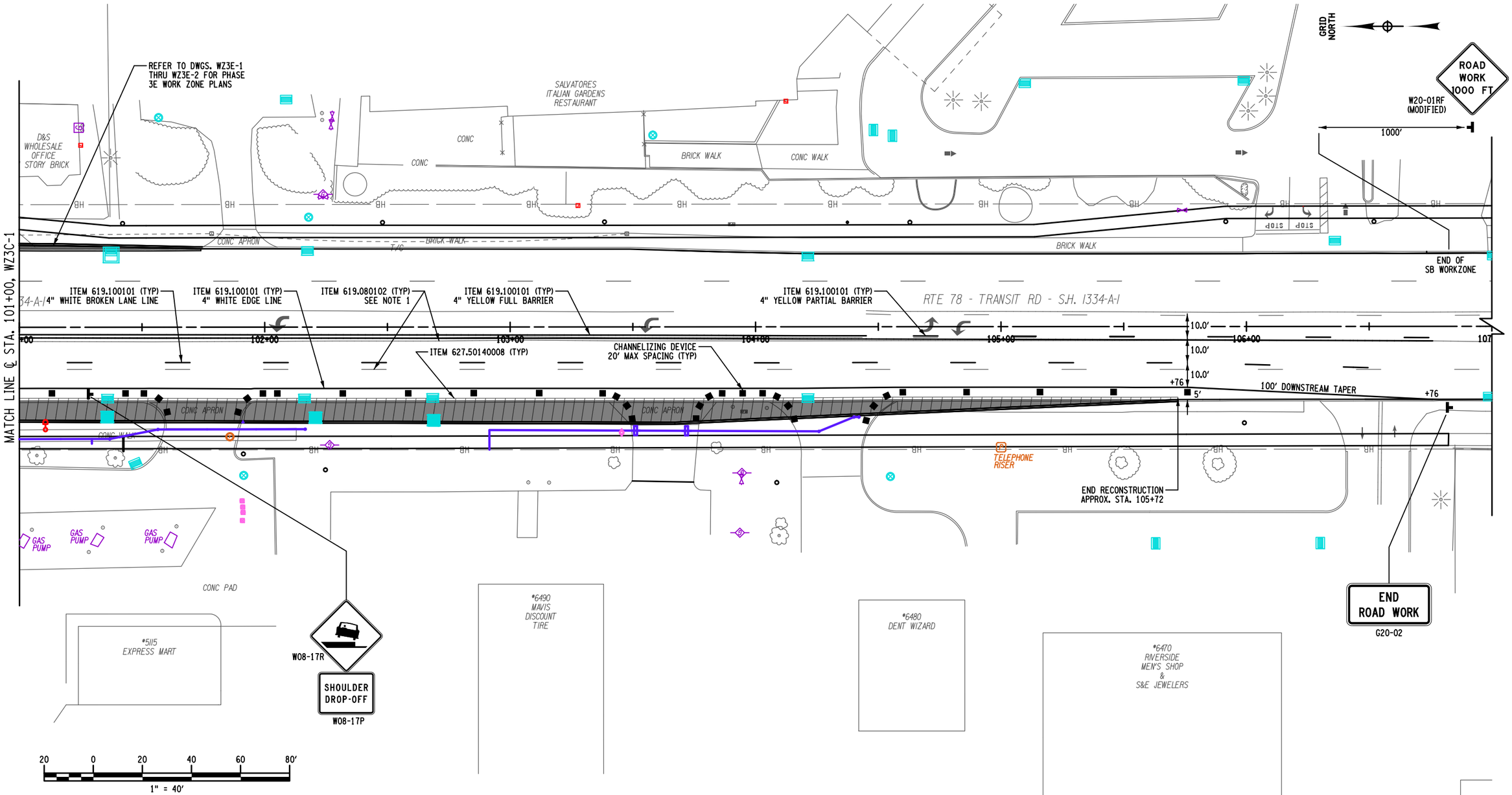

AFFIX SEAL: ON:	ALTERED BY: ON:
D264571 STATE OF NEW YORK ROBERT F. SCHALLER NO. 082465 LICENSED PROFESSIONAL ENGINEER	

ITEM SUMMARY:

ITEM 619.080102 - REMOVE PAVEMENT MARKINGS, STRIPES (EPOXY PAINT) (LF)
ITEM 619.100101 - INTERIM PAVEMENT MARKINGS, STRIPES (TRAFFIC PAINT) (LF)
ITEM 627.50140008 - CUTTING PAVEMENT (LF)

NOTES

1. REMOVE ALL CONFLICTING PAVEMENT MARKINGS.

AS-BUILT REVISIONS DESCRIPTION OF ALTERATIONS:	NY 78, TRANSIT ROAD, S.H. 1334A-1	PIN 5813.61 NY 78 UTILITY QUALITY LEVEL D	BRIDGES	CULVERTS	ALL DIMENSIONS IN ft UNLESS OTHERWISE NOTED	CONTRACT NUMBER D264571
	FRENCH ROAD TO WEHRLE DRIVE				WORK ZONE TRAFFIC CONTROL PHASE-3C / PLAN SHEET 2	DRAWING NO. WZ3C-2
	TOWNS OF CHEEKTOWAGA & LANCASTER					SHEET NO. 39
	VILLAGE OF DEPEW					
	COUNTY: ERIE REGION: 05					

IT IS A VIOLATION OF LAW FOR ANY PERSON, UNLESS THEY ARE ACTING UNDER THE DIRECTION OF A LICENSED PROFESSIONAL ENGINEER, ARCHITECT, LANDSCAPE ARCHITECT, OR LAND SURVEYOR, TO ALTER AN ITEM IN ANY WAY. IF AN ITEM BEARING THE STAMP OF A LICENSED PROFESSIONAL IS ALTERED, THE ALTERING ENGINEER, ARCHITECT, LANDSCAPE ARCHITECT, OR LAND SURVEYOR SHALL STAMP THE DOCUMENT AND INCLUDE THE NOTATION "ALTERED BY" FOLLOWED BY THEIR SIGNATURE, THE DATE OF SUCH ALTERATION, AND A SPECIFIC DESCRIPTION OF THE ALTERATION.

NEW YORK STATE OF OPPORTUNITY. Department of Transportation

PROJECT MANAGER S. S. VAIDYA
CHECK R. F. SCHALLER
DRAFTING C. L. CRITES
CHECK R. F. SCHALLER
DESIGN H. M. BELACHEW
JOB MANAGER R. F. SCHALLER
DESIGN SUPERVISOR S. S. VAIDYA

FILE NAME = 581361_CPH_HWY_PHASE_3C_WZTC_PLAN_SHEET2.dgn
DATE/TIME = 22-JUN-2021 12:33
USER = ccrites

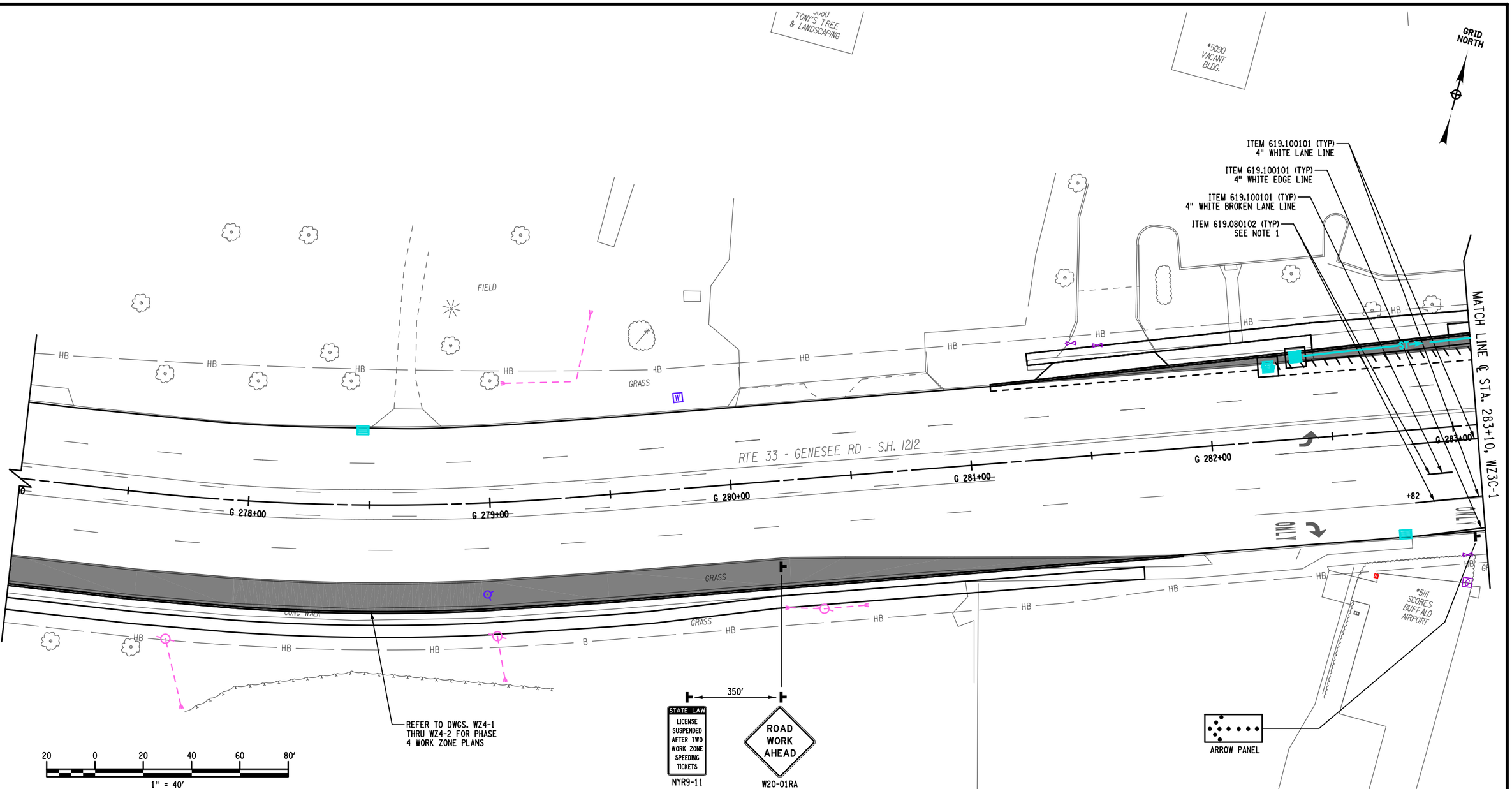

AFFIX SEAL: ON:	ALTERED BY: ON:
D264571 STATE OF NEW YORK ROBERT F. SCHALLER NO. 082465 LICENSED PROFESSIONAL ENGINEER	

ITEM SUMMARY:

ITEM 619.080102 - REMOVE PAVEMENT MARKINGS, STRIPES (EPOXY PAINT) (LF)
ITEM 619.100101 - INTERIM PAVEMENT MARKINGS, STRIPES (TRAFFIC PAINT) (LF)

NOTES

1. REMOVE ALL CONFLICTING PAVEMENT MARKINGS.

AS-BUILT REVISIONS DESCRIPTION OF ALTERATIONS:	NY 78, TRANSIT ROAD, S.H. 1334A-1	PIN 5813.61	BRIDGES	CULVERTS	ALL DIMENSIONS IN ft UNLESS OTHERWISE NOTED	CONTRACT NUMBER
	FRENCH ROAD TO WEHRLE DRIVE	NY 78			WORK ZONE TRAFFIC CONTROL PHASE-3C / PLAN SHEET 3	D264571
	TOWNS OF CHEEKTOWAGA & LANCASTER	UTILITY QUALITY LEVEL D				DRAWING NO. WZ3C-3
	VILLAGE OF DEPEW					SHEET NO. 40
	COUNTY: ERIE REGION: 05					

IT IS A VIOLATION OF LAW FOR ANY PERSON, UNLESS THEY ARE ACTING UNDER THE DIRECTION OF A LICENSED PROFESSIONAL ENGINEER, ARCHITECT, LANDSCAPE ARCHITECT, OR LAND SURVEYOR, TO ALTER AN ITEM IN ANY WAY. IF AN ITEM BEARING THE STAMP OF A LICENSED PROFESSIONAL IS ALTERED, THE ALTERING ENGINEER, ARCHITECT, LANDSCAPE ARCHITECT, OR LAND SURVEYOR SHALL STAMP THE DOCUMENT AND INCLUDE THE NOTATION "ALTERED BY" FOLLOWED BY THEIR SIGNATURE, THE DATE OF SUCH ALTERATION, AND A SPECIFIC DESCRIPTION OF THE ALTERATION.

NEW YORK STATE OF OPPORTUNITY. Department of Transportation

PROJECT MANAGER S. S. VAIDYA
CHECK R. F. SCHALLER
DRAFTING C. L. CRITES
CHECK R. F. SCHALLER
DESIGN H. M. BELACHEW
JOB MANAGER R. F. SCHALLER
DESIGN SUPERVISOR S. S. VAIDYA

FILE NAME = 581361_CPH_HWY_PHASE_3C_WZTC_PLAN_SHEET3.dgn
DATE/TIME = 22-JUN-2021 12:33
USER = ccrites

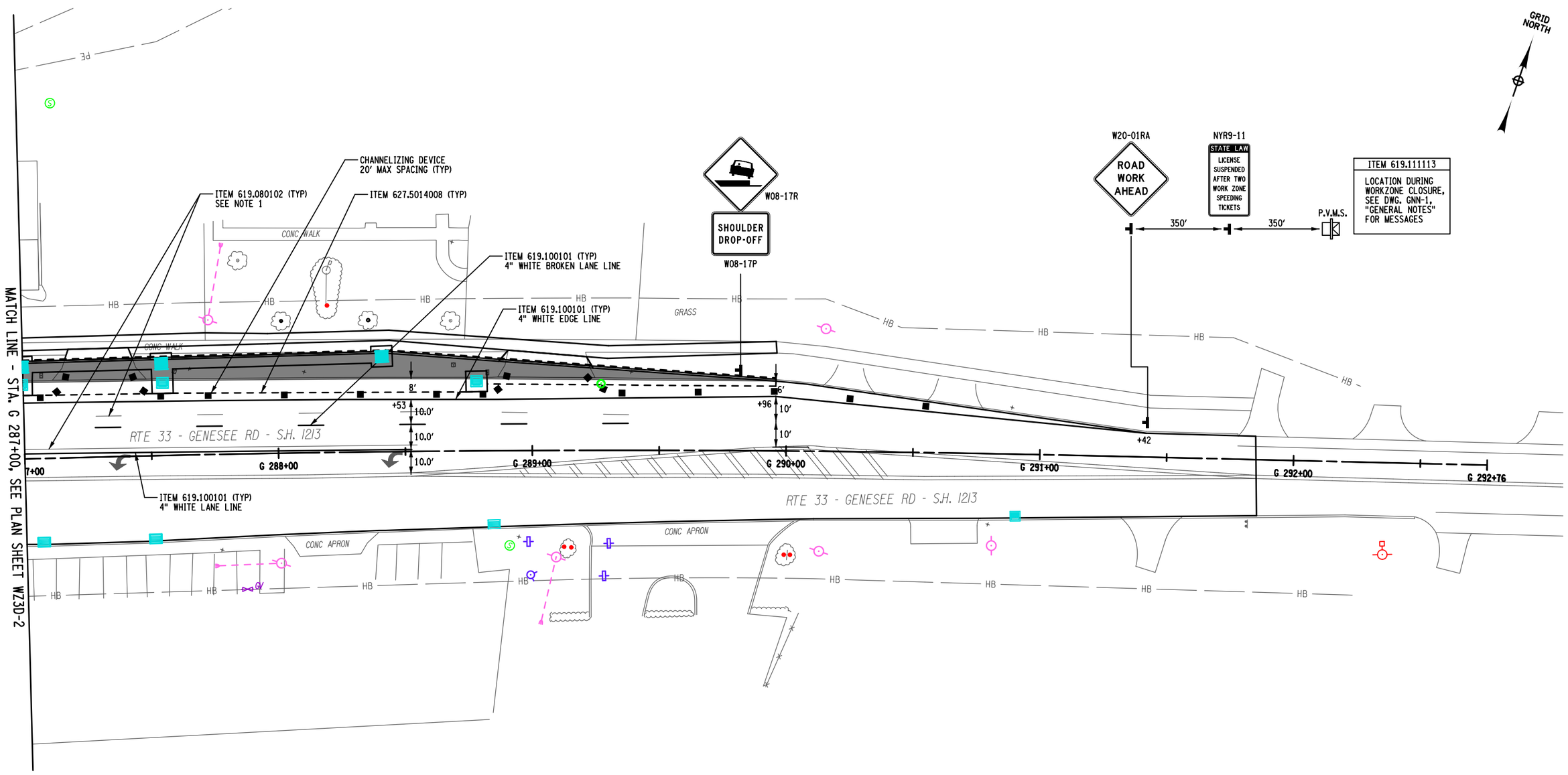

AFFIX SEAL: ON:	ALTERED BY: ON:
D264571 STATE OF NEW YORK ROBERT F. SCHALLER LICENSED PROFESSIONAL ENGINEER NO. 082465	

20 0 20 40 60 80'

1" = 40'

ITEM SUMMARY:

ITEM 619.080102 - REMOVE PAVEMENT MARKINGS, STRIPES (EPOXY PAINT) (LF)
ITEM 619.100101 - INTERIM PAVEMENT MARKINGS, STRIPES (TRAFFIC PAINT) (LF)
ITEM 619.111113 - (PVMS) STANDARD SIZE - LINE OR CHARACTER MATRIX (LED)
NO OPTIONAL EQUIPMENT SPECIFIED, CELLULAR COM. W/NTCIP COMP (EA)
ITEM 627.50140008 - CUTTING PAVEMENT (LF)

NOTES:

1. REMOVE ALL CONFLICTING PAVEMENT MARKINGS.

AS-BUILT REVISIONS DESCRIPTION OF ALTERATIONS:	NY 78, TRANSIT ROAD, S.H. 1334A-1	PIN 5813.61 NY 78	BRIDGES	CULVERTS	ALL DIMENSIONS IN ft UNLESS OTHERWISE NOTED	CONTRACT NUMBER D264571
	FRENCH ROAD TO WEHRLE DRIVE				WORK ZONE TRAFFIC CONTROL PHASE-3D / PLAN SHEET 1	DRAWING NO. WZ3D-1
	TOWNS OF CHEEKTOWAGA & LANCASTER					SHEET NO. 41
	VILLAGE OF DEPEW					
	COUNTY: ERIE REGION: 05					

IT IS A VIOLATION OF LAW FOR ANY PERSON, UNLESS THEY ARE ACTING UNDER THE DIRECTION OF A LICENSED PROFESSIONAL ENGINEER, ARCHITECT, LANDSCAPE ARCHITECT, OR LAND SURVEYOR, TO ALTER AN ITEM IN ANY WAY. IF AN ITEM BEARING THE STAMP OF A LICENSED PROFESSIONAL IS ALTERED, THE ALTERING ENGINEER, ARCHITECT, LANDSCAPE ARCHITECT, OR LAND SURVEYOR SHALL STAMP THE DOCUMENT AND INCLUDE THE NOTATION "ALTERED BY" FOLLOWED BY THEIR SIGNATURE, THE DATE OF SUCH ALTERATION, AND A SPECIFIC DESCRIPTION OF THE ALTERATION.

NEW YORK STATE OF OPPORTUNITY. Department of Transportation

DESIGN SUPERVISOR S. S. VAIDYA JOB MANAGER R. F. SCHALLER DESIGN P. M. LAUGEMAN CHECK R. F. SCHALLER DRAFTING P. M. LAUGEMAN CHECK R. F. SCHALLER PROJECT MANAGER S. S. VAIDYA

FILE NAME = 581361_CPH_HWY_PHASE_3D_WZTC_PLAN_SHEET1.dgn
DATE/TIME = 22-JUN-2021 12:33
USER = corites

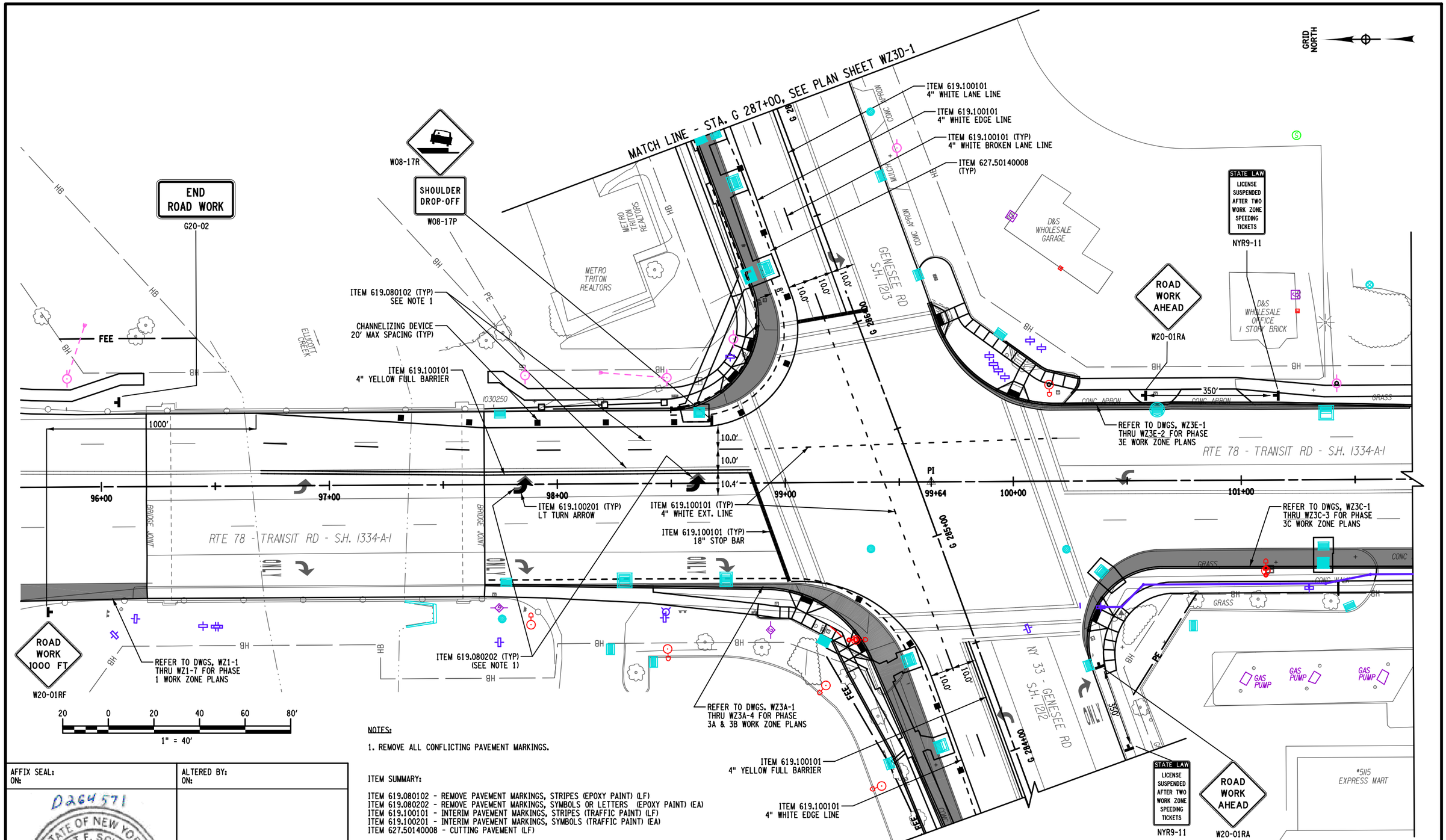

NOTES:

1. REMOVE ALL CONFLICTING PAVEMENT MARKINGS.

ITEM SUMMARY:

ITEM 619.080102 - REMOVE PAVEMENT MARKINGS, STRIPES (EPOXY PAINT) (LF)
ITEM 619.080202 - REMOVE PAVEMENT MARKINGS, SYMBOLS OR LETTERS (EPOXY PAINT) (EA)
ITEM 619.100101 - INTERIM PAVEMENT MARKINGS, STRIPES (TRAFFIC PAINT) (LF)
ITEM 619.100201 - INTERIM PAVEMENT MARKINGS, SYMBOLS (TRAFFIC PAINT) (EA)
ITEM 627.50140008 - CUTTING PAVEMENT (LF)

AFFIX SEAL:
ON:

D264571
STATE OF NEW YORK
ROBERT F. SCHALLER
NO. 082465
LICENSED PROFESSIONAL ENGINEER

ALTERED BY:
ON:

AS-BUILT REVISIONS
DESCRIPTION OF ALTERATIONS:

NY 78, TRANSIT ROAD, S.H. 1334A-1	PIN 5813.61	BRIDGES	CULVERTS	ALL DIMENSIONS IN ft UNLESS OTHERWISE NOTED	CONTRACT NUMBER
FRENCH ROAD TO WEHRLE DRIVE	NY 78			WORK ZONE TRAFFIC CONTROL	D264571
TOWNS OF CHEEKTOWAGA & LANCASTER				PHASE-3D / PLAN SHEET 2	DRAWING NO. WZ3D-2
VILLAGE OF DEPEW					SHEET NO. 42
COUNTY: ERIE REGION: 05					

IT IS A VIOLATION OF LAW FOR ANY PERSON, UNLESS THEY ARE ACTING UNDER THE DIRECTION OF A LICENSED PROFESSIONAL ENGINEER, ARCHITECT, LANDSCAPE ARCHITECT, OR LAND SURVEYOR, TO ALTER AN ITEM IN ANY WAY. IF AN ITEM BEARING THE STAMP OF A LICENSED PROFESSIONAL IS ALTERED, THE ALTERING ENGINEER, ARCHITECT, LANDSCAPE ARCHITECT, OR LAND SURVEYOR SHALL STAMP THE DOCUMENT AND INCLUDE THE NOTATION "ALTERED BY" FOLLOWED BY THEIR SIGNATURE, THE DATE OF SUCH ALTERATION, AND A SPECIFIC DESCRIPTION OF THE ALTERATION.

NEW YORK STATE OF OPPORTUNITY. Department of Transportation

DESIGN SUPERVISOR S. S. VAIDYA
JOB MANAGER R. F. SCHALLER
DESIGN P. M. LAUGEMAN
CHECK R. F. SCHALLER
DRAFTING P. M. LAUGEMAN
CHECK R. F. SCHALLER
PROJECT MANAGER S. S. VAIDYA

FILE NAME = 581361_CPH_HWY_PHASE_3D_WZTC_PLAN_SHEET2.dgn
DATE/TIME = 22-JUN-2021 12:33
USER = corites

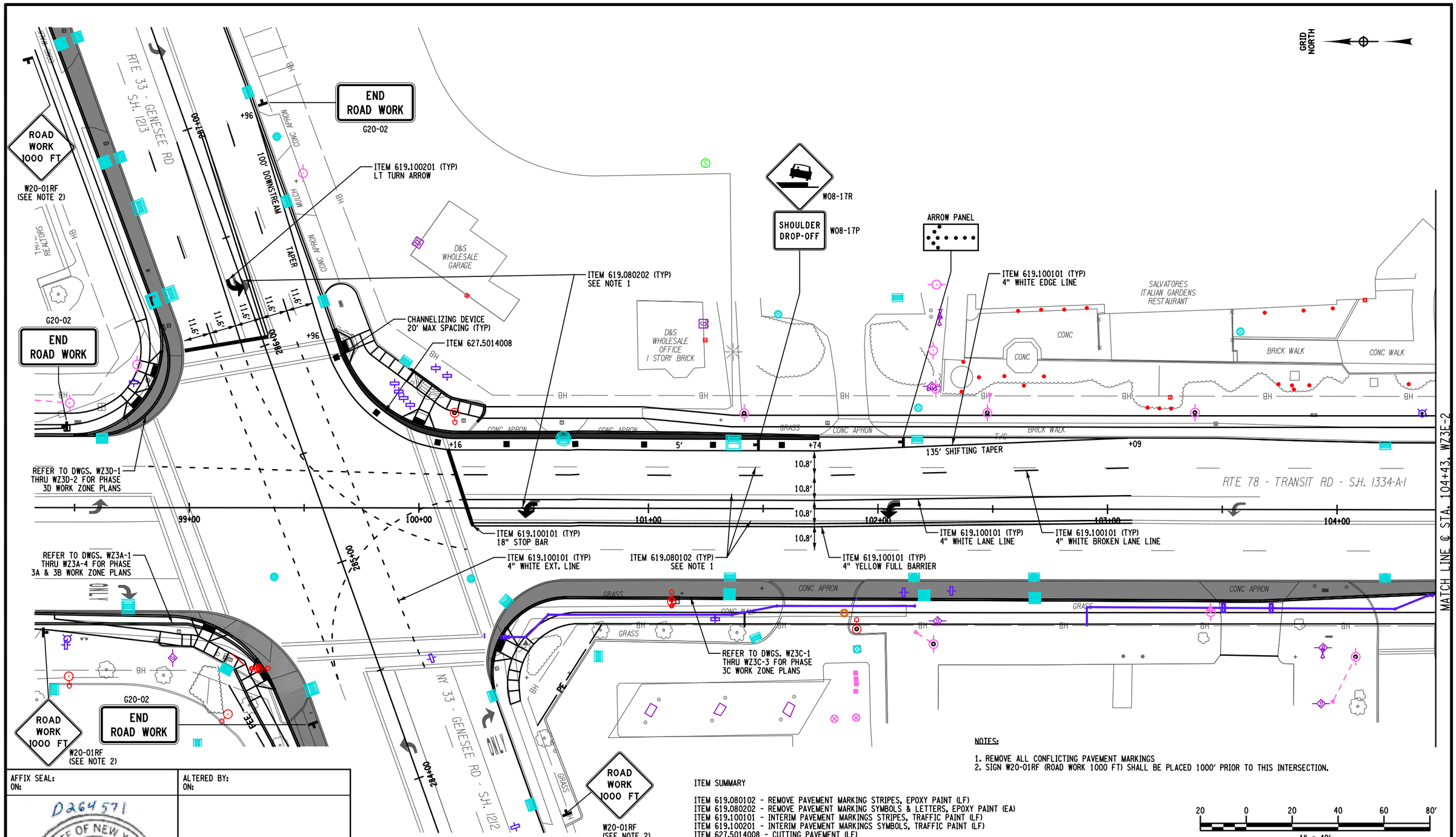

NOTES:

1. REMOVE ALL CONFLICTING PAVEMENT MARKINGS
2. SIGN W20-01RF (ROAD WORK 1000 FT) SHALL BE PLACED 1000' PRIOR TO THIS INTERSECTION.

ITEM SUMMARY

ITEM 619.080102 - REMOVE PAVEMENT MARKING STRIPES, EPOXY PAINT (LF)
ITEM 619.080202 - REMOVE PAVEMENT MARKING SYMBOLS & LETTERS, EPOXY PAINT (EA)
ITEM 619.100101 - INTERIM PAVEMENT MARKINGS STRIPES, TRAFFIC PAINT (LF)
ITEM 619.100201 - INTERIM PAVEMENT MARKINGS SYMBOLS, TRAFFIC PAINT (LF)
ITEM 627.5014008 - CUTTING PAVEMENT (LF)

20 0 20 40 60 80'
1" = 40'

AFFIX SEAL:
ON:

ALTERED BY:
ON:

D264571
STATE OF NEW YORK
ROBERT F. SCHALLER
NO. 082465
LICENSED PROFESSIONAL ENGINEER

AS-BUILT REVISIONS
DESCRIPTION OF ALTERATIONS:

NY 78, TRANSIT ROAD, S.H. 1334A-1
FRENCH ROAD TO WEHRLE DRIVE
TOWNS OF CHEEKTOWAGA & LANCASTER
VILLAGE OF DEPEW
COUNTY: ERIE REGION: 05

PIN 5813.61
NY 78
UTILITY QUALITY LEVEL D

BRIDGES

CULVERTS

ALL DIMENSIONS IN ft UNLESS OTHERWISE NOTED

WORK ZONE TRAFFIC CONTROL
PHASE-3E / PLAN SHEET 1

CONTRACT NUMBER
D264571

DRAWING NO. WZ3E-1
SHEET NO. 43

IT IS A VIOLATION OF LAW FOR ANY PERSON, UNLESS THEY ARE ACTING UNDER THE DIRECTION OF A LICENSED PROFESSIONAL ENGINEER, ARCHITECT, LANDSCAPE ARCHITECT, OR LAND SURVEYOR, TO ALTER AN ITEM IN ANY WAY. IF AN ITEM BEARING THE STAMP OF A LICENSED PROFESSIONAL IS ALTERED, THE ALTERING ENGINEER, ARCHITECT, LANDSCAPE ARCHITECT, OR LAND SURVEYOR SHALL STAMP THE DOCUMENT AND INCLUDE THE NOTATION "ALTERED BY" FOLLOWED BY THEIR SIGNATURE, THE DATE OF SUCH ALTERATION, AND A SPECIFIC DESCRIPTION OF THE ALTERATION.

NEW YORK STATE OF OPPORTUNITY. Department of Transportation

PROJECT MANAGER S. S. VAIDYA
CHECK C. L. CRITES
DRAFTING H. M. BELACHEW
CHECK R. F. SCHALLER
DESIGN H. M. BELACHEW
JOB MANAGER R. F. SCHALLER
DESIGN SUPERVISOR S. S. VAIDYA

FILE NAME = 581361_CPH_HWY_PHASE_3E_WZTC_PLAN_SHEET1.dgn
DATE/TIME = 22-JUN-2021 12:34
USER = crites

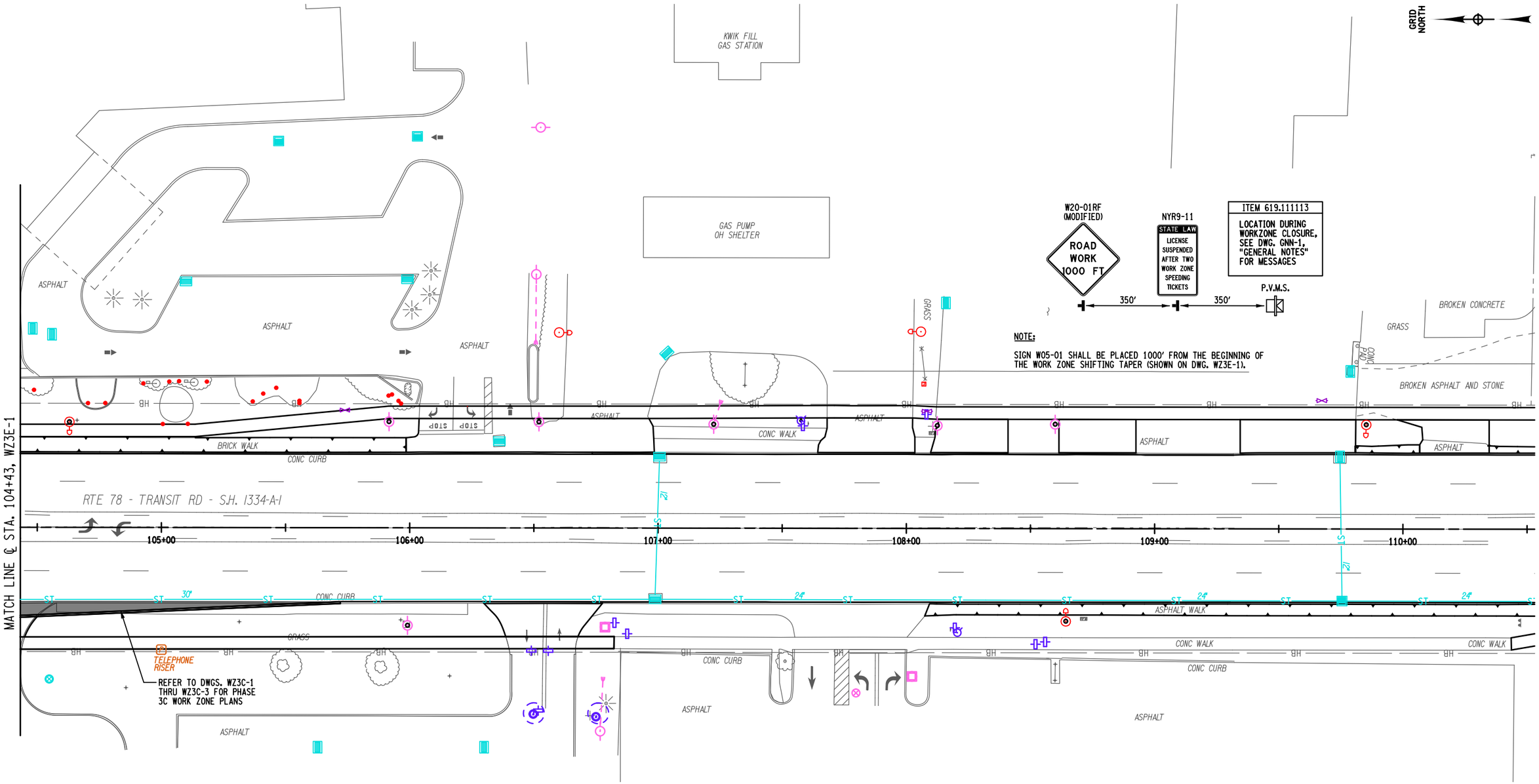

20 0 20 40 60 80'

1" = 40'

ITEM SUMMARY

ITEM 619.111113 - (PVMS) STANDARD SIZE - LINE OR CHARACTER MATRIX (LED)
NO OPTIONAL EQUIPMENT SPECIFIED, CELLULAR COM. W/NTCIP COMP (EA)

AFFIX SEAL: ON:	ALTERED BY: ON:
D264571 STATE OF NEW YORK ROBERT F. SCHALLER NO. 082465 LICENSED PROFESSIONAL ENGINEER	

AS-BUILT REVISIONS
DESCRIPTION OF ALTERATIONS:

NY 78, TRANSIT ROAD, S.H. 1334A-1	PIN 5813.61	BRIDGES	CULVERTS	ALL DIMENSIONS IN ft UNLESS OTHERWISE NOTED	CONTRACT NUMBER D264571
FRENCH ROAD TO WEHRLE DRIVE	NY 78			WORK ZONE TRAFFIC CONTROL PHASE-3E / PLAN SHEET 2	DRAWING NO. WZ3E-2
TOWNS OF CHEEKTOWAGA & LANCASTER	UTILITY QUALITY LEVEL D				SHEET NO. 44
VILLAGE OF DEPEW					
COUNTY: ERIE REGION: 05					

IT IS A VIOLATION OF LAW FOR ANY PERSON, UNLESS THEY ARE ACTING UNDER THE DIRECTION OF A LICENSED PROFESSIONAL ENGINEER, ARCHITECT, LANDSCAPE ARCHITECT, OR LAND SURVEYOR, TO ALTER AN ITEM IN ANY WAY. IF AN ITEM BEARING THE STAMP OF A LICENSED PROFESSIONAL IS ALTERED, THE ALTERING ENGINEER, ARCHITECT, LANDSCAPE ARCHITECT, OR LAND SURVEYOR SHALL STAMP THE DOCUMENT AND INCLUDE THE NOTATION "ALTERED BY" FOLLOWED BY THEIR SIGNATURE, THE DATE OF SUCH ALTERATION, AND A SPECIFIC DESCRIPTION OF THE ALTERATION.

NEW YORK STATE OF OPPORTUNITY. Department of Transportation

PROJECT MANAGER S. S. VAIDYA
CHECK C. L. CRITES
DRAFTING H. M. BELACHEW
CHECK R. F. SCHALLER
DESIGN H. M. BELACHEW
JOB MANAGER R. F. SCHALLER
DESIGN SUPERVISOR S. S. VAIDYA

FILE NAME = 581361_CPH_HWY_PHASE_3E_WZTC_PLAN_SHEET2.dgn
DATE/TIME = 22-JUN-2021 12:34
USER = ccrites

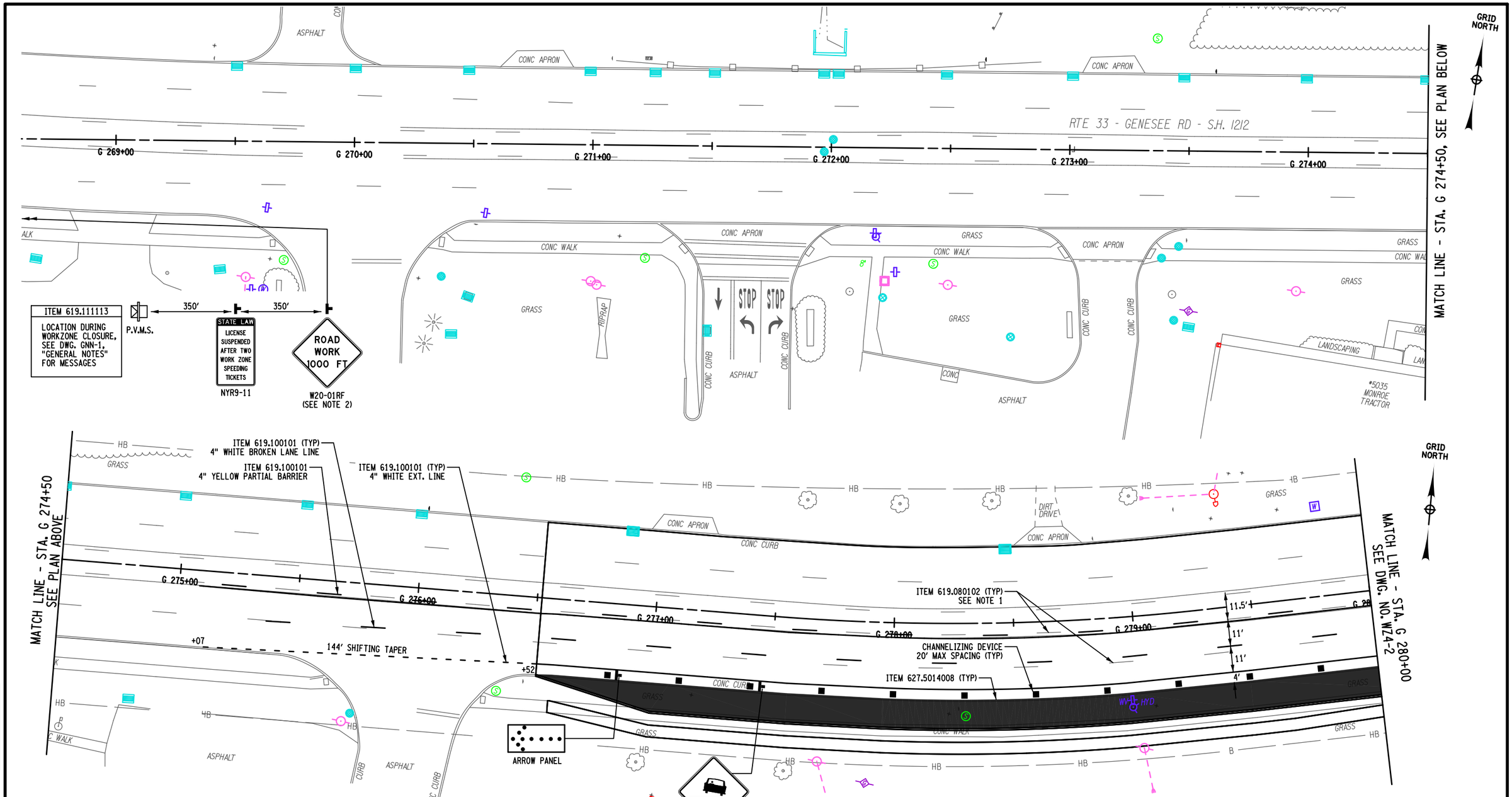

AFFIX SEAL: ON:	ALTERED BY: ON:
D264571 STATE OF NEW YORK ROBERT F. SCHALLER LICENSED PROFESSIONAL ENGINEER NO. 082465	

ITEM SUMMARY:

ITEM 619.080102 - REMOVE PAVEMENT MARKINGS, STRIPES (EPOXY PAINT) (LF)
ITEM 619.100101 - INTERIM PAVEMENT MARKINGS, STRIPES (TRAFFIC PAINT) (LF)
ITEM 619.111113 - (PVMS) STANDARD SIZE - LINE OR CHARACTER MATRIX (LED) NO OPTIONAL EQUIPMENT SPECIFIED, CELLULAR COM. W/NTCIP COMP (EA)
ITEM 627.50140008 - CUTTING PAVEMENT (LF)

NOTES:

1. REMOVE ALL CONFLICTING PAVEMENT MARKINGS.
2. SIGN W20-01RF (ROAD WORK 1000 FT) SHALL BE PLACED 1000' PRIOR TO THE 144' SHIFTING TAPER..

AS-BUILT REVISIONS DESCRIPTION OF ALTERATIONS:	NY 78, TRANSIT ROAD, S.H. 1334A-1	PIN 5813.61 NY 78	BRIDGES	CULVERTS	ALL DIMENSIONS IN ft UNLESS OTHERWISE NOTED	CONTRACT NUMBER D264571
	FRENCH ROAD TO WEHRLE DRIVE				WORK ZONE TRAFFIC CONTROL PHASE-4 / PLAN SHEET 1	DRAWING NO. WZ4-1
	TOWNS OF CHEEKTOWAGA & LANCASTER					SHEET NO. 45
	VILLAGE OF DEPEW					
	COUNTY: ERIE REGION: 05					

IT IS A VIOLATION OF LAW FOR ANY PERSON, UNLESS THEY ARE ACTING UNDER THE DIRECTION OF A LICENSED PROFESSIONAL ENGINEER, ARCHITECT, LANDSCAPE ARCHITECT, OR LAND SURVEYOR, TO ALTER AN ITEM IN ANY WAY. IF AN ITEM BEARING THE STAMP OF A LICENSED PROFESSIONAL IS ALTERED, THE ALTERING ENGINEER, ARCHITECT, LANDSCAPE ARCHITECT, OR LAND SURVEYOR SHALL STAMP THE DOCUMENT AND INCLUDE THE NOTATION "ALTERED BY" FOLLOWED BY THEIR SIGNATURE, THE DATE OF SUCH ALTERATION, AND A SPECIFIC DESCRIPTION OF THE ALTERATION.

NEW YORK STATE OF OPPORTUNITY. Department of Transportation

DESIGN SUPERVISOR S. S. VAIDYA JOB MANAGER R. F. SCHALLER DESIGN P. M. LAUGEMAN CHECK R. F. SCHALLER DRAFTING P. M. LAUGEMAN CHECK R. F. SCHALLER PROJECT MANAGER S. S. VAIDYA

FILE NAME = 581361_CPH_HWY_PHASE_4_WZTC_PLAN_SHEET1.dgn
DATE/TIME = 22-JUN-2021 12:34
USER = corites

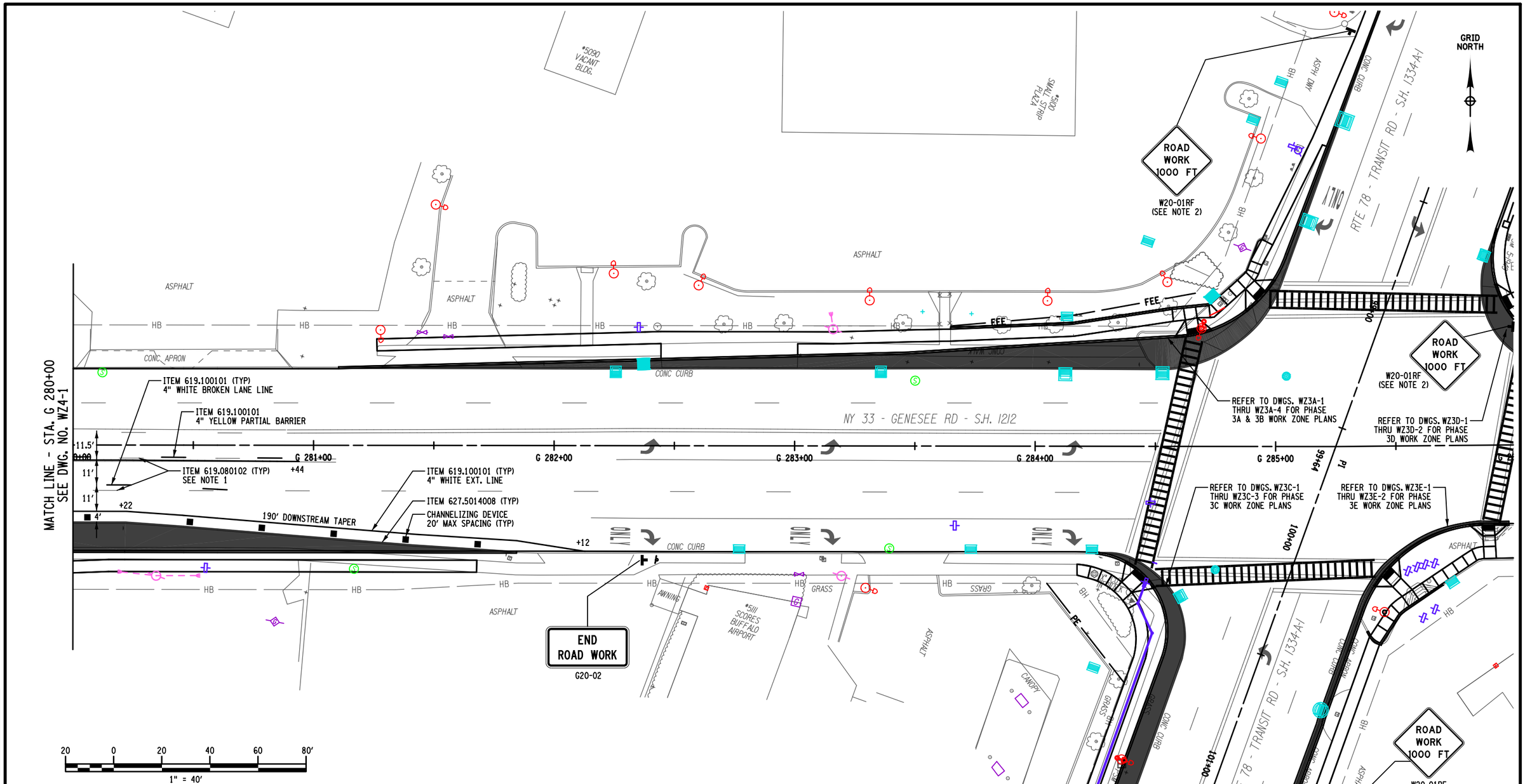

ITEM SUMMARY:

ITEM 619.080102 - REMOVE PAVEMENT MARKINGS, STRIPES (EPOXY PAINT) (LF)
ITEM 619.100101 - INTERIM PAVEMENT MARKINGS, STRIPES (TRAFFIC PAINT) (LF)
ITEM 627.50140008 - CUTTING PAVEMENT (LF)

NOTES:

1. REMOVE ALL CONFLICTING PAVEMENT MARKINGS.
2. SIGN W20-01RF (ROAD WORK 1000 FT) SHALL BE PLACED 1000' PRIOR TO THIS INTERSECTION.

AFFIX SEAL:
ON:

D264571
STATE OF NEW YORK
ROBERT F. SCHALLER
NO. 082465
LICENSED PROFESSIONAL ENGINEER

ALTERED BY:
ON:

AS-BUILT REVISIONS
DESCRIPTION OF ALTERATIONS:

NY 78, TRANSIT ROAD, S.H. 1334A-1	PIN 5813.61	BRIDGES	CULVERTS	ALL DIMENSIONS IN ft UNLESS OTHERWISE NOTED	CONTRACT NUMBER
FRENCH ROAD TO WEHRLE DRIVE	NY 78			WORK ZONE TRAFFIC CONTROL	D264571
TOWNS OF CHEEKTOWAGA & LANCASTER				PHASE-4 / PLAN SHEET 2	DRAWING NO. WZ4-2
VILLAGE OF DEPEW					SHEET NO. 46
COUNTY: ERIE REGION: 05					

IT IS A VIOLATION OF LAW FOR ANY PERSON, UNLESS THEY ARE ACTING UNDER THE DIRECTION OF A LICENSED PROFESSIONAL ENGINEER, ARCHITECT, LANDSCAPE ARCHITECT, OR LAND SURVEYOR, TO ALTER AN ITEM IN ANY WAY. IF AN ITEM BEARING THE STAMP OF A LICENSED PROFESSIONAL IS ALTERED, THE ALTERING ENGINEER, ARCHITECT, LANDSCAPE ARCHITECT, OR LAND SURVEYOR SHALL STAMP THE DOCUMENT AND INCLUDE THE NOTATION "ALTERED BY" FOLLOWED BY THEIR SIGNATURE, THE DATE OF SUCH ALTERATION, AND A SPECIFIC DESCRIPTION OF THE ALTERATION.

NEW YORK STATE OF OPPORTUNITY. Department of Transportation

DESIGN SUPERVISOR S. S. VAIDYA | JOB MANAGER R. F. SCHALLER | DESIGN P. M. LAUGEMAN | CHECK R. F. SCHALLER | DRAFTING P. M. LAUGEMAN | CHECK R. F. SCHALLER | PROJECT MANAGER S. S. VAIDYA

FILE NAME = 581361_CPH_HWY_PHASE_4_WZTC_PLAN_SHEET2.dgn
DATE/TIME = 22-JUN-2021 12:34
USER = cortes

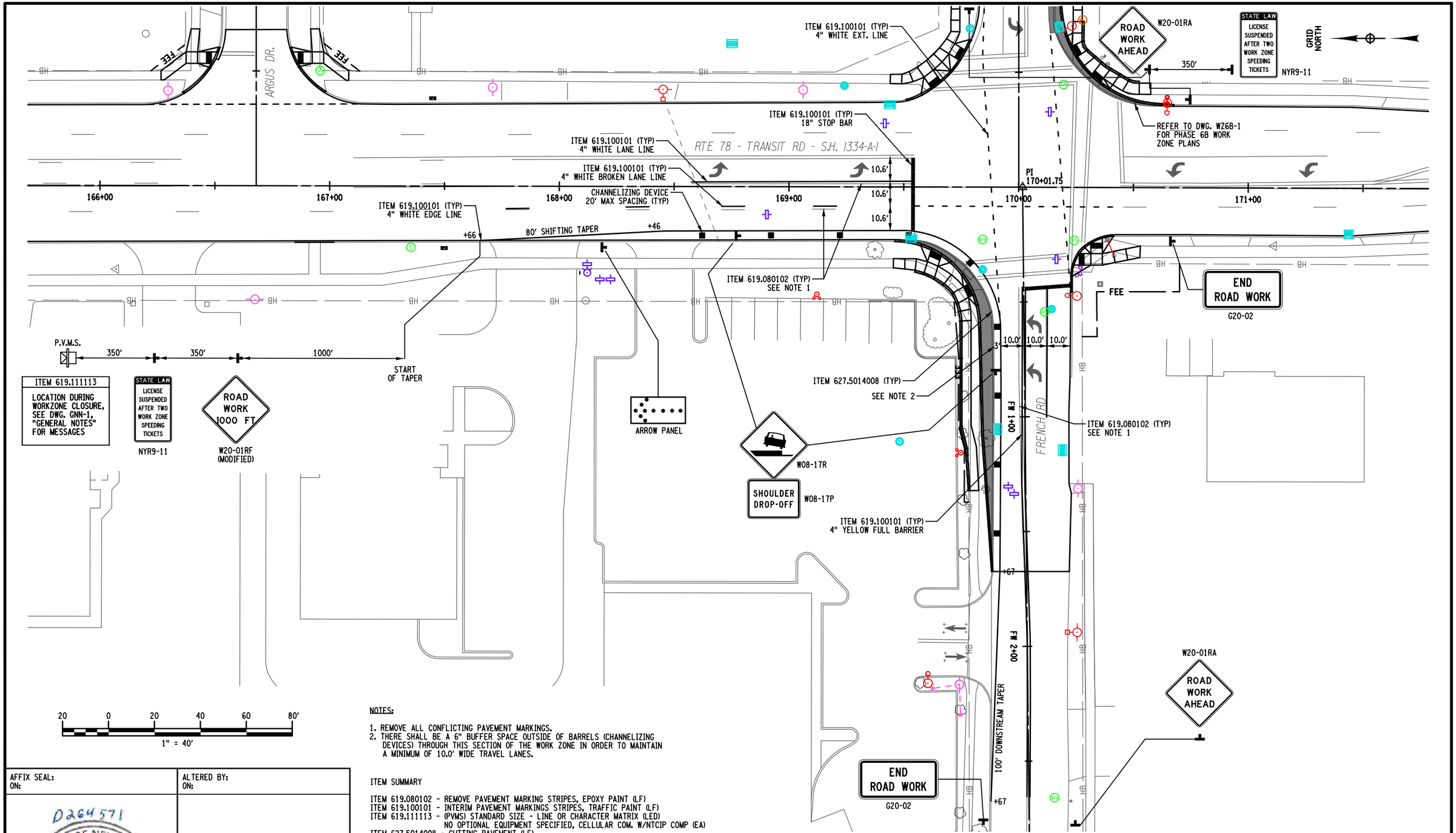

NOTES:

1. REMOVE ALL CONFLICTING PAVEMENT MARKINGS.
2. THERE SHALL BE A 6" BUFFER SPACE OUTSIDE OF BARRELS (CHANNELIZING DEVICES) THROUGH THIS SECTION OF THE WORK ZONE IN ORDER TO MAINTAIN A MINIMUM OF 10.0' WIDE TRAVEL LANES.

ITEM SUMMARY

ITEM 619.080102 - REMOVE PAVEMENT MARKING STRIPES, EPOXY PAINT (LF)
ITEM 619.100101 - INTERIM PAVEMENT MARKINGS STRIPES, TRAFFIC PAINT (LF)
ITEM 619.111113 - (PVMS) STANDARD SIZE - LINE OR CHARACTER MATRIX (LED) NO OPTIONAL EQUIPMENT SPECIFIED, CELLULAR COM. W/NTCIP COMP (EA)
ITEM 627.5014008 - CUTTING PAVEMENT (LF)

AFFIX SEAL:
ON:

ALTERED BY:
ON:

D264571
STATE OF NEW YORK
ROBERT F. SCHALLER
NO. 082465
LICENSED PROFESSIONAL ENGINEER

AS-BUILT REVISIONS
DESCRIPTION OF ALTERATIONS:

NY 78, TRANSIT ROAD, S.H. 1334A-1
FRENCH ROAD TO WEHRLE DRIVE
TOWNS OF CHEEKTOWAGA & LANCASTER
VILLAGE OF DEPEW
COUNTY: ERIE REGION: 05

PIN 5813.61
NY 78
UTILITY QUALITY LEVEL D

BRIDGES

CULVERTS

ALL DIMENSIONS IN ft UNLESS OTHERWISE NOTED

WORK ZONE TRAFFIC CONTROL
PHASE-6A / PLAN SHEET 1

CONTRACT NUMBER
D264571

DRAWING NO. WZ6A
SHEET NO. 47

IT IS A VIOLATION OF LAW FOR ANY PERSON, UNLESS THEY ARE ACTING UNDER THE DIRECTION OF A LICENSED PROFESSIONAL ENGINEER, ARCHITECT, LANDSCAPE ARCHITECT, OR LAND SURVEYOR, TO ALTER AN ITEM IN ANY WAY. IF AN ITEM BEARING THE STAMP OF A LICENSED PROFESSIONAL IS ALTERED, THE ALTERING ENGINEER, ARCHITECT, LANDSCAPE ARCHITECT, OR LAND SURVEYOR SHALL STAMP THE DOCUMENT AND INCLUDE THE NOTATION "ALTERED BY" FOLLOWED BY THEIR SIGNATURE, THE DATE OF SUCH ALTERATION, AND A SPECIFIC DESCRIPTION OF THE ALTERATION.

NEW YORK STATE OF OPPORTUNITY. Department of Transportation

PROJECT MANAGER S. S. VAIDYA
CHECK C. L. CRITES
DRAFTING H. M. BELACHEW
CHECK R. F. SCHALLER
DESIGN H. M. BELACHEW
JOB MANAGER R. F. SCHALLER
DESIGN SUPERVISOR S. S. VAIDYA

FILE NAME = 581361_CPH_HWY_PHASE_6A_WZTC_PLAN_SHEET1.dgn
DATE/TIME = 22-JUN-2021 12:34
USER = cortes

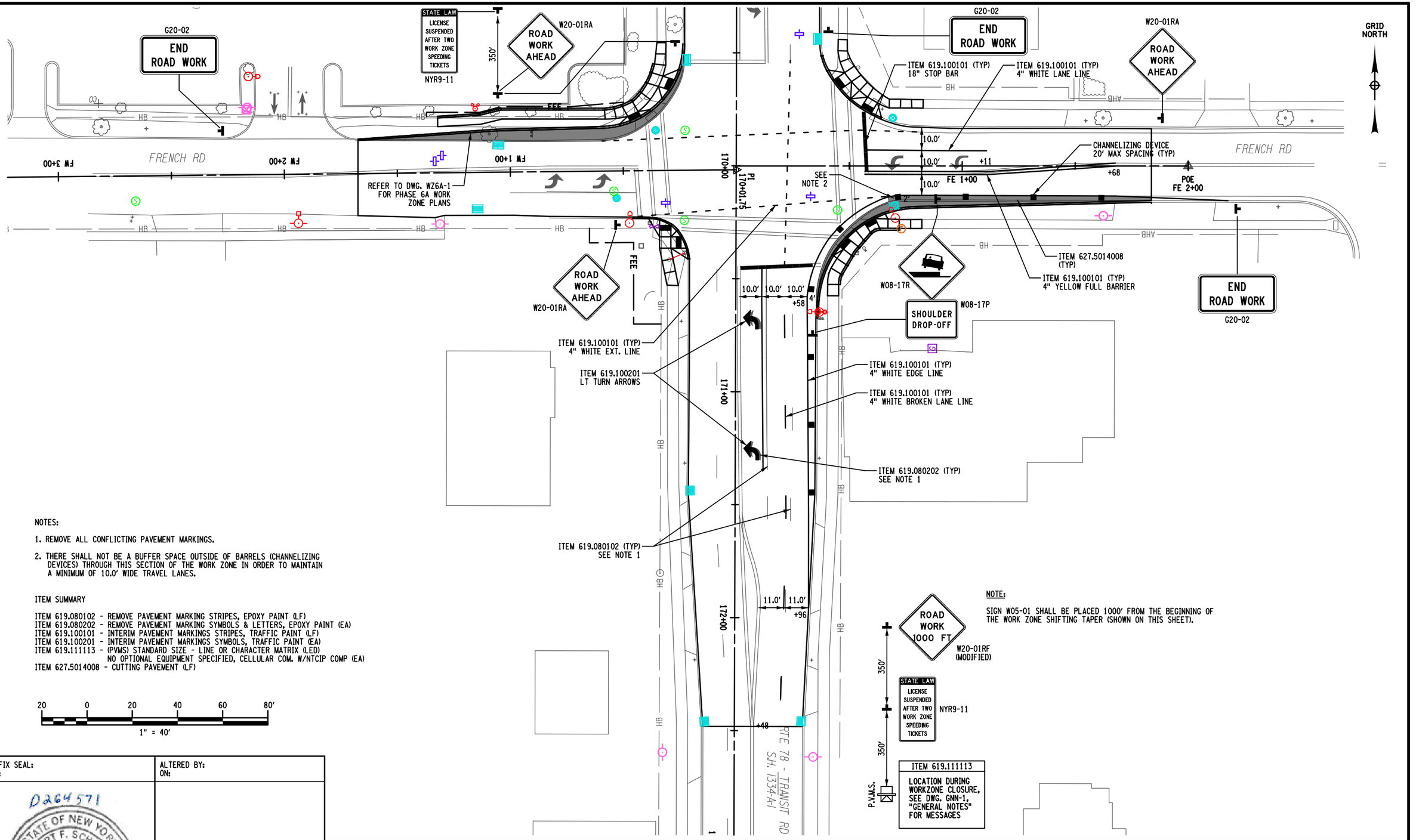

NOTES:

1. REMOVE ALL CONFLICTING PAVEMENT MARKINGS.

2. THERE SHALL NOT BE A BUFFER SPACE OUTSIDE OF BARRELS (CHANNELIZING DEVICES) THROUGH THIS SECTION OF THE WORK ZONE IN ORDER TO MAINTAIN A MINIMUM OF 10.0' WIDE TRAVEL LANES.

ITEM SUMMARY

ITEM 619.080102 - REMOVE PAVEMENT MARKING STRIPES, EPOXY PAINT (LF)
ITEM 619.080202 - REMOVE PAVEMENT MARKING SYMBOLS & LETTERS, EPOXY PAINT (EA)
ITEM 619.100101 - INTERIM PAVEMENT MARKINGS STRIPES, TRAFFIC PAINT (LF)
ITEM 619.100201 - INTERIM PAVEMENT MARKINGS SYMBOLS, TRAFFIC PAINT (EA)
ITEM 619.111113 - (PVMS) STANDARD SIZE - LINE OR CHARACTER MATRIX (LED)
NO OPTIONAL EQUIPMENT SPECIFIED, CELLULAR COM. W/NTCIP COMP (EA)
ITEM 627.5014008 - CUTTING PAVEMENT (LF)

20 0 20 40 60 80'
1" = 40'

NOTE:

SIGN W05-01 SHALL BE PLACED 1000' FROM THE BEGINNING OF THE WORK ZONE SHIFTING TAPER (SHOWN ON THIS SHEET).

AFFIX SEAL:
ON:

D264571
STATE OF NEW YORK
ROBERT F. SCHALLER
LICENSED PROFESSIONAL ENGINEER
NO. 082465

ALTERED BY:
ON:

AS-BUILT REVISIONS
DESCRIPTION OF ALTERATIONS:

NY 78, TRANSIT ROAD, S.H. 1334A-1
FRENCH ROAD TO WEHRLE DRIVE
TOWNS OF CHEEKTOWAGA & LANCASTER
VILLAGE OF DEPEW
COUNTY: ERIE REGION: 05

PIN 5813.61
NY 78
UTILITY QUALITY LEVEL D

BRIDGES

CULVERTS

ALL DIMENSIONS IN ft UNLESS OTHERWISE NOTED

WORK ZONE TRAFFIC CONTROL
PHASE-6B / PLAN SHEET

CONTRACT NUMBER
D264571

DRAWING NO. WZ6B
SHEET NO. 48

IT IS A VIOLATION OF LAW FOR ANY PERSON, UNLESS THEY ARE ACTING UNDER THE DIRECTION OF A LICENSED PROFESSIONAL ENGINEER, ARCHITECT, LANDSCAPE ARCHITECT, OR LAND SURVEYOR, TO ALTER AN ITEM IN ANY WAY. IF AN ITEM BEARING THE STAMP OF A LICENSED PROFESSIONAL IS ALTERED, THE ALTERING ENGINEER, ARCHITECT, LANDSCAPE ARCHITECT, OR LAND SURVEYOR SHALL STAMP THE DOCUMENT AND INCLUDE THE NOTATION "ALTERED BY" FOLLOWED BY THEIR SIGNATURE, THE DATE OF SUCH ALTERATION, AND A SPECIFIC DESCRIPTION OF THE ALTERATION.

NEW YORK STATE OF OPPORTUNITY. Department of Transportation

DESIGN SUPERVISOR S. S. VAIDYA JOB MANAGER R. F. SCHALLER DESIGN H. M. BELACHEW CHECK R. F. SCHALLER DRAFTING H. M. BELACHEW CHECK C. L. CRITES PROJECT MANAGER S. S. VAIDYA

FILE NAME = 581361_CPH_HWY_PHASE_6B_WZTC_PLAN_SHEET_1.dgn
DATE/TIME = 22-JUN-2021 12:34
USER = cc rites

COMPONENTS OF A WORK ZONE TRAFFIC CONTROL ZONE

with out Barrier Vehicle

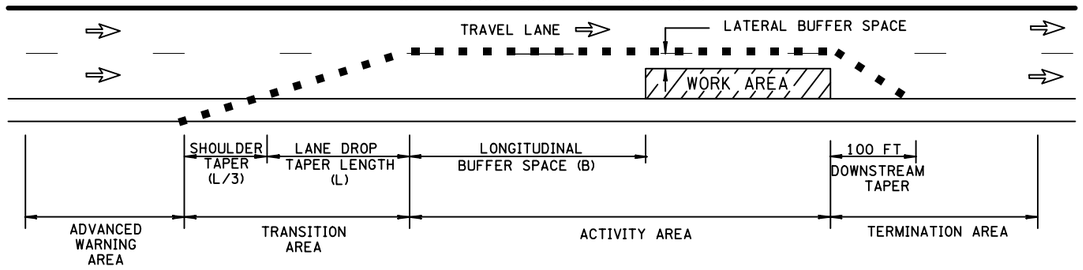

with Barrier Vehicle

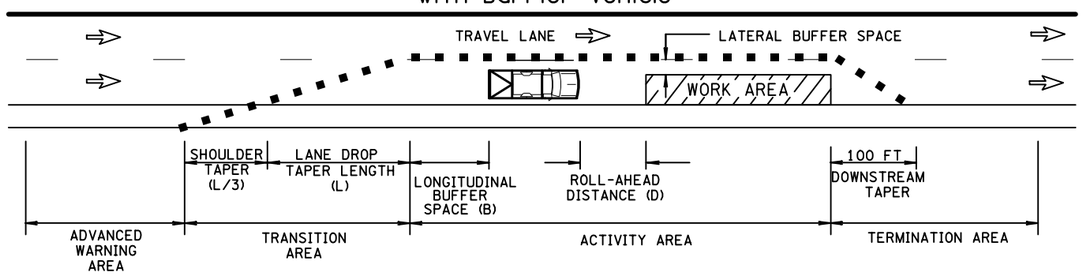

ADVANCED WARNING AREA: TELLS TRAFFIC WHAT TO EXPECT AHEAD	TRAVEL LANE: ALLOWS TRAFFIC TO PASS THROUGH THE ACTIVITY AREA
TRANSITION AREA: MOVES TRAFFIC OUT OF ITS NORMAL PATH	LATERAL BUFFER SPACE: USE WHEN POSSIBLE TO SEPARATE THE TRAFFIC SPACE FROM THE WORK SPACE OR HAZARDOUS AREA SUCH AS AN EXCAVATION OR PAVEMENT DROP-OFF
ACTIVITY AREA: WHERE WORK TAKES PLACE	TERMINATION AREA: LETS TRAFFIC RESUME NORMAL DRIVING
LONGITUDINAL BUFFER SPACE (B): PROVIDES PROTECTION FOR TRAFFIC AND WORKERS	
WORK AREA: SET ASIDE FOR WORKERS, EQUIPMENT AND MATERIAL STORAGE	

TYPICAL SIGNING

(TRAFFIC MAINTAINED THROUGH PROJECT)

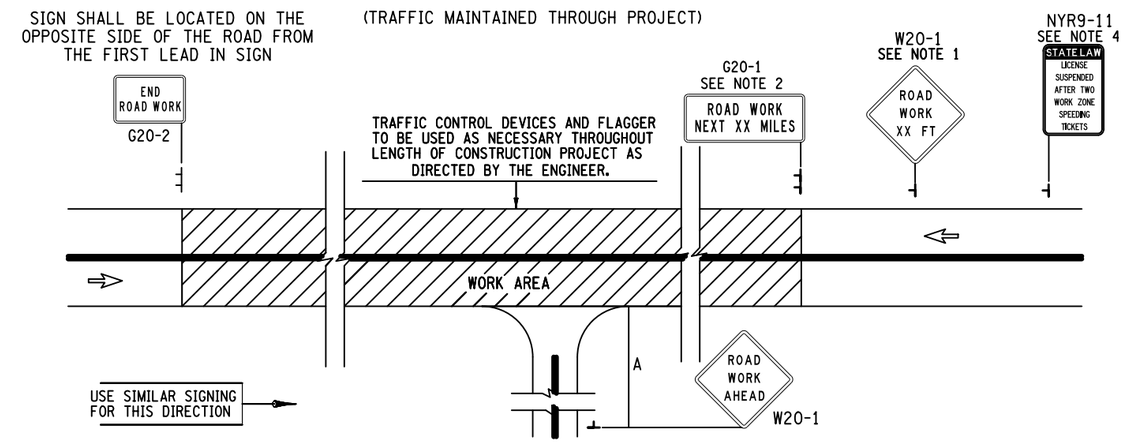

Note to Designer:
A SIGN FACE LAYOUT IS REQUIRED IN THE P S & E PACKAGE FOR ANY SIGN NOT FOUND IN THE M.U.T.C.D. AS WELL AS SPECIAL CONSTRUCTION SIGNS. SEE THE SPECIAL DESIGN ENGINEER FOR APPROPRIATE SIGN FACE LAYOUTS.

NOTES:

1. THE W20-1 SIGN SHALL ONLY BE DISPLAYED WHEN THERE ARE NO OTHER COUNTDOWN SIGNS NEEDED. THEREFORE, IT MAY BE NECESSARY TO TEMPORARILY COVER THE W20-1 SIGN TO AVOID CONFUSION WITH THE COUNTDOWN SIGNS.
THE W20-1 SIGN SHALL BE LOCATED FAR ENOUGH UPSTREAM, SO IT DOES NOT INTERFERE WITH THE SEQUENCE OF THE COUNTDOWN SIGNS.
LOCATION OF W20-1: SEE TABLE NY6H-3

2. G20-1 SIGN SHALL BE OMITTED FOR PROJECTS LESS THAN 2 MILES. THE SIGN SHALL BE PLACED AFTER THE ROAD WORK XX SIGN, BUT BEFORE ANY OTHER ROAD WORK OR COUNTDOWN SIGNS. DISTANCES SHOWN SHALL BE IN HALF MILE OR WHOLE MILE INCREMENTS. (NO DECIMALS)

3. SIGNING ADVISING MOTORISTS OF LICENSE SUSPENDED SHALL BE INSTALLED ON THE MAINLINE OF ANY HIGHWAY WORK AREA, WHEN THE WORK ENCROACHES ON A TRAVEL LANE. IT SHOULD ALSO BE USED WHERE WORK ENCROACHES ON THE SHOULDER FOR MORE THAN ONE DAY, OR WHERE WORKERS ON THE SHOULDER ARE EXPOSED TO HIGH SPEED TRAFFIC.
LICENSE SUSPENDED SIGN TO BE LOCATED UPSTREAM FROM THE FIRST WARNING SIGN AS FOLLOWS:
300 FT - 500 FT FOR SPEEDS $\leq$ 45MPH, 1,000 FT FOR SPEEDS $>$ 45 MPH.

4. SIGN NYR9-11 SHALL ONLY BE USED ON PROJECTS THAT DO NOT HAVE A WORK ZONE SPEED LIMIT

AFFIX SEAL:
ON:

ALTERED BY:
ON:

D264571
STATE OF NEW YORK
ROBERT F. SCHALLER
NO. 082465
LICENSED PROFESSIONAL ENGINEER

AS-BUILT REVISIONS
DESCRIPTION OF ALTERATIONS:

NY 78, TRANSIT ROAD, S.H. 1334A-1
FRENCH ROAD TO WEHRLE DRIVE
TOWNS OF CHEEKTOWAGA & LANCASTER
VILLAGE OF DEPEW
COUNTY: ERIE REGION: 05

PIN 5813.61
NY 78
UTILITY QUALITY LEVEL D

BRIDGES

CULVERTS

ALL DIMENSIONS IN ft UNLESS OTHERWISE NOTED

WORK ZONE TYPICALS - SHEET 1

CONTRACT NUMBER
D264571

DRAWING NO. WZT-1
SHEET NO. 49

IT IS A VIOLATION OF LAW FOR ANY PERSON, UNLESS THEY ARE ACTING UNDER THE DIRECTION OF A LICENSED PROFESSIONAL ENGINEER, ARCHITECT, LANDSCAPE ARCHITECT, OR LAND SURVEYOR, TO ALTER AN ITEM IN ANY WAY. IF AN ITEM BEARING THE STAMP OF A LICENSED PROFESSIONAL IS ALTERED, THE ALTERING ENGINEER, ARCHITECT, LANDSCAPE ARCHITECT, OR LAND SURVEYOR SHALL STAMP THE DOCUMENT AND INCLUDE THE NOTATION "ALTERED BY" FOLLOWED BY THEIR SIGNATURE, THE DATE OF SUCH ALTERATION, AND A SPECIFIC DESCRIPTION OF THE ALTERATION.

NEW YORK STATE OF OPPORTUNITY. Department of Transportation

DESIGN SUPERVISOR S. S. VAIDYA
JOB MANAGER R. F. SCHALLER
DESIGN C. L. CRITES
CHECK R. F. SCHALLER
DRAFTING C. L. CRITES
CHECK R. F. SCHALLER
PROJECT MANAGER S. S. VAIDYA

FILE NAME = 581361_CPH_HWY_WZT-1.dgn
DATE/TIME = 22-JUN-2021 12:34
USER = corites

TYPICAL DELINEATION and SIGNING for UNSIGNALIZED INTERSECTION RECONSTRUCTION

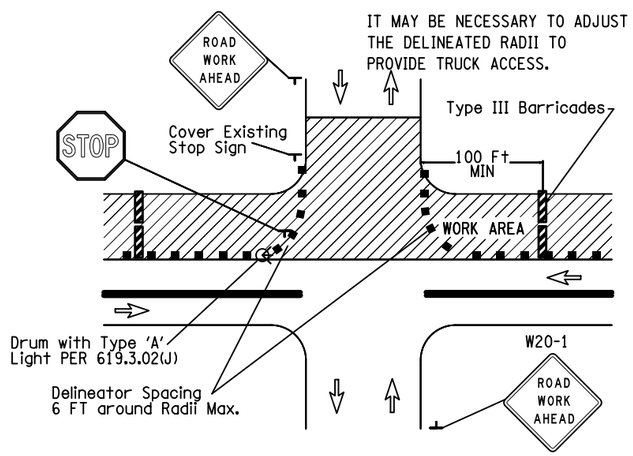

INTERSECTION TREATMENT

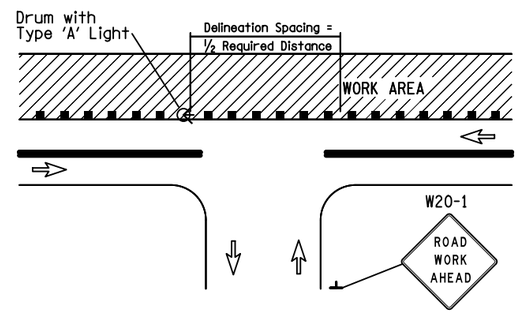

TYPICAL DELINEATION FOR DRIVEWAY ENTRANCES

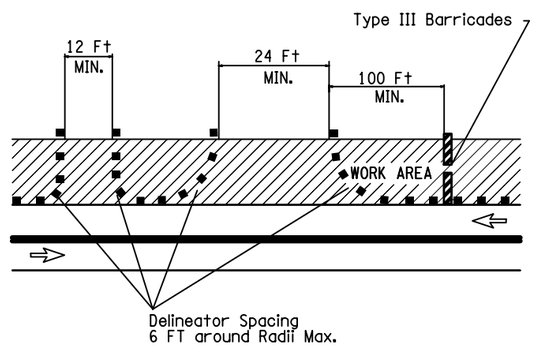

DRIVEWAY TREATMENTS

THE CONTRACTOR MUST MAINTAIN AT LEAST ONE DRIVEWAY ENTRANCE TO ALL COMMERCIAL PROPERTIES.

WHEN IT IS NECESSARY TO CLOSE A COMMERCIAL DRIVEWAY DUE TO CONSTRUCTION OPERATIONS, THE CONTRACTOR MUST PROVIDE A TEMPORARY DRIVEWAY TO THE PROPERTY UNLESS THE WORK IS COMPLETED DURING THE ESTABLISHMENTS NON-WORKING HOURS.

THE CONTRACTOR MUST NOTIFY THE PROPERTY OWNER AT LEAST 24 HOURS IN ADVANCE OF CLOSING THE DRIVEWAY.

A MIMINUM OF 6 DELINEATION DEVICES SHOULD BE USED AROUND THE RADIUS FOR EITHER DRIVEWAYS AND/OR INTERSECTIONS

* SEE CONST. SPECIFICATION 619-3.02(J) FOR MORE DETAILS,

CROSSWALK/STOP BAR PAVEMENT MARKING INSTALLATION (RIGHT LANE)

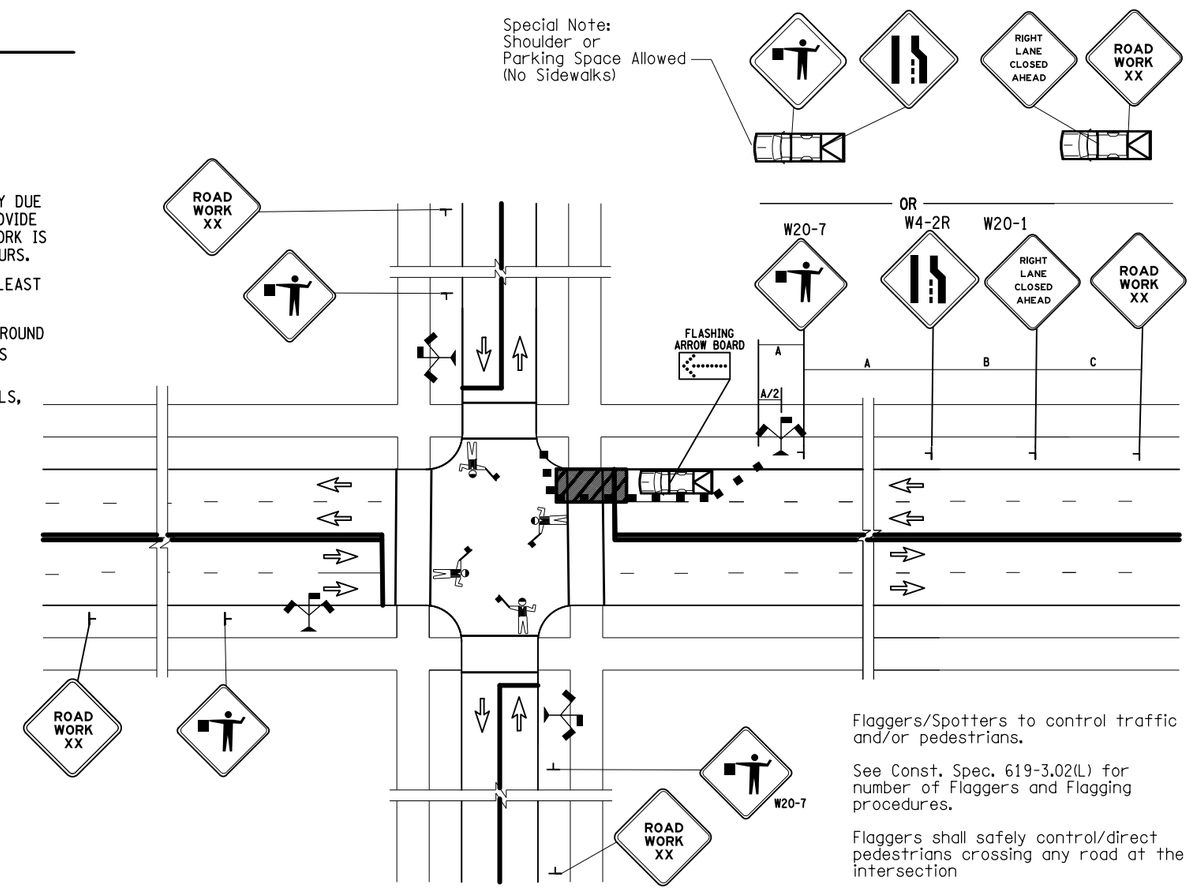

Flaggers/Spotters to control traffic and/or pedestrians.

See Const. Spec. 619-3.02(L) for number of Flaggers and Flagging procedures.

Flaggers shall safely control/direct pedestrians crossing any road at the intersection

AFFIX SEAL: ON:

ALTERED BY: ON:

D264571

STATE OF NEW YORK · ROBERT F. SCHALLER · LICENSED PROFESSIONAL ENGINEER · NO. 082465

AS-BUILT REVISIONS DESCRIPTION OF ALTERATIONS:	NY 78, TRANSIT ROAD, S.H. 1334A-1 FRENCH ROAD TO WEHRLE DRIVE TOWNS OF CHEEKTOWAGA & LANCASTER VILLAGE OF DEPEW COUNTY: ERIE REGION: 05	PIN 5813.61 NY 78 UTILITY QUALITY LEVEL D	BRIDGES	CULVERTS	ALL DIMENSIONS IN ft UNLESS OTHERWISE NOTED WORK ZONE TYPICALS - SHEET 2

CONTRACT NUMBER D264571

DRAWING NO. WZT-2

SHEET NO. 50

IT IS A VIOLATION OF LAW FOR ANY PERSON, UNLESS THEY ARE ACTING UNDER THE DIRECTION OF A LICENSED PROFESSIONAL ENGINEER, ARCHITECT, LANDSCAPE ARCHITECT, OR LAND SURVEYOR, TO ALTER AN ITEM IN ANY WAY. IF AN ITEM BEARING THE STAMP OF A LICENSED PROFESSIONAL IS ALTERED, THE ALTERING ENGINEER, ARCHITECT, LANDSCAPE ARCHITECT, OR LAND SURVEYOR SHALL STAMP THE DOCUMENT AND INCLUDE THE NOTATION "ALTERED BY" FOLLOWED BY THEIR SIGNATURE, THE DATE OF SUCH ALTERATION, AND A SPECIFIC DESCRIPTION OF THE ALTERATION.

NEW YORK STATE OF OPPORTUNITY. Department of Transportation

PROJECT MANAGER S. S. VAIDYA
CHECK R. F. SCHALLER
DRAFTING C. L. CRITES
CHECK R. F. SCHALLER
DESIGN C. L. CRITES
JOB MANAGER R. F. SCHALLER
DESIGN SUPERVISOR S. S. VAIDYA
FILE NAME = 581361_CPH_HWY_WZT-2.dgn
DATE/TIME = 22-JUN-2021 12:34
USER = cartes

CROSSWALK/STOP BAR PAVEMENT MARKING INSTALLATION (ON FAR SIDE OF INTERSECTION)

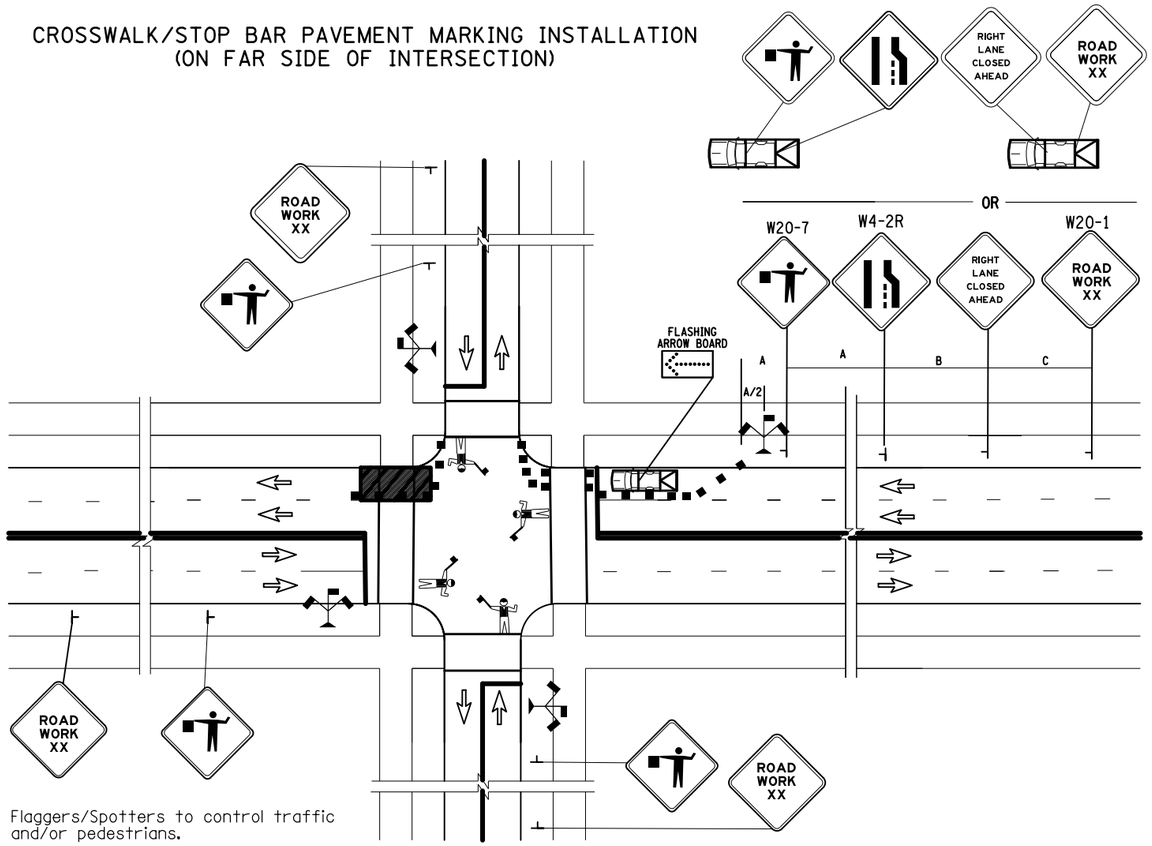

Flaggers/Spotters to control traffic and/or pedestrians.

See Const. Spec. 619-3.02(L) for number of Flaggers and Flagging procedures.

Flaggers shall safely control/direct pedestrians crossing any road at the intersection

CROSSWALK/STOP BAR PAVEMENT MARKING INSTALLATION (LEFT LANE)

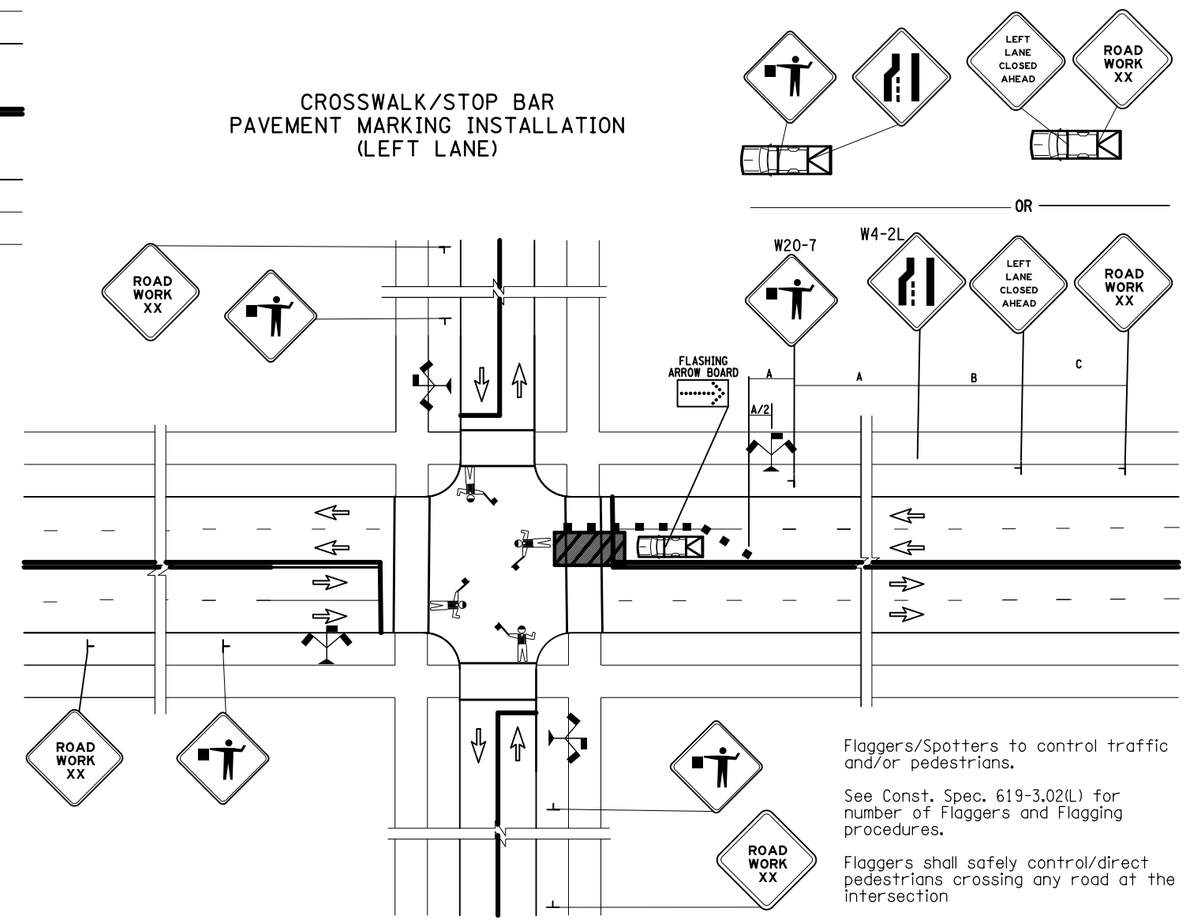

Flaggers/Spotters to control traffic and/or pedestrians.

See Const. Spec. 619-3.02(L) for number of Flaggers and Flagging procedures.

Flaggers shall safely control/direct pedestrians crossing any road at the intersection

AFFIX SEAL: ON:	ALTERED BY: ON:
D264571 STATE OF NEW YORK ROBERT F. SCHALLER LICENSED PROFESSIONAL ENGINEER NO. 082465	

AS-BUILT REVISIONS DESCRIPTION OF ALTERATIONS:	NY 78, TRANSIT ROAD, S.H. 1334A-1	PIN 5813.61 NY 78 UTILITY QUALITY LEVEL D	BRIDGES	CULVERTS	ALL DIMENSIONS IN ft UNLESS OTHERWISE NOTED	CONTRACT NUMBER D264571
	FRENCH ROAD TO WEHRLE DRIVE				WORK ZONE TYPICALS - SHEET 3	
	TOWNS OF CHEEKTOWAGA & LANCASTER					DRAWING NO. WZT-3
	VILLAGE OF DEPEW					SHEET NO. 51
	COUNTY: ERIE REGION: 05					

IT IS A VIOLATION OF LAW FOR ANY PERSON, UNLESS THEY ARE ACTING UNDER THE DIRECTION OF A LICENSED PROFESSIONAL ENGINEER, ARCHITECT, LANDSCAPE ARCHITECT, OR LAND SURVEYOR, TO ALTER AN ITEM IN ANY WAY. IF AN ITEM BEARING THE STAMP OF A LICENSED PROFESSIONAL IS ALTERED, THE ALTERING ENGINEER, ARCHITECT, LANDSCAPE ARCHITECT, OR LAND SURVEYOR SHALL STAMP THE DOCUMENT AND INCLUDE THE NOTATION "ALTERED BY" FOLLOWED BY THEIR SIGNATURE, THE DATE OF SUCH ALTERATION, AND A SPECIFIC DESCRIPTION OF THE ALTERATION.

NEW YORK STATE OF OPPORTUNITY. Department of Transportation

PROJECT MANAGER S. S. VAIDYA
CHECK R. F. SCHALLER
DRAFTING C. L. CRITES
CHECK R. F. SCHALLER
DESIGN C. L. CRITES
JOB MANAGER R. F. SCHALLER
DESIGN SUPERVISOR S. S. VAIDYA
FILE NAME = 581361_CPH_HWY_WZT-3.dgn
DATE/TIME = 22-JUN-2021 12:34
USER = corites

CROSSWALK/STOP BAR PAVEMENT MARKING INSTALLATION
(ON 5-LANE ROADWAY, 3-LANES CLOSED)

SHORT TERM LANE CLOSURE
FOR PREFORMED STRIPING INSTALLATION

Flaggers/Spotters to control traffic and/or pedestrians.

See Const. Spec. 619-3.02(L) for number of Flaggers and Flagging procedures.

Flaggers shall safely control/direct pedestrians crossing any road at the intersection

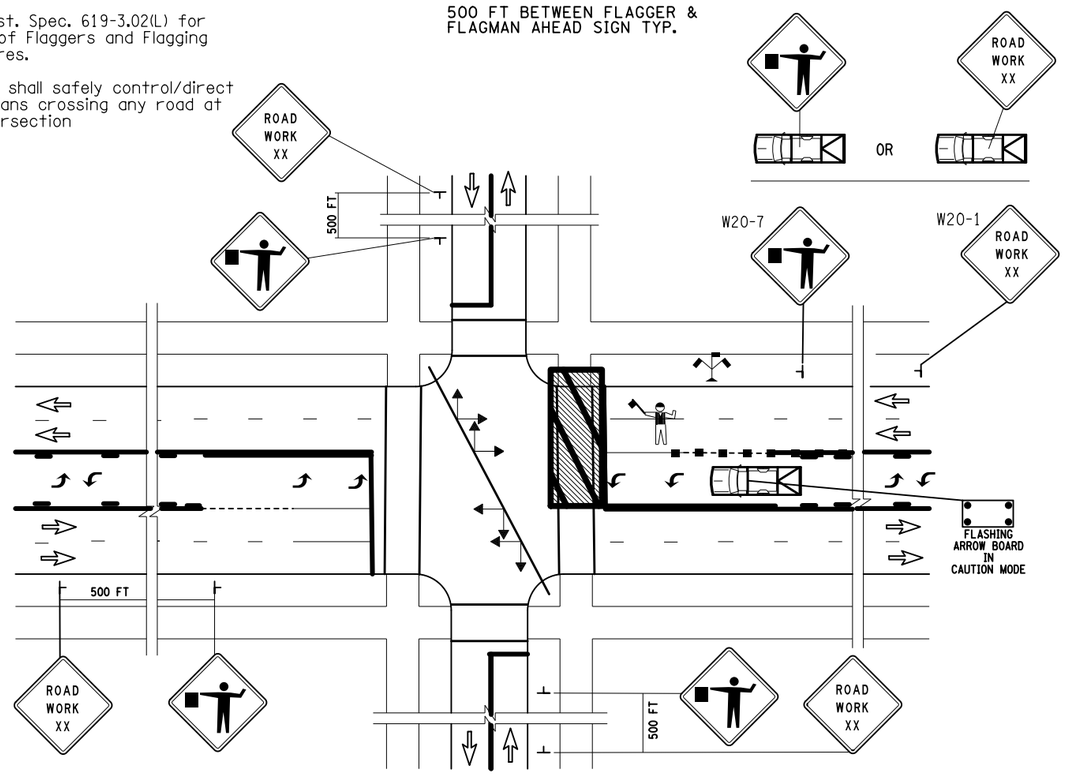

TRAFFIC SIGNING FOR MILLED OFF RAMP

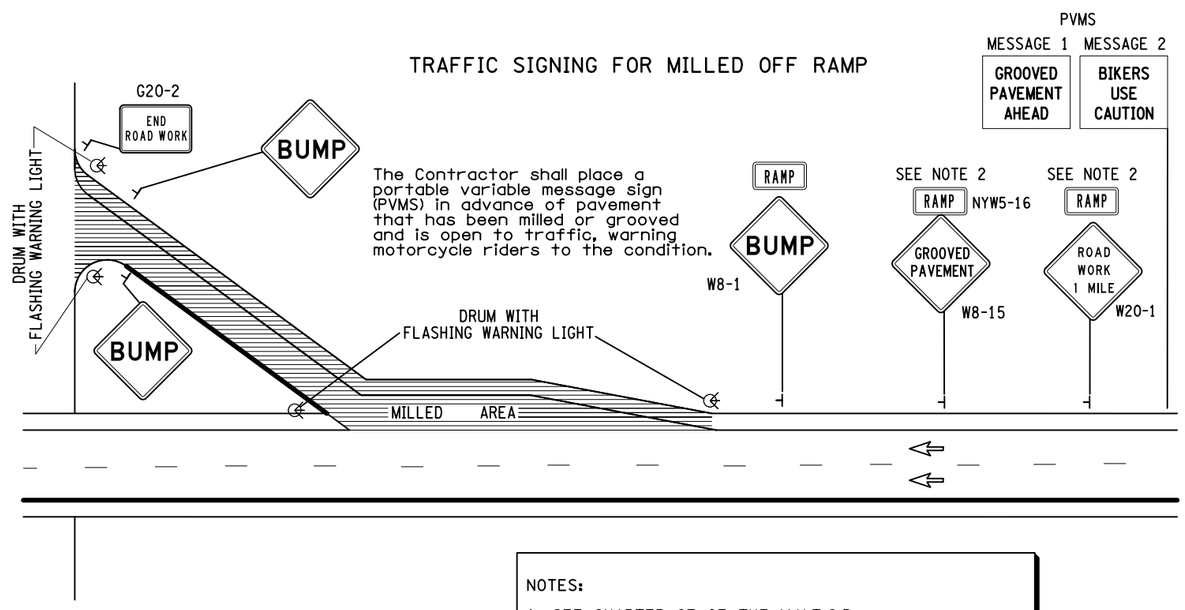

NOTES:

1. SEE CHAPTER 6F OF THE M.U.T.C.D.
2. ADVANCE POSTING DISTANCE AS PER TABLE NY2C-4.

AFFIX SEAL:
ON:

ALTERED BY:
ON:

D264571

STATE OF NEW YORK · ROBERT F. SCHALLER · LICENSED PROFESSIONAL ENGINEER · NO. 082465

AS-BUILT REVISIONS
DESCRIPTION OF ALTERATIONS:

NY 78, TRANSIT ROAD, S.H. 1334A-1
FRENCH ROAD TO WEHRLE DRIVE
TOWNS OF CHEEKTOWAGA & LANCASTER
VILLAGE OF DEPEW
COUNTY: ERIE REGION: 05

PIN 5813.61
NY 78
UTILITY QUALITY LEVEL D

BRIDGES

CULVERTS

ALL DIMENSIONS IN ft UNLESS OTHERWISE NOTED

WORK ZONE TYPICALS - SHEET 4

CONTRACT NUMBER
D264571

DRAWING NO. WZT-4
SHEET NO. 52

IT IS A VIOLATION OF LAW FOR ANY PERSON, UNLESS THEY ARE ACTING UNDER THE DIRECTION OF A LICENSED PROFESSIONAL ENGINEER, ARCHITECT, LANDSCAPE ARCHITECT, OR LAND SURVEYOR, TO ALTER AN ITEM IN ANY WAY. IF AN ITEM BEARING THE STAMP OF A LICENSED PROFESSIONAL IS ALTERED, THE ALTERING ENGINEER, ARCHITECT, LANDSCAPE ARCHITECT, OR LAND SURVEYOR SHALL STAMP THE DOCUMENT AND INCLUDE THE NOTATION "ALTERED BY" FOLLOWED BY THEIR SIGNATURE, THE DATE OF SUCH ALTERATION, AND A SPECIFIC DESCRIPTION OF THE ALTERATION.

NEW YORK STATE OF OPPORTUNITY. Department of Transportation

PROJECT MANAGER S. S. VAIDYA
CHECK R. F. SCHALLER
DRAFTING C. L. CRITES
CHECK R. F. SCHALLER
DESIGN C. L. CRITES
JOB MANAGER R. F. SCHALLER
DESIGN SUPERVISOR S. S. VAIDYA

FILE NAME = 581361_CPH_HWY_WZT-4.dgn
DATE/TIME = 22-JUN-2021 12:34
USER = cc rites

TRAFFIC SIGNING FOR MILLED ON RAMP

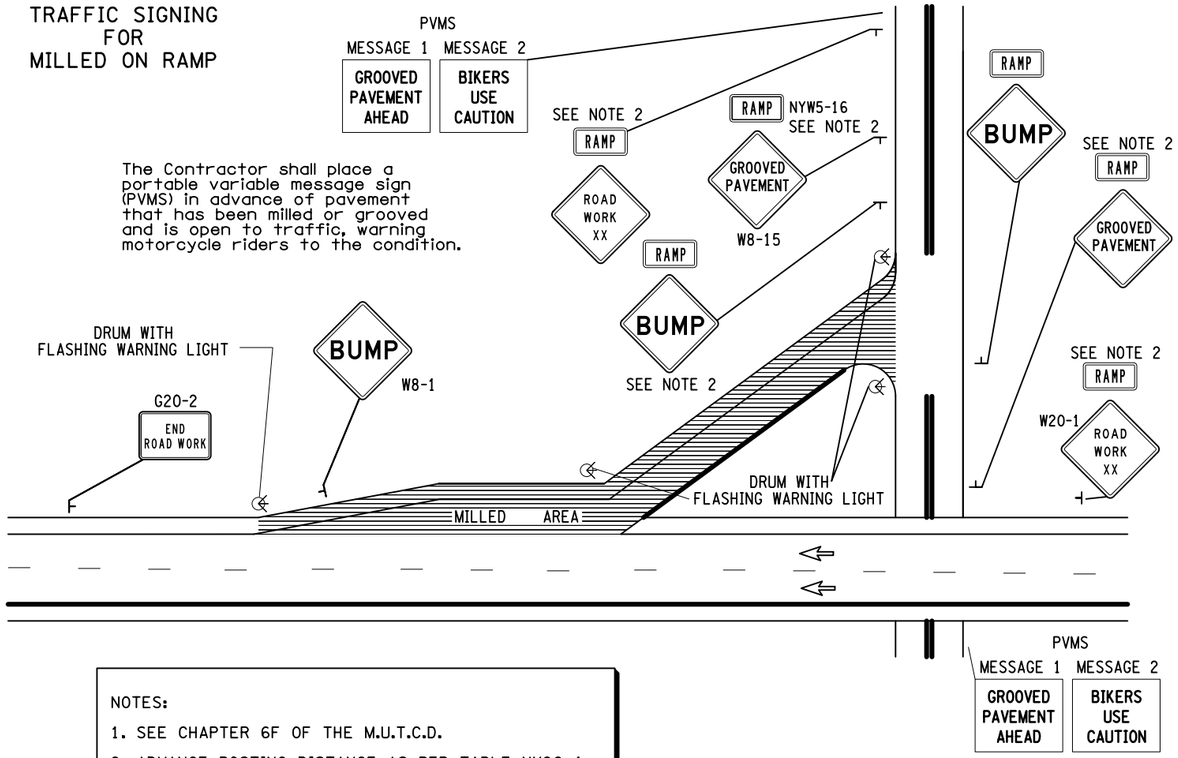

The Contractor shall place a portable variable message sign (PVMS) in advance of pavement that has been milled or grooved and is open to traffic, warning motorcycle riders to the condition.

NOTES:

1. SEE CHAPTER 6F OF THE M.U.T.C.D.
2. ADVANCE POSTING DISTANCE AS PER TABLE NY2C-4.

TRAFFIC SIGNING FOR MILLED ROADWAY

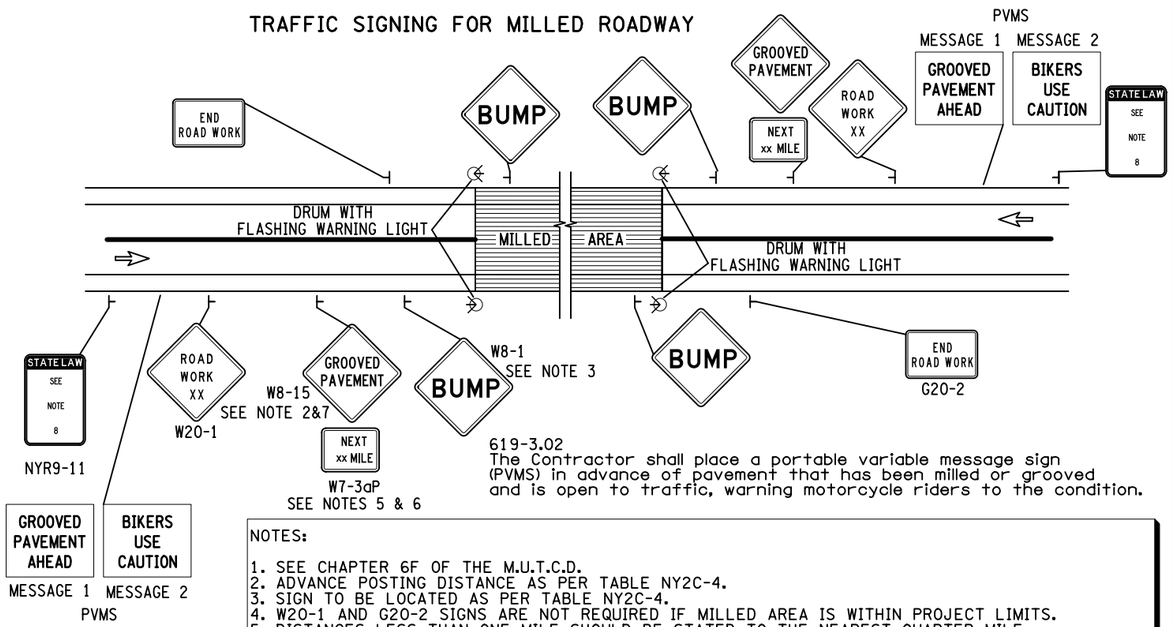

619-3.02
The Contractor shall place a portable variable message sign (PVMS) in advance of pavement that has been milled or grooved and is open to traffic, warning motorcycle riders to the condition.

NOTES:

1. SEE CHAPTER 6F OF THE M.U.T.C.D.
2. ADVANCE POSTING DISTANCE AS PER TABLE NY2C-4.
3. SIGN TO BE LOCATED AS PER TABLE NY2C-4.
4. W20-1 AND G20-2 SIGNS ARE NOT REQUIRED IF MILLED AREA IS WITHIN PROJECT LIMITS.
5. DISTANCES LESS THAN ONE MILE SHOULD BE STATED TO THE NEAREST QUARTER MILE. DISTANCES BETWEEN ONE AND THREE MILES SHOULD BE STATED TO THE NEAREST HALF MILE. DISTANCES OVER THREE MILES SHOULD BE STATED TO THE NEAREST WHOLE MILE.
6. WHEN GROOVED PAVEMENT EXTENDS FOR LONG DISTANCE, ADDITIONAL W8-15 WITH SUPPLEMENTAL W7-3aP PANELS SHALL BE POSTED AS FOLLOWS:

GROOVED PAVEMENT DISTANCE	SUPPLEMENTAL POSTING DISTANCE
LESS THAN ONE MILE	EVERY QUARTER MILE
BETWEEN ONE AND THREE MILES	EVERY HALF MILE
GREATER THAN THREE MILES	EVERY WHOLE MILE

WHEN THE W8-15 IS LOCATED WITHIN 1,000 Ft OF MILLED AREA, THE W7-3aP PANEL SHALL BE OMITTED.

7. ADDITIONAL SIGNING, SUPPLEMENTED WITH AUXILIARY MILEAGE SUBPANELS MAY BE REQUIRED AT APPROPRIATE INTERVALS

8. SIGN NYR9-11 SHALL ONLY BE USED IN WORK ZONES WITH OUT A WORK ZONE SPEED LIMIT. SIGN NYR9-12 SHALL ONLY BE USED IN WORK ZONES THAT HAVE A WORK ZONE SPEED LIMIT.

AFFIX SEAL:
ON:

ALTERED BY:
ON:

D264571
STATE OF NEW YORK
ROBERT F. SCHALLER
NO. 082465
LICENSED PROFESSIONAL ENGINEER

AS-BUILT REVISIONS
DESCRIPTION OF ALTERATIONS:

NY 78, TRANSIT ROAD, S.H. 1334A-1
FRENCH ROAD TO WEHRLE DRIVE
TOWNS OF CHEEKTOWAGA & LANCASTER
VILLAGE OF DEPEW
COUNTY: ERIE REGION: 05

PIN 5813.61
NY 78
UTILITY QUALITY LEVEL D

BRIDGES

CULVERTS

ALL DIMENSIONS IN ft UNLESS OTHERWISE NOTED

WORK ZONE TYPICALS - SHEET 5

CONTRACT NUMBER
D264571

DRAWING NO. WZT-5
SHEET NO. 53

IT IS A VIOLATION OF LAW FOR ANY PERSON, UNLESS THEY ARE ACTING UNDER THE DIRECTION OF A LICENSED PROFESSIONAL ENGINEER, ARCHITECT, LANDSCAPE ARCHITECT, OR LAND SURVEYOR, TO ALTER AN ITEM IN ANY WAY. IF AN ITEM BEARING THE STAMP OF A LICENSED PROFESSIONAL IS ALTERED, THE ALTERING ENGINEER, ARCHITECT, LANDSCAPE ARCHITECT, OR LAND SURVEYOR SHALL STAMP THE DOCUMENT AND INCLUDE THE NOTATION "ALTERED BY" FOLLOWED BY THEIR SIGNATURE, THE DATE OF SUCH ALTERATION, AND A SPECIFIC DESCRIPTION OF THE ALTERATION.

NEW YORK STATE OF OPPORTUNITY. Department of Transportation

PROJECT MANAGER S. S. VAIDYA
CHECK R. F. SCHALLER
DRAFTING C. L. CRITES
CHECK R. F. SCHALLER
DESIGN C. L. CRITES
JOB MANAGER R. F. SCHALLER
DESIGN SUPERVISOR S. S. VAIDYA
FILE NAME = 581361_CPH_HWY_WZT-5.dgn
DATE/TIME = 22-JUN-2021 12:34
USER = cortes

TRAFFIC SIGNING FOR MILLED ROADWAY with Side Road

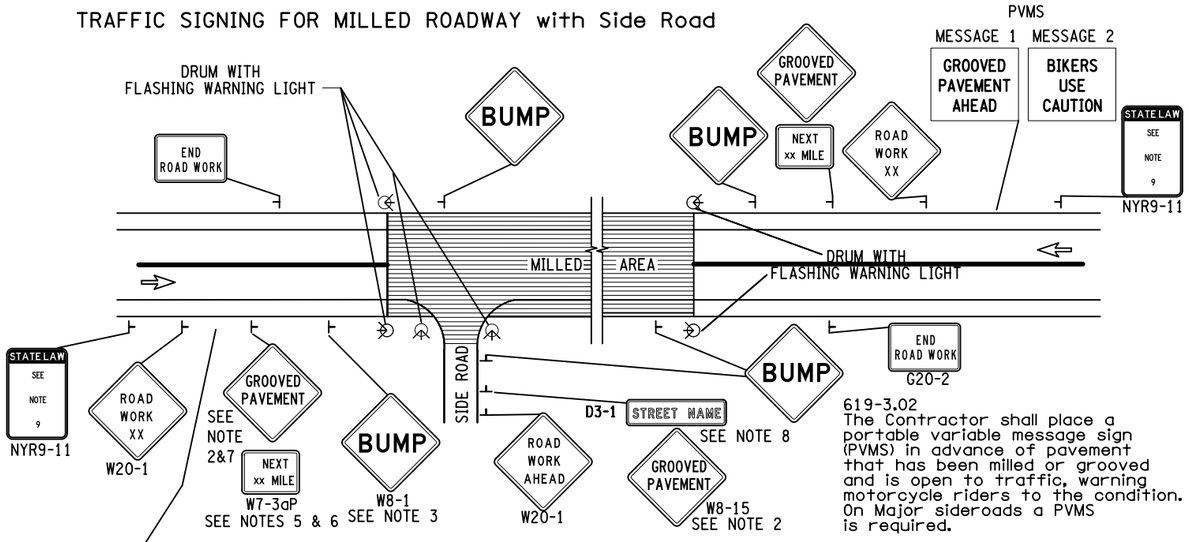

619-3.02
The Contractor shall place a portable variable message sign (PVMS) in advance of pavement that has been milled or grooved and is open to traffic, warning motorcycle riders to the condition. On Major sideroads a PVMS is required.

NOTES:

1. SEE CHAPTER 6F OF THE M.U.T.C.D.
2. ADVANCE POSTING DISTANCE AS PER TABLE NY2C-4.
3. SIGN TO BE LOCATED AS PER TABLE NY2C-4.
4. W20-1 AND G20-2 SIGNS ARE NOT REQUIRED IF MILLED AREA IS WITHIN PROJECT LIMITS.
5. DISTANCES LESS THAN ONE MILE SHOULD BE STATED TO THE NEAREST QUARTER MILE. DISTANCES BETWEEN ONE AND THREE MILES SHOULD BE STATED TO THE NEAREST HALF MILE. DISTANCES OVER THREE MILES SHOULD BE STATED TO THE NEAREST WHOLE MILE.
6. WHEN GROOVED PAVEMENT EXTENDS FOR LONG DISTANCE, ADDITIONAL W8-15 WITH SUPPLEMENTAL W7-3aP PANELS SHALL BE POSTED AS FOLLOWS:

GROOVED PAVEMENT DISTANCE	SUPPLEMENTAL POSTING DISTANCE
LESS THAN ONE MILE	EVERY QUARTER MILE
BETWEEN ONE AND THREE MILES	EVERY HALF MILE
GREATER THAN THREE MILES	EVERY WHOLE MILE

WHEN THE W8-15 IS LOCATED WITHIN 1,000 Ft OF MILLED AREA, THE W7-3aP PANEL SHALL BE OMITTED.

7. ADDITIONAL SIGNING, SUPPLEMENTED WITH AUXILIARY MILEAGE SUBPANELS MAY BE REQUIRED AT APPROPRIATE INTERVALS
8. WHEN SIDE STREET IS MILLED AS WELL, THE STREET NAME SIGN IS NOT REQUIRED.
9. SIGN NYR9-11 SHALL ONLY BE USED IN WORK ZONES WITH OUT A WORK ZONE SPEED LIMIT. SIGN NYR9-12 SHALL ONLY BE USED IN WORK ZONES THAT HAVE A WORK ZONE SPEED LIMIT.

2-LANES CLOSED ON A 5-LANE ROADWAY

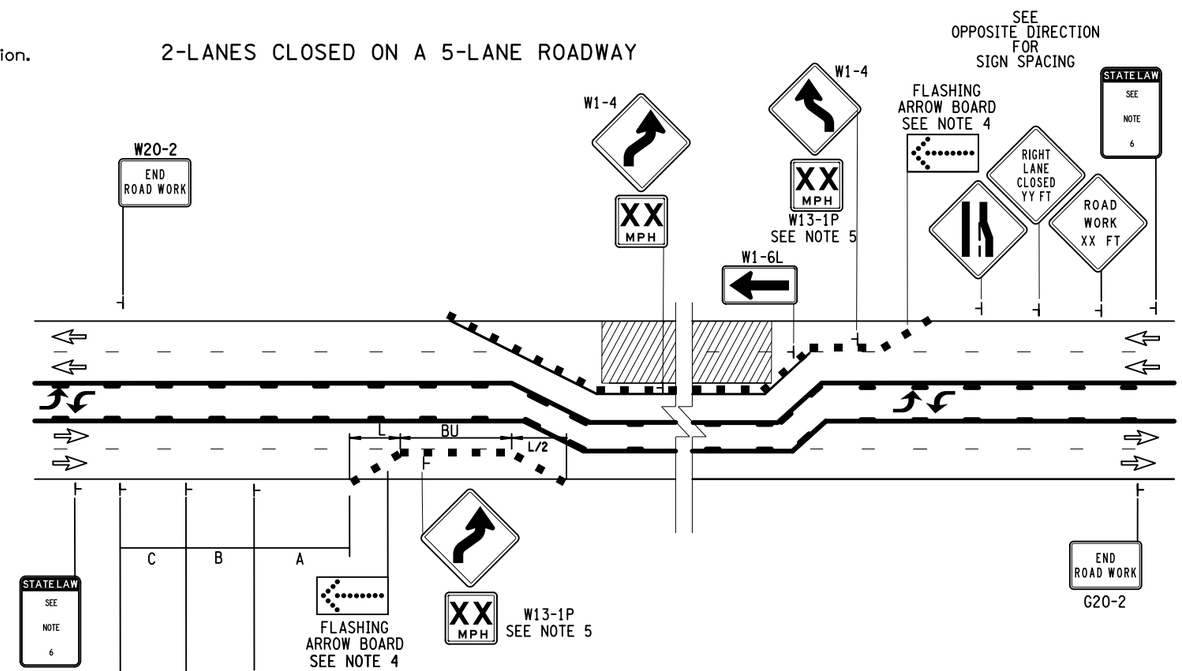

NOTES:

1. SEE CHAPTER 6F OF THE M.U.T.C.D.
2. "L" APPROX. = TRANSITION LENGTH. SEE TABLE 6H-4, STANDARD TAPER LENGTHS
3. THE MAXIMUM SPACING BETWEEN DELINEATION DEVICES SHALL BE 40 Ft.
4. THE W1-6 SHALL BE USED IF SPEED 40 MPH.(Pre-Construction THE FLASHING ARROW PANEL IS REQUIRED FOR SPEED ≥ 40 MPH. (Pre-Construction)
5. "XX" POSTED SPEED IS TO BE DETERMINED BY THE REGIONAL TRAFFIC ENGINEER. ADVANCE POSTING DISTANCE SHALL BE PER TABLE 2C-4 OF THE M.U.T.C.D.
6. SIGN NYR9-11 SHALL ONLY BE USED IN WORK ZONES WITH OUT A WORK ZONE SPEED LIMIT. SIGN NYR9-12 SHALL BE USED IN WORK ZONES THAT HAVE A WORK ZONE SPEED LIMIT.

AFFIX SEAL:
ON:

D264571
STATE OF NEW YORK
ROBERT F. SCHALLER
NO. 082465
LICENSED PROFESSIONAL ENGINEER

ALTERED BY:
ON:

AS-BUILT REVISIONS
DESCRIPTION OF ALTERATIONS:

NY 78, TRANSIT ROAD, S.H. 1334A-1
FRENCH ROAD TO WEHRLE DRIVE
TOWNS OF CHEEKTOWAGA & LANCASTER
VILLAGE OF DEPEW
COUNTY: ERIE REGION: 05

PIN 5813.61
NY 78
UTILITY QUALITY LEVEL D

BRIDGES

CULVERTS

ALL DIMENSIONS IN ft UNLESS OTHERWISE NOTED

WORK ZONE TYPICALS - SHEET 6

CONTRACT NUMBER
D264571

DRAWING NO. WZT-6
SHEET NO. 54

IT IS A VIOLATION OF LAW FOR ANY PERSON, UNLESS THEY ARE ACTING UNDER THE DIRECTION OF A LICENSED PROFESSIONAL ENGINEER, ARCHITECT, LANDSCAPE ARCHITECT, OR LAND SURVEYOR, TO ALTER AN ITEM IN ANY WAY. IF AN ITEM BEARING THE STAMP OF A LICENSED PROFESSIONAL IS ALTERED, THE ALTERING ENGINEER, ARCHITECT, LANDSCAPE ARCHITECT, OR LAND SURVEYOR SHALL STAMP THE DOCUMENT AND INCLUDE THE NOTATION "ALTERED BY" FOLLOWED BY THEIR SIGNATURE, THE DATE OF SUCH ALTERATION, AND A SPECIFIC DESCRIPTION OF THE ALTERATION.

NEW YORK STATE OF OPPORTUNITY. Department of Transportation

DESIGN SUPERVISOR S. S. VAIDYA
JOB MANAGER R. F. SCHALLER
DESIGN C. L. CRITES
CHECK R. F. SCHALLER
DRAFTING C. L. CRITES
CHECK R. F. SCHALLER
PROJECT MANAGER S. S. VAIDYA
FILE NAME = 581361_CPH_HWY_WZT-6.dgn
DATE/TIME = 22-JUN-2021 12:34
USER = coritcs

PEDESTRIAN TRAFFIC CONTROL FOR SIDEWALK CLOSURES IN THE VICINITY OF A WORK AREA WITH TEMPORARY SIDEWALK

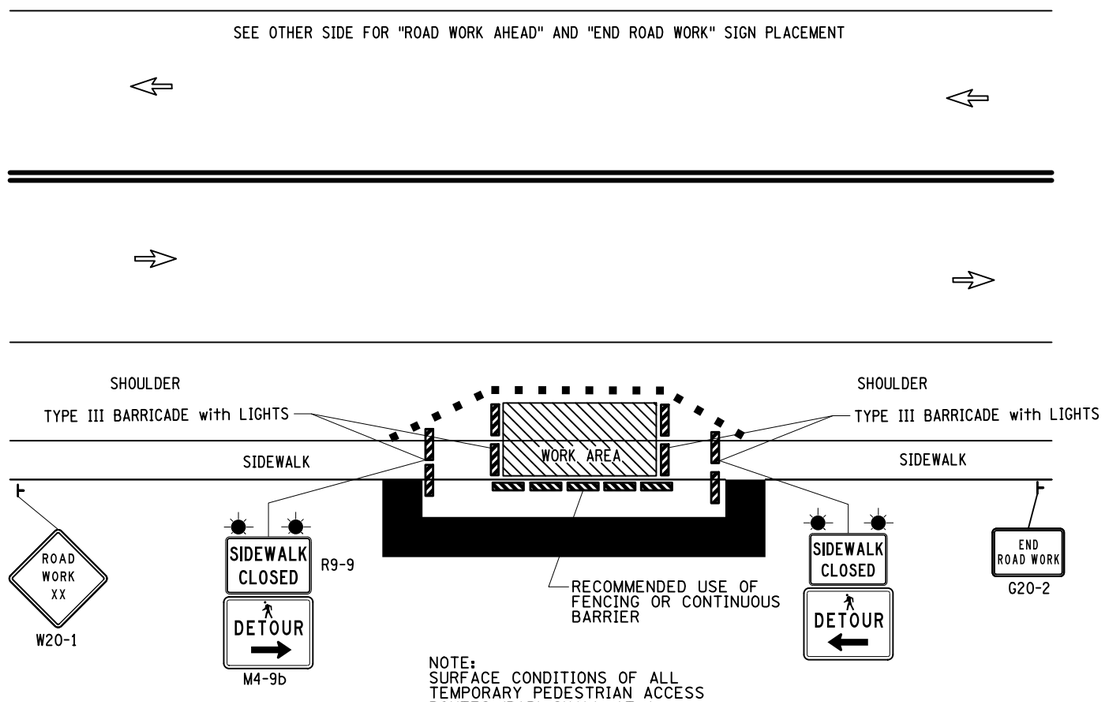

NOTE:
SURFACE CONDITIONS OF ALL TEMPORARY PEDESTRIAN ACCESS ROUTES (PAR) SHALL AT A MINIMUM BE STABLE, FIRM AND SKID RESISTANT ALL WEATHER COMPACTED GRAVEL SURFACE OR OTHER MATERIAL CAPABLE OF MEETING ADAAG REQUIREMENTS.

WORK ZONE TRAFFIC CONTROL for SHORT DURATION STATIONARY CENTER LEFT TURN LANE AND INTERIOR LANE CLOSED on HIGH SPEED (45-55 mph) 4-LANE CONVENTIONAL HIGHWAY

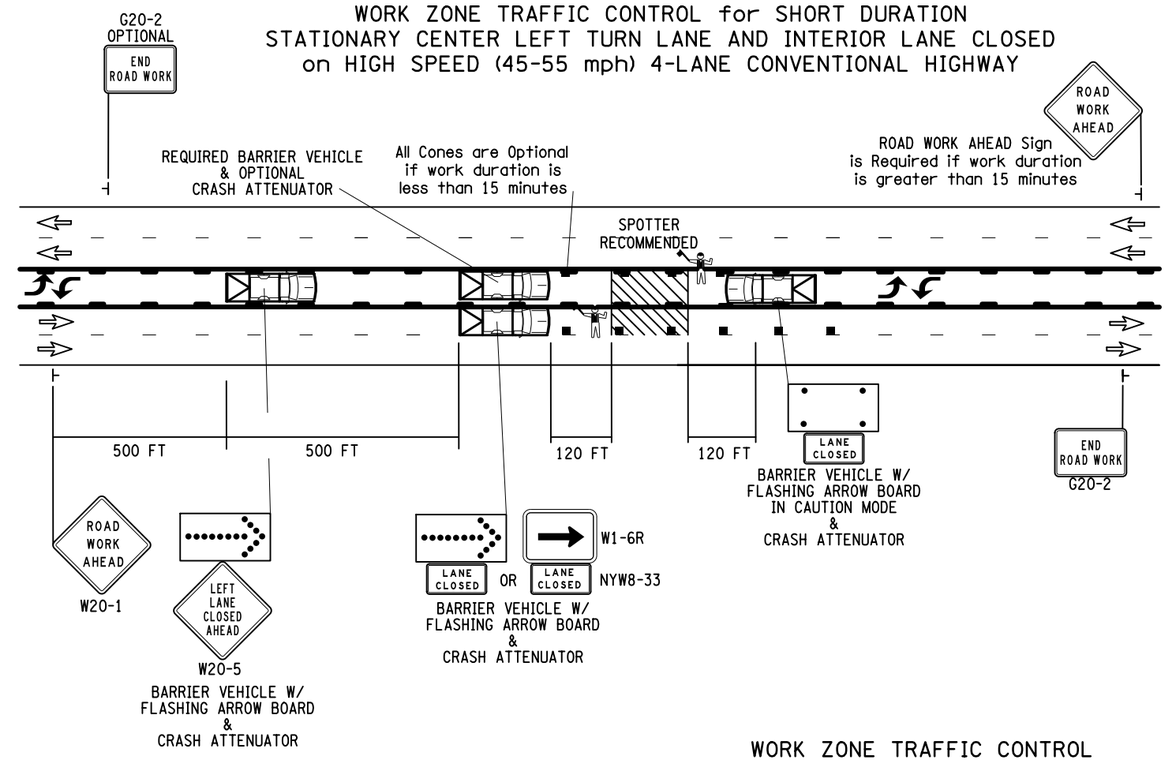

WORK ZONE TRAFFIC CONTROL FOR MOBILE MAINTENANCE WORK IN THE CENTER TURN LANE WITH THE LEFT LANE CLOSED OF A 5-LANE ROADWAY

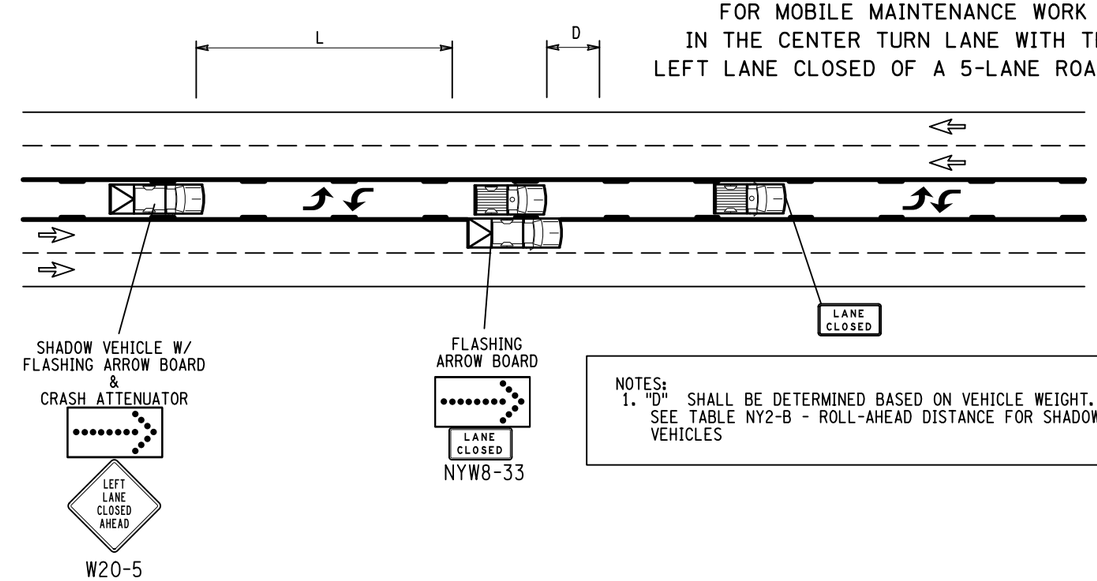

NOTES:
1. "D" SHALL BE DETERMINED BASED ON VEHICLE WEIGHT. SEE TABLE NY2-B - ROLL-AHEAD DISTANCE FOR SHADOW VEHICLES

AFFIX SEAL:
ON:

ALTERED BY:
ON:

D264571
STATE OF NEW YORK
ROBERT F. SCHALLER
NO. 082465
LICENSED PROFESSIONAL ENGINEER

AS-BUILT REVISIONS
DESCRIPTION OF ALTERATIONS:

NY 78, TRANSIT ROAD, S.H. 1334A-1	PIN 5813.61	BRIDGES	CULVERTS	ALL DIMENSIONS IN ft UNLESS OTHERWISE NOTED	CONTRACT NUMBER
FRENCH ROAD TO WEHRLE DRIVE	NY 78			WORK ZONE TYPICALS - SHEET 7	D264571
TOWNS OF CHEEKTOWAGA & LANCASTER	UTILITY QUALITY LEVEL D				DRAWING NO. WZT-7
VILLAGE OF DEPEW					SHEET NO. 55
COUNTY: ERIE REGION: 05					

IT IS A VIOLATION OF LAW FOR ANY PERSON, UNLESS THEY ARE ACTING UNDER THE DIRECTION OF A LICENSED PROFESSIONAL ENGINEER, ARCHITECT, LANDSCAPE ARCHITECT, OR LAND SURVEYOR, TO ALTER AN ITEM IN ANY WAY. IF AN ITEM BEARING THE STAMP OF A LICENSED PROFESSIONAL IS ALTERED, THE ALTERING ENGINEER, ARCHITECT, LANDSCAPE ARCHITECT, OR LAND SURVEYOR SHALL STAMP THE DOCUMENT AND INCLUDE THE NOTATION "ALTERED BY" FOLLOWED BY THEIR SIGNATURE, THE DATE OF SUCH ALTERATION, AND A SPECIFIC DESCRIPTION OF THE ALTERATION.

NEW YORK STATE OF OPPORTUNITY. Department of Transportation

PROJECT MANAGER S. S. VAIDYA
CHECK R. F. SCHALLER
DRAFTING C. L. CRITES
CHECK R. F. SCHALLER
DESIGN C. L. CRITES
JOB MANAGER R. F. SCHALLER
DESIGN SUPERVISOR S. S. VAIDYA
FILE NAME = 581361_CPH_HWY_WZT-7.dgn
DATE/TIME = 22-JUN-2021 12:35
USER = cortes

WORK ZONE TRAFFIC CONTROL FOR SHORT-TERM MAINTENANCE WORK IN THE CENTER TURN LANE AND THE LEFT LANE OF A 5-LANE ROADWAY

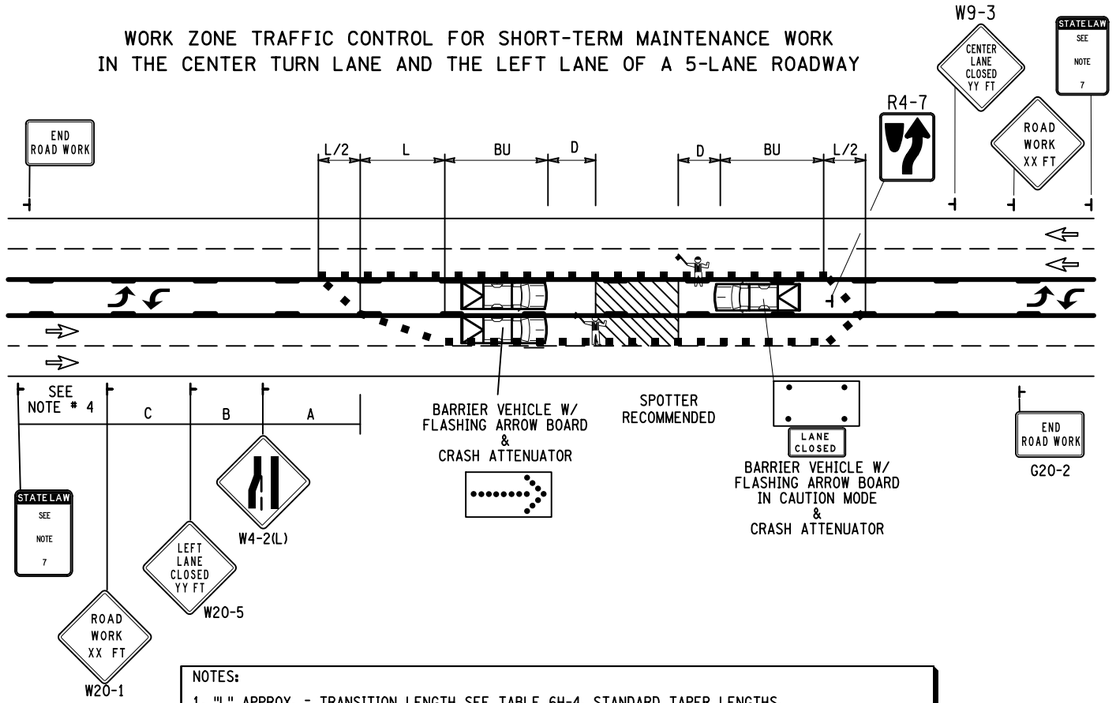

NOTES:

1. "L" APPROX. = TRANSITION LENGTH SEE TABLE 6H-4, STANDARD TAPER LENGTHS.
2. "BU" APPROX. = BUFFER ZONE SEE TABLE 6C-2, LONGITUDINAL BUFFER.
3. THE MAXIMUM SPACING BETWEEN DELINEATION DEVICES SHALL BE 40 L.F. MAX.
4. INSTALL SIGN 1000 FT UPSTREAM OF THE FIRST WARNING SIGN ON HIGHWAYS WITH THE 85TH PERCENTILE SPEEDS EQUAL TO OR GREATER THAN 45 MPH AND 300 FT - 500 FT UPSTREAM FOR SPEEDS UNDER 45 MPH.
5. "D" SHALL BE DETERMINED BASED ON VEHICLE WEIGHT. SEE TABLE NY2-A-ROLL-AHEAD DISTANCE FOR BARRIER VEHICLES.
6. THE NEED FOR A FLAGGER IS TO BE DETERMINED BASED ON YHE NEED TO CONTROL TRAFFIC WHILE WORK VEHICLES ENTER AND EXIT THE WORK ZONE.
7. SIGN NYR9-11 SHALL ONLY BE USED IN WORK ZONES WITH OUT A WORK ZONE SPEED LIMIT. SIGN NY9-12 SHALL ONLY BE USED IN WORK ZONES THAT HAVE A WORK ZONE SPEED LIMIT.

PEDESTRIAN ACCOMODATION DETAILS FOR LOCATIONS WITH NO SHOULDER

REFER TO 619-50 & 619-51 STANDARD SHEETS AND PEDESTRIAN DETOUR DETAIL ON DWG. WZT-7 FOR TYPICAL SIGNAGE/MATERIALS

OPTION 1: DETOUR ROUTE

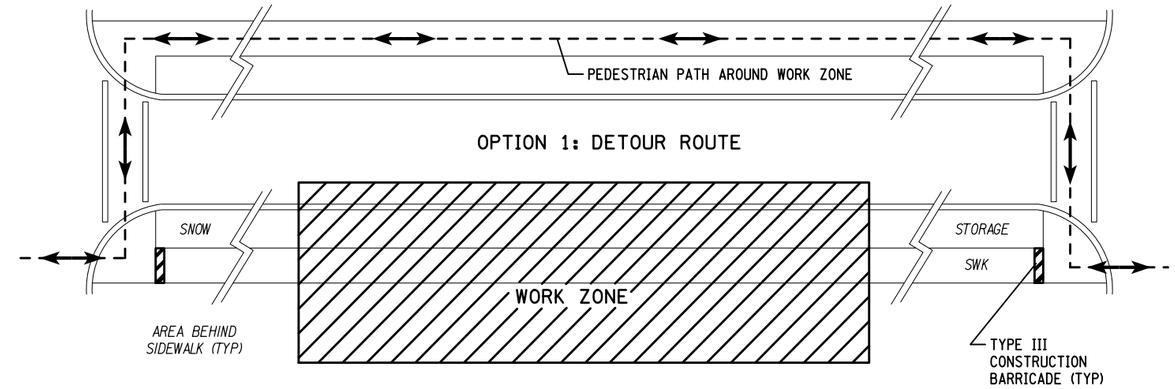

OPTION 2: TEMPORARY PATH - USING AREA BEHIND SIDEWALK

** IF RIGHT-OF-WAY PERMITS **

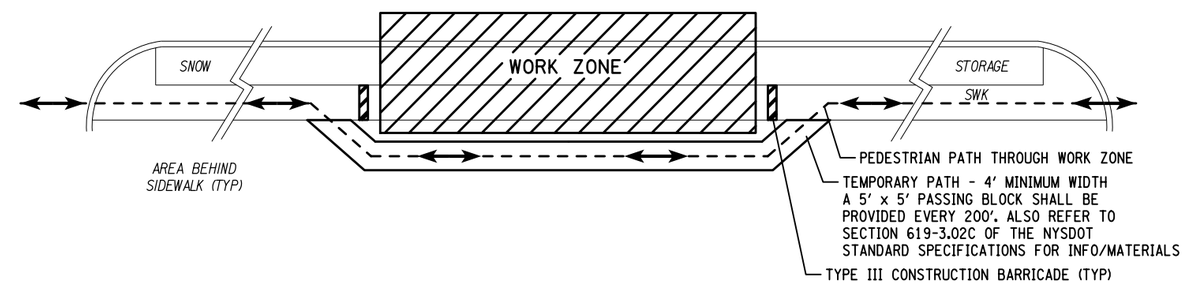

OPTION 3: TEMPORARY PATH - USING SNOW STORAGE

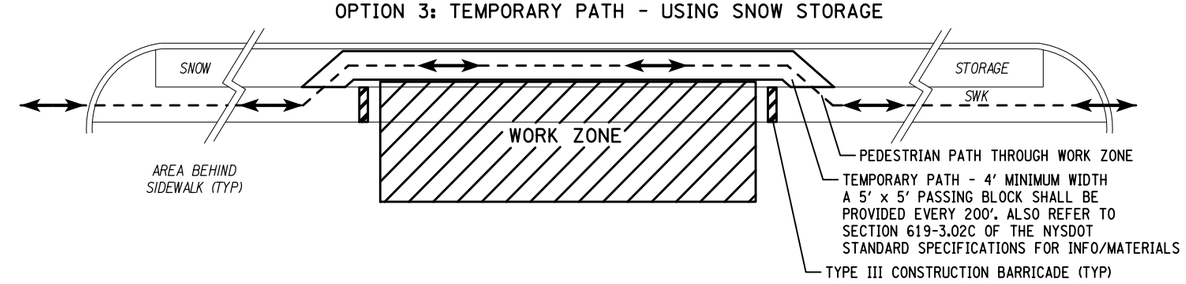

AFFIX SEAL: ON:	ALTERED BY: ON:
D264571 STATE OF NEW YORK ROBERT F. SCHALLER LICENSED PROFESSIONAL ENGINEER NO. 082465	

AS-BUILT REVISIONS DESCRIPTION OF ALTERATIONS:	NY 78, TRANSIT ROAD, S.H. 1334A-1	PIN 5813.61 NY 78 UTILITY QUALITY LEVEL D	BRIDGES	CULVERTS	ALL DIMENSIONS IN ft UNLESS OTHERWISE NOTED	CONTRACT NUMBER D264571
	FRENCH ROAD TO WEHRLE DRIVE				WORK ZONE TYPICALS - SHEET 8	
	TOWNS OF CHEEKTOWAGA & LANCASTER					DRAWING NO. WZT-8
	VILLAGE OF DEPEW					SHEET NO. 56
	COUNTY: ERIE REGION: 05					

IT IS A VIOLATION OF LAW FOR ANY PERSON, UNLESS THEY ARE ACTING UNDER THE DIRECTION OF A LICENSED PROFESSIONAL ENGINEER, ARCHITECT, LANDSCAPE ARCHITECT, OR LAND SURVEYOR, TO ALTER AN ITEM IN ANY WAY. IF AN ITEM BEARING THE STAMP OF A LICENSED PROFESSIONAL IS ALTERED, THE ALTERING ENGINEER, ARCHITECT, LANDSCAPE ARCHITECT, OR LAND SURVEYOR SHALL STAMP THE DOCUMENT AND INCLUDE THE NOTATION "ALTERED BY" FOLLOWED BY THEIR SIGNATURE, THE DATE OF SUCH ALTERATION, AND A SPECIFIC DESCRIPTION OF THE ALTERATION.

NEW YORK STATE OF OPPORTUNITY. Department of Transportation

PROJECT MANAGER S. S. VAIDYA
CHECK R. F. SCHALLER
DRAFTING C. L. CRITES
CHECK R. F. SCHALLER
DESIGN C. L. CRITES
JOB MANAGER R. F. SCHALLER
DESIGN SUPERVISOR S. S. VAIDYA
FILE NAME = 581361_CPH_HWY_WZT-8.dgn
DATE/TIME = 22-JUN-2021 12:35
USER = cartes

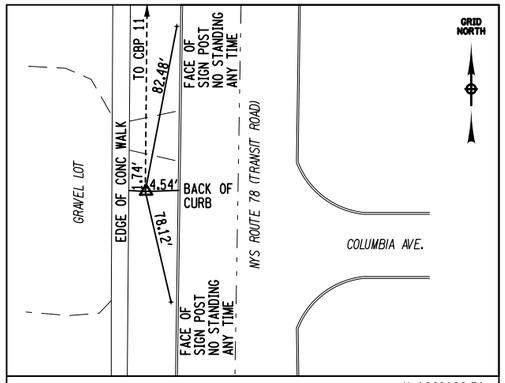

CONTROL POINT #10

CONTROL POINT #10 IS A REBAR WITH "FA" CAP ON THE WEST SIDE OF TRANSIT ROAD, SET BETWEEN THE SIDEWALK AND CURB, ABOUT 40' NORTH OF THE PROJECTED CENTERLINE OF COLUMBIA AVE.

N 1062822.51
E 1117842.36
ELEV 672.81'

VILLAGE: DEPEW

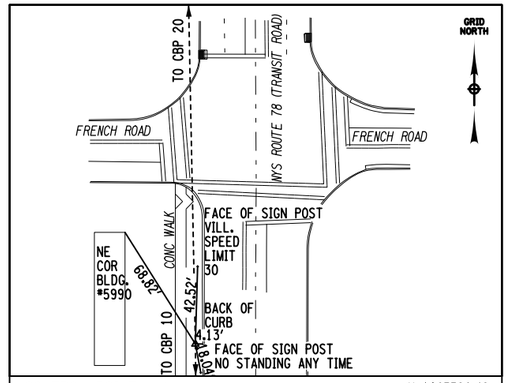

CONTROL POINT #11

CONTROL POINT #11 IS A MAG NAIL SET IN A CONCRETE SIDEWALK SEAM & BLACKTOP PAD, ON THE WEST SIDE OF TRANSIT ROAD, BETWEEN THE SIDEWALK & CURB, ABOUT 110' SOUTH OF THE CENTERLINE OF FRENCH ROAD.

N 1063326.42
E 1117837.65
ELEV 674.94'

VILLAGE: DEPEW

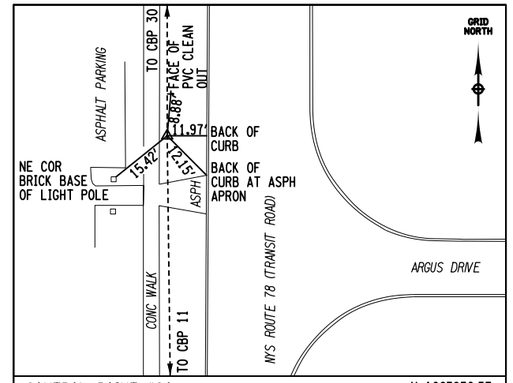

CONTROL POINT #20

CONTROL POINT #20 IS A REBAR WITH "FA" CAP, SET ON THE WEST SIDE OF TRANSIT ROAD, BETWEEN THE SIDEWALK & CURB, ABOUT 60' NORTH OF THE CENTERLINE PROJECTION OF ARGUS DRIVE.

N 1063830.57
E 1117827.58
ELEV 680.11'

VILLAGE: DEPEW

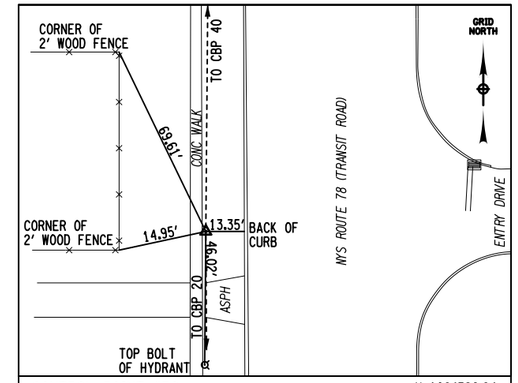

CONTROL POINT #30

CONTROL POINT #30 IS A REBAR WITH "FA" CAP, SET FLUSH WITH THE GROUND, ON THE WEST SIDE OF TRANSIT ROAD, BETWEEN THE SIDEWALK AND CURB, ABOUT 9' SOUTH OF THE PROJECTED CENTERLINE OF ENTRY DRIVE.

N 1064320.94
E 1117824.58
ELEV 679.04'

VILLAGE: DEPEW

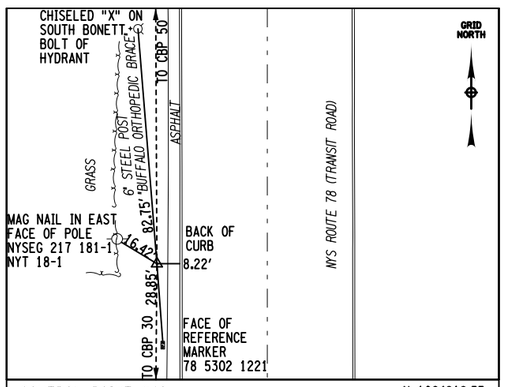

CONTROL POINT #40

CONTROL POINT #40 IS A REBAR WITH "FA" CAP, SET FLUSH WITH THE GROUND, ON THE WEST SIDE OF TRANSIT ROAD, 500' SOUTH OF THE CENTERLINE OF AIRVIEW DRIVE.

N 1064818.53
E 1117828.76
ELEV 680.48'

VILLAGE: DEPEW

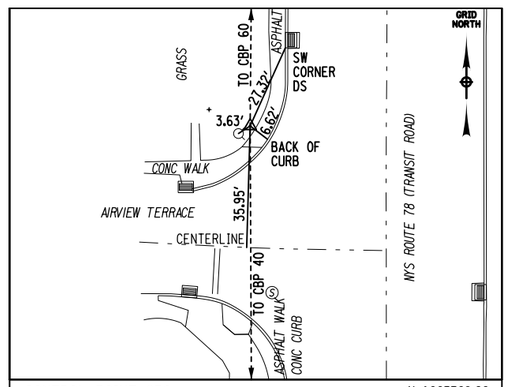

CONTROL POINT #50

CONTROL POINT #50 IS A REBAR WITH "FA" CAP, SET FLUSH WITH THE GROUND, ON THE WEST SIDE OF TRANSIT ROAD, WEST OF THE ASPHALT SIDEWALK IN THE GRASS, ABOUT 36' NORTH OF THE CENTERLINE OF AIRVIEW DRIVE.

N 1065368.29
E 1117826.17
ELEV 681.25'

VILLAGE: DEPEW

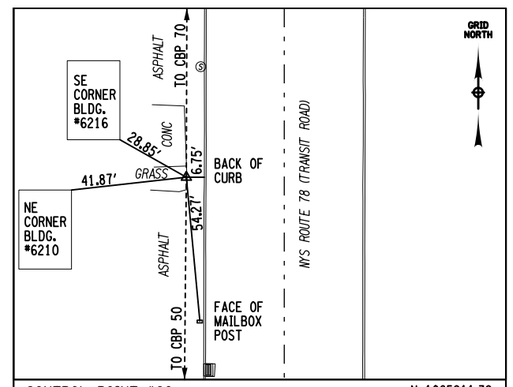

CONTROL POINT #60

CONTROL POINT #60 IS A REBAR WITH "FA" CAP, SET FLUSH WITH THE GROUND, ON THE WEST SIDE OF TRANSIT ROAD, BETWEEN THE ASPHALT SIDEWALK AND RIGHT OF WAY, ABOUT 145' SOUTH OF THE CENTERLINE PROJECTION OF HANDWELL PL.

N 1065911.39
E 1117830.96
ELEV 686.37'

VILLAGE: DEPEW

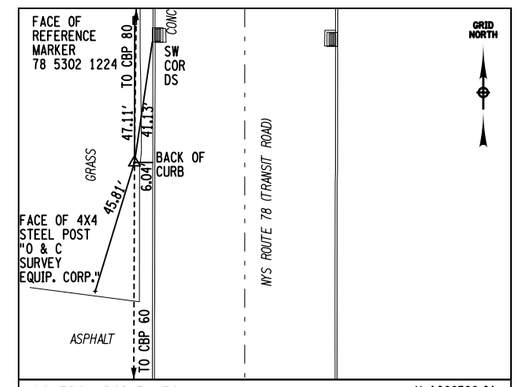

CONTROL POINT #70

CONTROL POINT #70 IS A REBAR WITH "FA" CAP, SET FLUSH WITH THE GROUND, ON THE WEST SIDE OF TRANSIT ROAD, BETWEEN THE ASPHALT SIDEWALK AND RIGHT OF WAY, ABOUT 340' NORTH OF THE CENTERLINE PROJECTION OF HANDWELL PL.

N 1066398.01
E 1117832.50
ELEV 697.92'

VILLAGE: DEPEW

BASELINE SURVEY NOTES

SURVEY METHOD: GPS
COMBINED FACTOR: 0.999938568
HORIZONTAL DATUM: NAD 83 (2011) EPOCH 2010
VERTICAL DATUM: NAVD 88 GNSS GEOID 12A
ZONE: WESTERN

(NO SCALE)

AFFIX SEAL:
ON:

D264571

STATE OF NEW YORK · ROBERT F. SCHALLER · NO. 082465 · LICENSED PROFESSIONAL ENGINEER

ALTERED BY:
ON:

AS-BUILT REVISIONS
DESCRIPTION OF ALTERATIONS:

NY 78, TRANSIT ROAD, S. H. 1334-A-1
FRENCH ROAD TO WEHRLE DRIVE
TOWNS OF CHEEKTOWAGA
VILLAGE OF DEPEW
COUNTY: ERIE REGION: 05

PIN 5813.61
NY 78
UTILITY QUALITY LEVEL D

BRIDGES

CULVERTS

ALL DIMENSIONS IN ft UNLESS OTHERWISE NOTED

BASELINE TIES - SHEET 1 OF 5

CONTRACT NUMBER
D264571

DRAWING NO. BLT-1
SHEET NO. 57

IT IS A VIOLATION OF LAW FOR ANY PERSON, UNLESS THEY ARE ACTING UNDER THE DIRECTION OF A LICENSED PROFESSIONAL ENGINEER, ARCHITECT, LANDSCAPE ARCHITECT, OR LAND SURVEYOR, TO ALTER AN ITEM IN ANY WAY. IF AN ITEM BEARING THE STAMP OF A LICENSED PROFESSIONAL IS ALTERED, THE ALTERING ENGINEER, ARCHITECT, LANDSCAPE ARCHITECT, OR LAND SURVEYOR SHALL STAMP THE DOCUMENT AND INCLUDE THE NOTATION "ALTERED BY" FOLLOWED BY THEIR SIGNATURE, THE DATE OF SUCH ALTERATION, AND A SPECIFIC DESCRIPTION OF THE ALTERATION.

NEW YORK STATE OF OPPORTUNITY. Department of Transportation

DESIGN SUPERVISOR S. S. VAIDYA JOB MANAGER R. F. SCHALLER DESIGN V. M. DINATALE DRAFTING V. M. DINATALE CHECK C. L. CRITES CHECK C. L. CRITES PROJECT MANAGER S. S. VAIDYA

FILE NAME = 581361_CPH_HWY_BLT-1.dgn
DATE/TIME = 22-JUN-2021 12:35
USER = ccrites

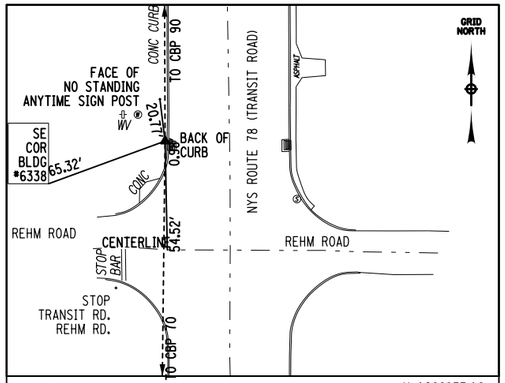

CONTROL POINT #80

CONTROL POINT #80 IS A MAG NAIL, SET IN THE ASPHALT PARKING LOT ON THE WEST SIDE OF TRANSIT ROAD, BETWEEN THE CURB AND RIGHT OF WAY, ABOUT 55' NORTH OF THE CENTERLINE OF REHM RD.

N 1066853.16
E 1117837.80
ELEV 710.57'

VILLAGE: DEPEW

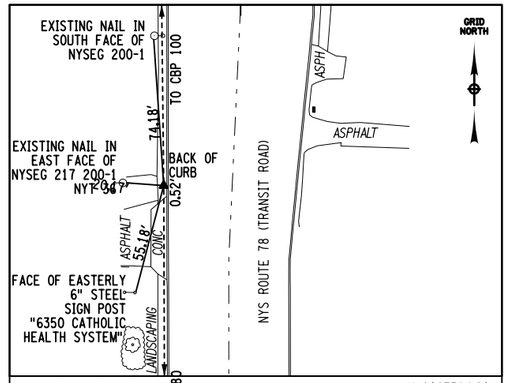

CONTROL POINT #90

CONTROL POINT #90 IS A ERIE COUNTY MONUMENT, STAMPED CHE WNE RESET 1989, SET IN THE CONCRETE SIDEWALK, ON THE WEST SIDE OF TRANSIT ROAD, ABOUT 585' NORTH OF THE CENTERLINE OF REHM RD.

N 1067384.90
E 1117835.90
ELEV 725.31'

TOWN: CHEEKTOWAGA

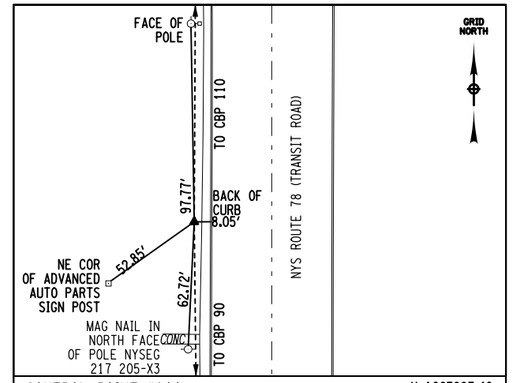

CONTROL POINT #100

CONTROL POINT #100 IS A REBAR WITH "FA" CAP, SET FLUSH WITH THE GROUND, BETWEEN THE SIDEWALK AND THE RIGHT OF WAY, ON THE WEST SIDE OF TRANSIT ROAD, ABOUT 1260' SOUTH OF THE CENTERLINE OF CLOVERLEAF DR.

N 1067887.40
E 1117830.28
ELEV 723.03'

TOWN: CHEEKTOWAGA

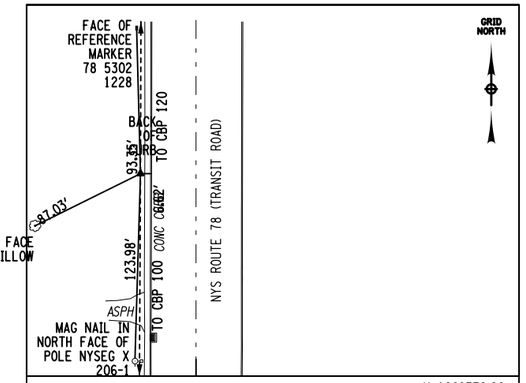

CONTROL POINT #110

CONTROL POINT #110 IS A REBAR WITH "FA" CAP, SET FLUSH WITH THE GROUND, BETWEEN THE CONCRETE SIDEWALK AND THE RIGHT OF WAY, ON THE WEST SIDE OF TRANSIT ROAD, ABOUT 770' SOUTH OF THE CENTERLINE OF CLOVERLEAF DR.

N 1068379.26
E 1117832.81
ELEV 721.07'

TOWN: CHEEKTOWAGA

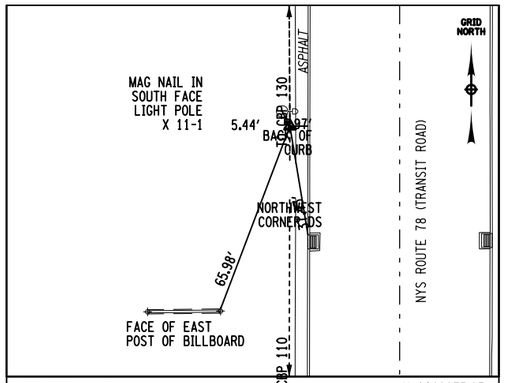

CONTROL POINT #120

CONTROL POINT #120 IS A REBAR WITH "FA" CAP, SET FLUSH WITH THE GROUND, BETWEEN THE CONCRETE SIDEWALK AND THE RIGHT OF WAY, ON THE WEST SIDE OF TRANSIT ROAD, ABOUT 270' SOUTH OF THE CENTERLINE OF CLOVERLEAF DR.

N 1068875.87
E 1117834.27
ELEV 712.63'

TOWN: CHEEKTOWAGA

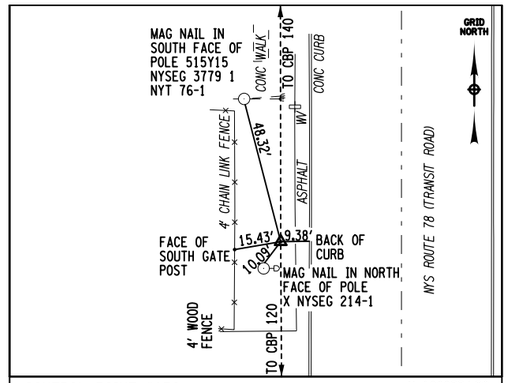

CONTROL POINT #130

CONTROL POINT #130 IS A REBAR WITH "FA" CAP, SET FLUSH WITH THE GROUND, BETWEEN THE CONCRETE SIDEWALK AND RIGHT OF WAY, ON THE WEST SIDE OF TRANSIT ROAD, ABOUT 185' NORTH OF THE CENTERLINE OF CLOVERLEAF DR.

N 1069334.30
E 1117831.45
ELEV 703.35'

TOWN: CHEEKTOWAGA

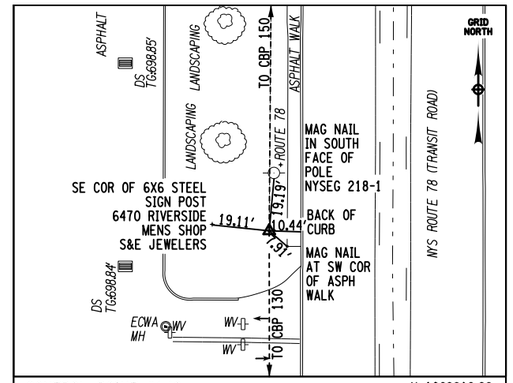

CONTROL POINT #140

CONTROL POINT #140 IS A REBAR WITH "FA" CAP, SET FLUSH WITH THE GROUND, BETWEEN THE CONCRETE SIDEWALK AND THE RIGHT OF WAY, ON THE WEST SIDE OF TRANSIT ROAD, ABOUT 670' NORTH OF THE CENTERLINE OF CLOVERLEAF DR.

N 1069819.28
E 1117830.92
ELEV 698.96'

TOWN: CHEEKTOWAGA

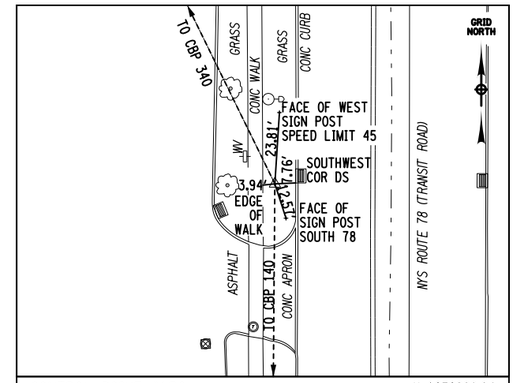

CONTROL POINT #150

CONTROL POINT #150 IS A REBAR WITH "FA" CAP, SET FLUSH WITH THE GROUND, BETWEEN THE CONCRETE SIDEWALK AND THE RIGHT OF WAY, ON THE WEST SIDE OF TRANSIT ROAD, ABOUT 160' SOUTH OF THE CENTERLINE OF GENESEE ST.

N 1070298.94
E 1117834.72
ELEV 697.30'

TOWN: CHEEKTOWAGA

BASELINE SURVEY NOTES

SURVEY METHOD: GPS
COMBINED FACTOR: 0.999938568
HORIZONTAL DATUM: NAD 83 (2011) EPOCH 2010
VERTICAL DATUM: NAVD 88 GNSS GEOID 12A
ZONE: WESTERN

AFFIX SEAL:
ON:

D264571

STATE OF NEW YORK · ROBERT F. SCHALLER · LICENSED PROFESSIONAL ENGINEER · NO. 082465

ALTERED BY:
ON:

(NO SCALE)

AS-BUILT REVISIONS
DESCRIPTION OF ALTERATIONS:

NY 78, TRANSIT ROAD, S. H. 1334-A-1
FRENCH ROAD TO WEHRLE DRIVE
TOWNS OF CHEEKTOWAGA
VILLAGE OF DEPEW
COUNTY: ERIE REGION: 05

PIN 5813.61
NY 78
UTILITY QUALITY LEVEL D

BRIDGES

CULVERTS

ALL DIMENSIONS IN ft UNLESS OTHERWISE NOTED

BASELINE TIES - SHEET 2 OF 5

CONTRACT NUMBER
D264571

DRAWING NO. BLT-2
SHEET NO. 58

IT IS A VIOLATION OF LAW FOR ANY PERSON, UNLESS THEY ARE ACTING UNDER THE DIRECTION OF A LICENSED PROFESSIONAL ENGINEER, ARCHITECT, LANDSCAPE ARCHITECT, OR LAND SURVEYOR, TO ALTER AN ITEM IN ANY WAY. IF AN ITEM BEARING THE STAMP OF A LICENSED PROFESSIONAL IS ALTERED, THE ALTERING ENGINEER, ARCHITECT, LANDSCAPE ARCHITECT, OR LAND SURVEYOR SHALL STAMP THE DOCUMENT AND INCLUDE THE NOTATION "ALTERED BY" FOLLOWED BY THEIR SIGNATURE, THE DATE OF SUCH ALTERATION, AND A SPECIFIC DESCRIPTION OF THE ALTERATION.

NEW YORK STATE OF OPPORTUNITY. Department of Transportation

DESIGN SUPERVISOR S. S. VAIDYA JOB MANAGER R. F. SCHALLER DESIGN V. M. DINATALE CHECK C. L. CRITES DRAFTING V. M. DINATALE CHECK C. L. CRITES PROJECT MANAGER S. S. VAIDYA
FILE NAME = 581361_CPH_HWY_BLT-2.dgn
DATE/TIME = 22-JUN-2021 12:35
USER = ccrites

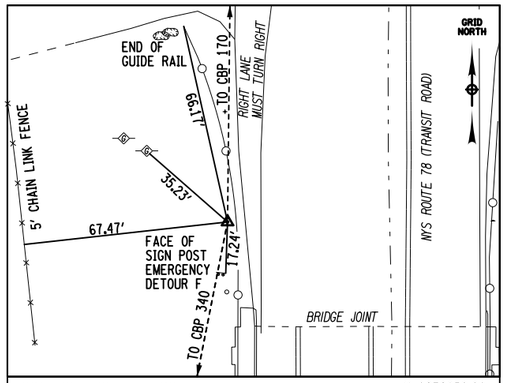

CONTROL POINT #160

N 1070852.21
E 1117819.38
ELEV 700.42'

CONTROL POINT #160 IS A REBAR WITH "FA" CAP, SET FLUSH WITH THE GROUND, BETWEEN THE GUIDE RAIL AND THE RIGHT OF WAY, ON THE WEST SIDE OF TRANSIT ROAD, 390' NORTH OF THE CENTERLINE OF GENESEE ST.

TOWN: CHEEKTOWAGA

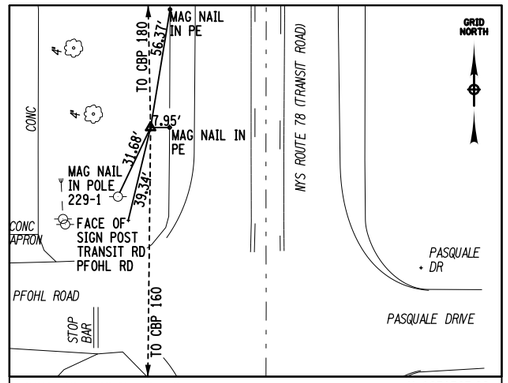

CONTROL POINT #170

N 1071367.99
E 1117825.08
ELEV 698.21'

CONTROL POINT #170 IS A REBAR WITH "FA" CAP, SET FLUSH WITH THE GROUND, ON THE EAST SLOPE OF THE DITCH, BETWEEN THE PAVEMENTS EDGE AND THE RIGHT OF WAY, ON THE WEST SIDE OF TRANSIT ROAD, ABOUT 65' NORTH OF THE CENTERLINE OF PFOHL DR.

TOWN: CHEEKTOWAGA

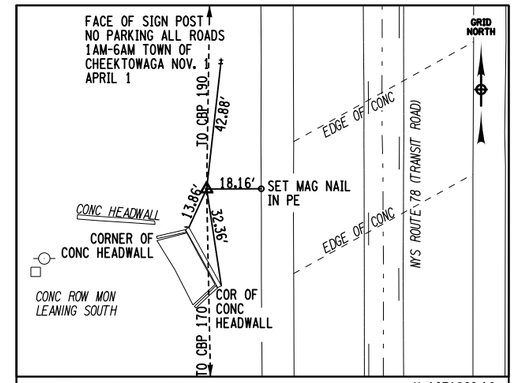

CONTROL POINT #180

N 1071862.16
E 1117815.09
ELEV 698.41'

CONTROL POINT #180 IS A REBAR WITH "FA" CAP, SET FLUSH WITH THE GROUND, BETWEEN THE PAVEMENTS EDGE AND THE RIGHT OF WAY, ON THE WEST SIDE OF TRANSIT ROAD, ABOUT 550' NORTH OF THE CENTERLINE OF PFOHL DR.

TOWN: CHEEKTOWAGA

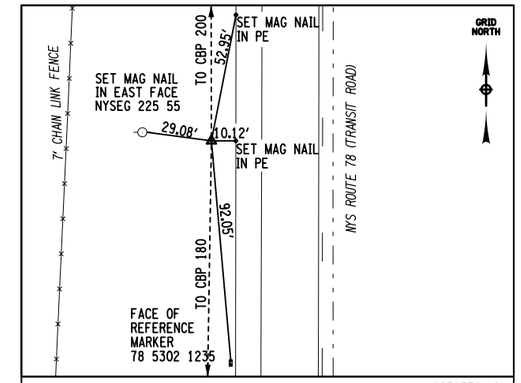

CONTROL POINT #190

N 1072359.86
E 1117823.05
ELEV 697.62'

CONTROL POINT #190 IS A REBAR WITH "FA" CAP, SET FLUSH WITH THE GROUND, BETWEEN THE PAVEMENTS EDGE AND THE RIGHT OF WAY, ON THE WEST SIDE OF TRANSIT ROAD, ABOUT 600' SOUTH OF THE CENTERLINE OF AERO DR.

TOWN: CHEEKTOWAGA

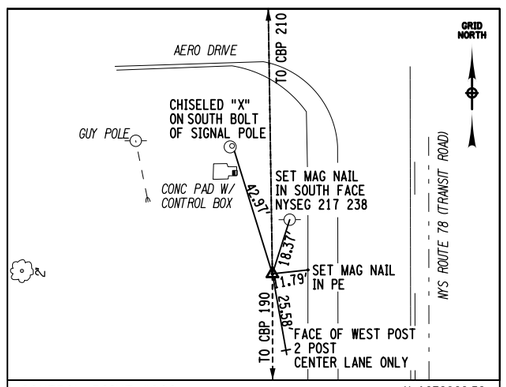

CONTROL POINT #200

N 1072866.52
E 1117821.90
ELEV 698.70'

CONTROL POINT #200 IS A REBAR WITH "FA" CAP, SET FLUSH WITH THE GROUND, BETWEEN THE PAVEMENTS EDGE AND THE RIGHT OF WAY, ON THE WEST SIDE OF TRANSIT ROAD, ABOUT 95' SOUTH OF THE CENTERLINE OF AERO DR.

TOWN: CHEEKTOWAGA

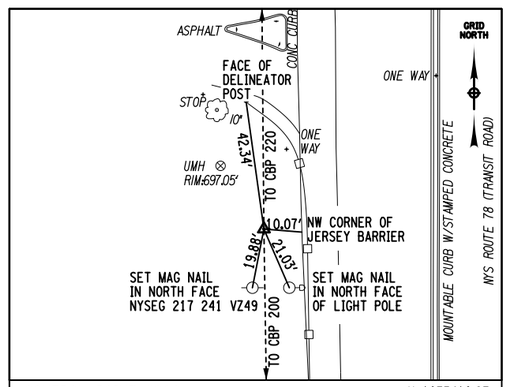

CONTROL POINT #210

N 1073410.27
E 1117813.36
ELEV 698.07'

CONTROL POINT #210 IS A REBAR WITH "FA" CAP, SET FLUSH WITH THE GROUND, BETWEEN THE GUIDE RAIL AND THE RIGHT OF WAY, ON THE WEST SIDE OF TRANSIT ROAD, ABOUT 65' SOUTH OF THE CENTERLINE TO THE EXIT OF THE PARK & RIDE.

TOWN: CHEEKTOWAGA

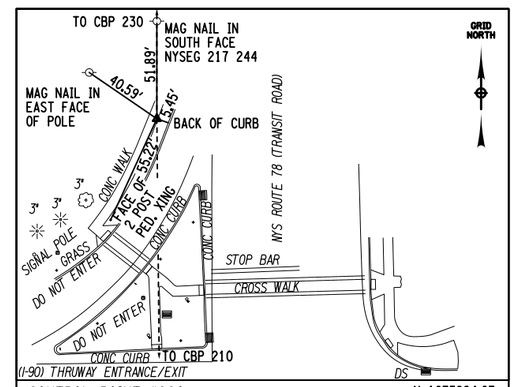

CONTROL POINT #220

N 1073924.07
E 1117808.83
ELEV 700.61'

CONTROL POINT #220 IS A MAG NAIL SET IN THE CONCRETE SIDEWALK SEAM, ON THE WEST SIDE OF TRANSIT ROAD, ABOUT 150' NORTH OF THE CENTERLINE OF THE 1-90 ON/OFF RAMP.

TOWN: CHEEKTOWAGA

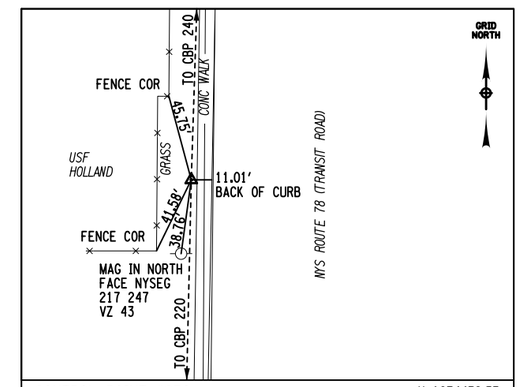

CONTROL POINT #230

N 1074432.53
E 1117816.55
ELEV 697.87'

CONTROL POINT #230 IS A REBAR WITH "FA" CAP, SET FLUSH WITH THE GROUND, BETWEEN THE CONCRETE SIDEWALK AND FENCE, ON THE WEST SIDE OF TRANSIT ROAD, ABOUT 320' SOUTH OF THE SOUTHERLY OVERHANG OF THE I-90 BRIDGE.

TOWN: AMHERST

BASELINE SURVEY NOTES

SURVEY METHOD: GPS
COMBINED FACTOR: 0.999938568
HORIZONTAL DATUM: NAD 83 (2011) EPOCH 2010
VERTICAL DATUM: NAVD 88 GNSS GEOID 12A
ZONE: WESTERN

(NO SCALE)

AFFIX SEAL:
ON:

ALTERED BY:
ON:

D264571

STATE OF NEW YORK · ROBERT F. SCHALLER · LICENSED PROFESSIONAL ENGINEER · NO. 082465

AS-BUILT REVISIONS
DESCRIPTION OF ALTERATIONS:

NY 78, TRANSIT ROAD, S. H. 1334-A-1
FRENCH ROAD TO WEHRLE DRIVE
TOWNS OF CHEEKTOWAGA
VILLAGE OF DEPEW
COUNTY: ERIE REGION: 05

PIN 5813.61
NY 78
UTILITY QUALITY LEVEL D

BRIDGES

CULVERTS

ALL DIMENSIONS IN ft UNLESS OTHERWISE NOTED

BASELINE TIES - SHEET 3 OF 5

CONTRACT NUMBER
D264571

DRAWING NO. BLT-3
SHEET NO. 59

IT IS A VIOLATION OF LAW FOR ANY PERSON, UNLESS THEY ARE ACTING UNDER THE DIRECTION OF A LICENSED PROFESSIONAL ENGINEER, ARCHITECT, LANDSCAPE ARCHITECT, OR LAND SURVEYOR, TO ALTER AN ITEM IN ANY WAY. IF AN ITEM BEARING THE STAMP OF A LICENSED PROFESSIONAL IS ALTERED, THE ALTERING ENGINEER, ARCHITECT, LANDSCAPE ARCHITECT, OR LAND SURVEYOR SHALL STAMP THE DOCUMENT AND INCLUDE THE NOTATION "ALTERED BY" FOLLOWED BY THEIR SIGNATURE, THE DATE OF SUCH ALTERATION, AND A SPECIFIC DESCRIPTION OF THE ALTERATION.

NEW YORK STATE OF OPPORTUNITY. Department of Transportation

DESIGN SUPERVISOR S. S. VAIDYA JOB MANAGER R. F. SCHALLER DESIGN V. M. DINATALE CHECK C. L. CRITES DRAFTING V. M. DINATALE CHECK C. L. CRITES PROJECT MANAGER S. S. VAIDYA

FILE NAME = 581361_CPH_HWY_BLT-3.dgn
DATE/TIME = 22-JUN-2021 12:35
USER = crites

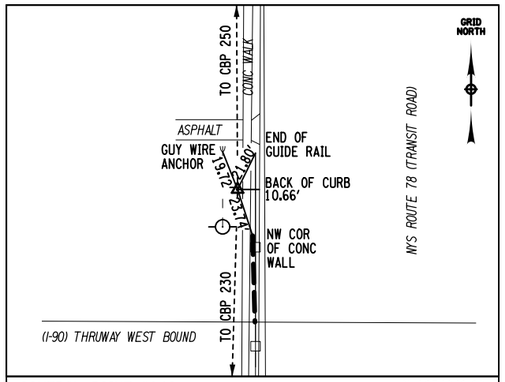

CONTROL POINT #240

N 1074940.68
E 1117829.28
ELEV 699.40'

CONTROL POINT *240 IS A REBAR WITH "FA" CAP, SET FLUSH WITH THE GROUND, BETWEEN THE CONCRETE SIDEWALK AND RIGHT OF WAY, ON THE WEST SIDE OF TRANSIT ROAD, ABOUT 65' NORTH OF THE NORTHERLY OVERHANG OF THE I-90 BRIDGE.

TOWN: AMHERST

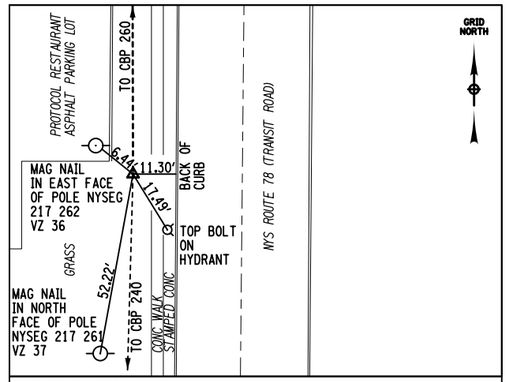

CONTROL POINT #250

N 1075425.40
E 1117822.25
ELEV 702.20'

CONTROL POINT *250 IS A REBAR WITH "FA" CAP, SET FLUSH WITH THE GROUND, BETWEEN THE CONCRETE SIDEWALK AND THE RIGHT OF WAY, ON THE WEST SIDE OF TRANSIT ROAD, ABOUT 330' SOUTH OF THE CENTERLINE OF FREEMAN RD.

TOWN: AMHERST

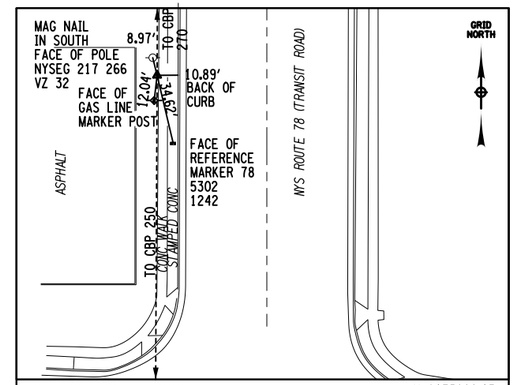

CONTROL POINT #260

N 1075922.03
E 1117824.58
ELEV 704.00'

CONTROL POINT *260 IS A REBAR WITH "FA" CAP, SET FLUSH THE GROUND, BETWEEN THE CONCRETE SIDEWALK AND THE RIGHT OF WAY, ON THE WEST SIDE OF TRANSIT ROAD, ABOUT 165' NORTH OF THE CENTERLINE OF FREEMAN RD.

TOWN: AMHERST

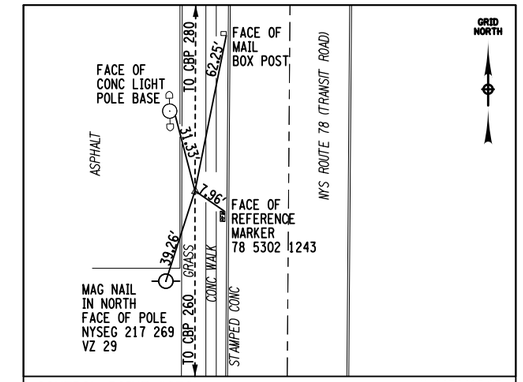

CONTROL POINT #270

N 1076415.97
E 1117826.71
ELEV 703.40

CONTROL POINT *270 IS A REBAR WITH "FA" CAP, SET FLUSH WITH THE GROUND, BETWEEN THE CONCRETE SIDEWALK AND THE RIGHT OF WAY, ON THE WEST SIDE OF TRANSIT ROAD, ABOUT 660' NORTH OF THE CENTERLINE OF FREEMAN RD.

TOWN: AMHERST

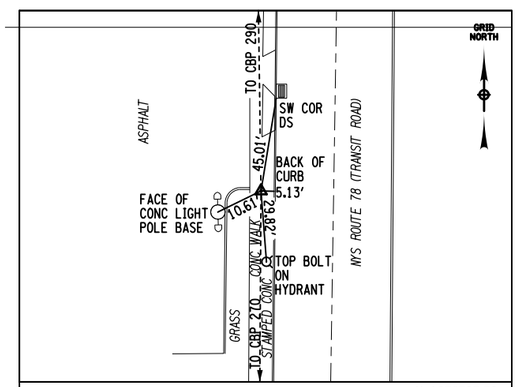

CONTROL POINT #280

N 1076785.58
E 1117827.59
ELEV 702.29'

CONTROL POINT *280 IS A MAG NAIL, SET IN THE SEAM OF A CONCRETE SIDEWALK WITH A STAMPED CONCRETE SIDEWALK, ON THE WEST SIDE OF TRANSIT ROAD, ABOUT 700' SOUTH OF THE CENTERLINE OF WEHRLE DR.

TOWN: AMHERST

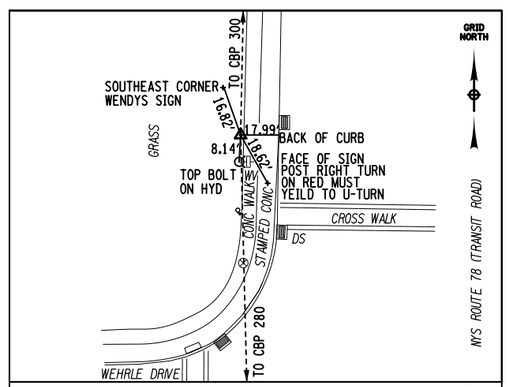

CONTROL POINT #290

N 1077317.67
E 1117814.25
ELEV 704.98'

CONTROL POINT *290 IS A REBAR WITH "FA" CAP, SET FLUSH WITH THE GROUND, BETWEEN THE CONCRETE SIDEWALK AND THE RIGHT OF WAY, ON THE WEST SIDE OF TRANSIT ROAD, ABOUT 85' NORTH OF THE CENTERLINE OF WEHRLE DR.

TOWN: AMHERST

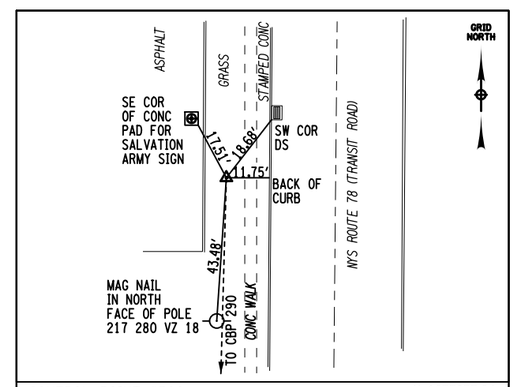

CONTROL POINT #300

N 1077837.94
E 1117825.22
ELEV 707.66'

CONTROL POINT *300 IS A REBAR WITH "FA" CAP, SET FLUSH WITH THE GROUND, BETWEEN THE CONCRETE SIDEWALK AND THE RIGHT OF WAY, ON THE WEST SIDE OF TRANSIT ROAD, ABOUT 600' NORTH OF THE CENTERLINE OF WEHRLE DR.

TOWN: AMHERST

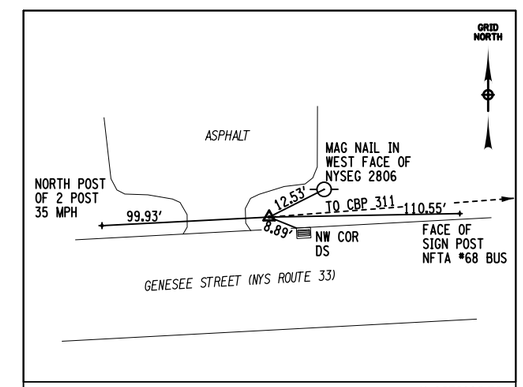

CONTROL POINT #310

N 1070119.76
E 1115743.21
ELEV 708.40'

CONTROL POINT *310 IS A REBAR WITH "FA" CAP, SET FLUSH WITH THE GROUND, BETWEEN THE CURB AND THE RIGHT OF WAY, ON THE NORTH SIDE OF GENESEE ST, ABOUT 2150' WEST OF THE CENTERLINE OF TRANSIT RD.

TOWN: CHEEKTOWAGA

BASELINE SURVEY NOTES

SURVEY METHOD: GPS
COMBINED FACTOR: 0.999938568
HORIZONTAL DATUM: NAD 83 (2011) EPOCH 2010
VERTICAL DATUM: NAVD 88 GNSS GEOID 12A
ZONE: WESTERN

(NO SCALE)

AFFIX SEAL:
ON:

ALTERED BY:
ON:

D264571
STATE OF NEW YORK
ROBERT F. SCHALLER
LICENSED PROFESSIONAL ENGINEER
NO. 082465

AS-BUILT REVISIONS
DESCRIPTION OF ALTERATIONS:

NY 78, TRANSIT ROAD, S.H. 1334A-1
FRENCH ROAD TO WEHRLE DRIVE
TOWNS OF CHEEKTOWAGA & LANCASTER
VILLAGE OF DEPEW
COUNTY: ERIE REGION: 05

PIN 5813.61
NY 78

BRIDGES

CULVERTS

ALL DIMENSIONS IN ft UNLESS OTHERWISE NOTED

BASELINE TIES - SHEET 4 OF 5

CONTRACT NUMBER
D264571

DRAWING NO. BLT-4
SHEET NO. 60

IT IS A VIOLATION OF LAW FOR ANY PERSON, UNLESS THEY ARE ACTING UNDER THE DIRECTION OF A LICENSED PROFESSIONAL ENGINEER, ARCHITECT, LANDSCAPE ARCHITECT, OR LAND SURVEYOR, TO ALTER AN ITEM IN ANY WAY. IF AN ITEM BEARING THE STAMP OF A LICENSED PROFESSIONAL IS ALTERED, THE ALTERING ENGINEER, ARCHITECT, LANDSCAPE ARCHITECT, OR LAND SURVEYOR SHALL STAMP THE DOCUMENT AND INCLUDE THE NOTATION "ALTERED BY" FOLLOWED BY THEIR SIGNATURE, THE DATE OF SUCH ALTERATION, AND A SPECIFIC DESCRIPTION OF THE ALTERATION.

NEW YORK STATE OF OPPORTUNITY. Department of Transportation

DESIGN SUPERVISOR S. S. VAIDYA JOB MANAGER R. F. SCHALLER DESIGN V. M. DINATALE CHECK R. F. SCHALLER DRAFTING V. M. DINATALE CHECK R. F. SCHALLER PROJECT MANAGER S. S. VAIDYA

FILE NAME = 581361_CPH_HWY_BLT-4.dgn
DATE/TIME = 22-JUN-2021 12:35
USER = ccrites

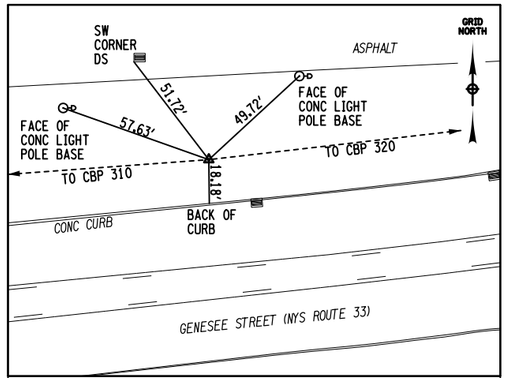

CONTROL POINT #311

N 1070155.09
E 1116224.63
ELEV 700.20'

CONTROL POINT #311 IS A REBAR WITH "FA" CAP, SET FLUSH WITH THE GROUND, BETWEEN THE CURB AND THE RIGHT OF WAY, ON THE NORTH SIDE OF GENESEE ST., ABOUT 1650' WEST OF TRANSIT RD.

TOWN: CHEEKTOWAGA

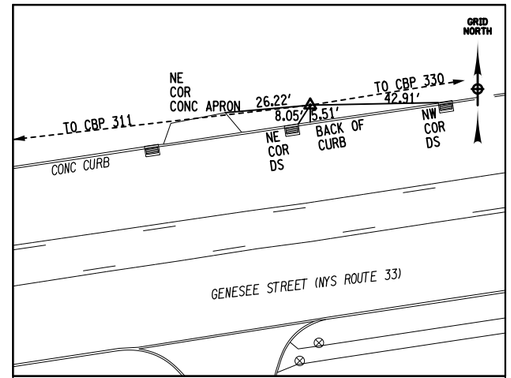

CONTROL POINT #320

N 1070214.86
E 1116741.35
ELEV 697.83'

CONTROL POINT #320 IS A REBAR WITH "FA" CAP, SET FLUSH WITH THE GROUND, BETWEEN THE CURB AND RIGHT OF WAY, ON THE NORTH SIDE OF GENESEE ST., ABOUT 1130' WEST OF THE CENTERLINE OF TRANSIT RD.

TOWN: CHEEKTOWAGA

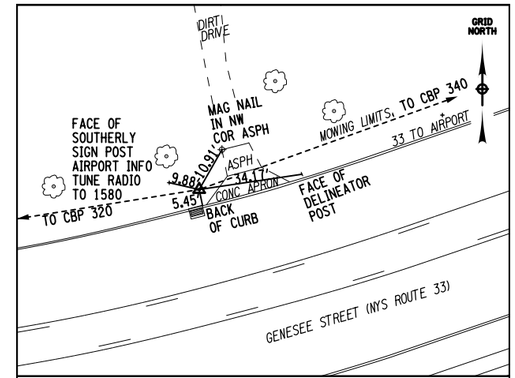

CONTROL POINT #330

N 1070292.76
E 1117226.04
ELEV 699.68'

CONTROL POINT #330 IS A REBAR WITH "FA" CAP, SET FLUSH WITH THE GROUND, BETWEEN THE CURB AND THE RIGHT OF WAY, ON THE NORTH SIDE OF GENESEE ST., ABOUT 645' WEST OF THE CENTERLINE OF TRANSIT RD.

TOWN: CHEEKTOWAGA

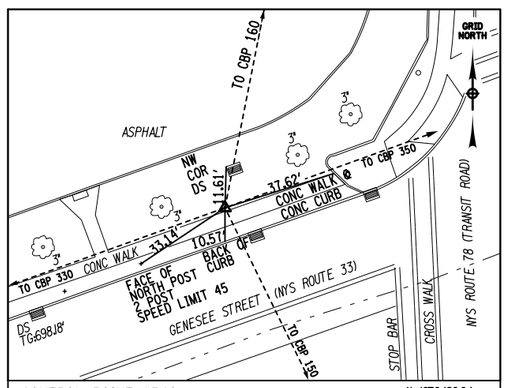

CONTROL POINT #340

N 1070480.04
E 1117745.91
ELEV 698.76'

CONTROL POINT #340 IS A REBAR WITH "FA" CAP, SET FLUSH WITH THE GROUND, BETWEEN THE CONCRETE SIDEWALK AND THE RIGHT OF WAY, ON THE NORTH SIDE OF GENESEE ST., ABOUT 125' WEST OF THE CENTERLINE OF TRANSIT RD.

TOWN: CHEEKTOWAGA

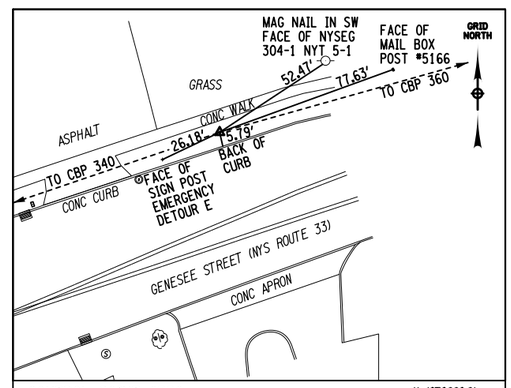

CONTROL POINT #350

N 1070660.61
E 1118275.48
ELEV 701.51'

CONTROL POINT #350 IS A REBAR WITH "FA" CAP, SET FLUSH WITH THE GROUND, BETWEEN THE CURB AND THE CONCRETE SIDEWALK, ON THE NORTH SIDE OF GENESEE ST., ABOUT 400' EAST OF THE CENTERLINE OF TRANSIT RD.

TOWN: LANCASTER

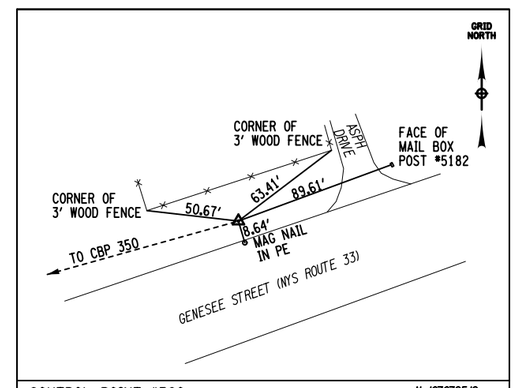

CONTROL POINT #360

N 1070795.19
E 1118754.59
ELEV 704.57'

CONTROL POINT #360 IS A REBAR WITH "FA" CAP, SET FLUSH WITH THE GROUND, BETWEEN THE PAVEMENT EDGE AND THE RIGHT OF WAY, ON THE NORTH SIDE OF GENESEE ST., ABOUT 880' EAST OF THE CENTERLINE OF TRANSIT RD.

TOWN: LANCASTER

BASELINE SURVEY NOTES

SURVEY METHOD: GPS
COMBINED FACTOR: 0.999938568
HORIZONTAL DATUM: NAD 83 (2011) EPOCH 2010
VERTICAL DATUM: NAVD 88 GNSS GEOID 12A
ZONE: WESTERN

(NO SCALE)

AFFIX SEAL: ON:	ALTERED BY: ON:
D264571 STATE OF NEW YORK ROBERT F. SCHALLER NO. 082465 LICENSED PROFESSIONAL ENGINEER	

AS-BUILT REVISIONS DESCRIPTION OF ALTERATIONS:	NY 78, TRANSIT ROAD, S.H. 1334A-1	PIN 5813.61 NY 78	BRIDGES	CULVERTS	ALL DIMENSIONS IN ft UNLESS OTHERWISE NOTED	CONTRACT NUMBER D264571
	FRENCH ROAD TO WEHRLE DRIVE				BASELINE TIES - SHEET 5 OF 5	DRAWING NO. BLT-5
	TOWNS OF CHEEKTOWAGA & LANCASTER					SHEET NO. 61
	VILLAGE OF DEPEW					
	COUNTY: ERIE REGION: 05					

IT IS A VIOLATION OF LAW FOR ANY PERSON, UNLESS THEY ARE ACTING UNDER THE DIRECTION OF A LICENSED PROFESSIONAL ENGINEER, ARCHITECT, LANDSCAPE ARCHITECT, OR LAND SURVEYOR, TO ALTER AN ITEM IN ANY WAY. IF AN ITEM BEARING THE STAMP OF A LICENSED PROFESSIONAL IS ALTERED, THE ALTERING ENGINEER, ARCHITECT, LANDSCAPE ARCHITECT, OR LAND SURVEYOR SHALL STAMP THE DOCUMENT AND INCLUDE THE NOTATION "ALTERED BY" FOLLOWED BY THEIR SIGNATURE, THE DATE OF SUCH ALTERATION, AND A SPECIFIC DESCRIPTION OF THE ALTERATION.

NEW YORK STATE OF OPPORTUNITY. Department of Transportation

DESIGN SUPERVISOR S. S. VAIDYA JOB MANAGER R. F. SCHALLER DESIGN V. M. DINATALE CHECK R. F. SCHALLER DRAFTING V. M. DINATALE CHECK R. F. SCHALLER PROJECT MANAGER S. S. VAIDYA

FILE NAME = 581361_CPH_HWY_BLT-5.dgn
DATE/TIME = 22-JUN-2021 12:35
USER = cortes

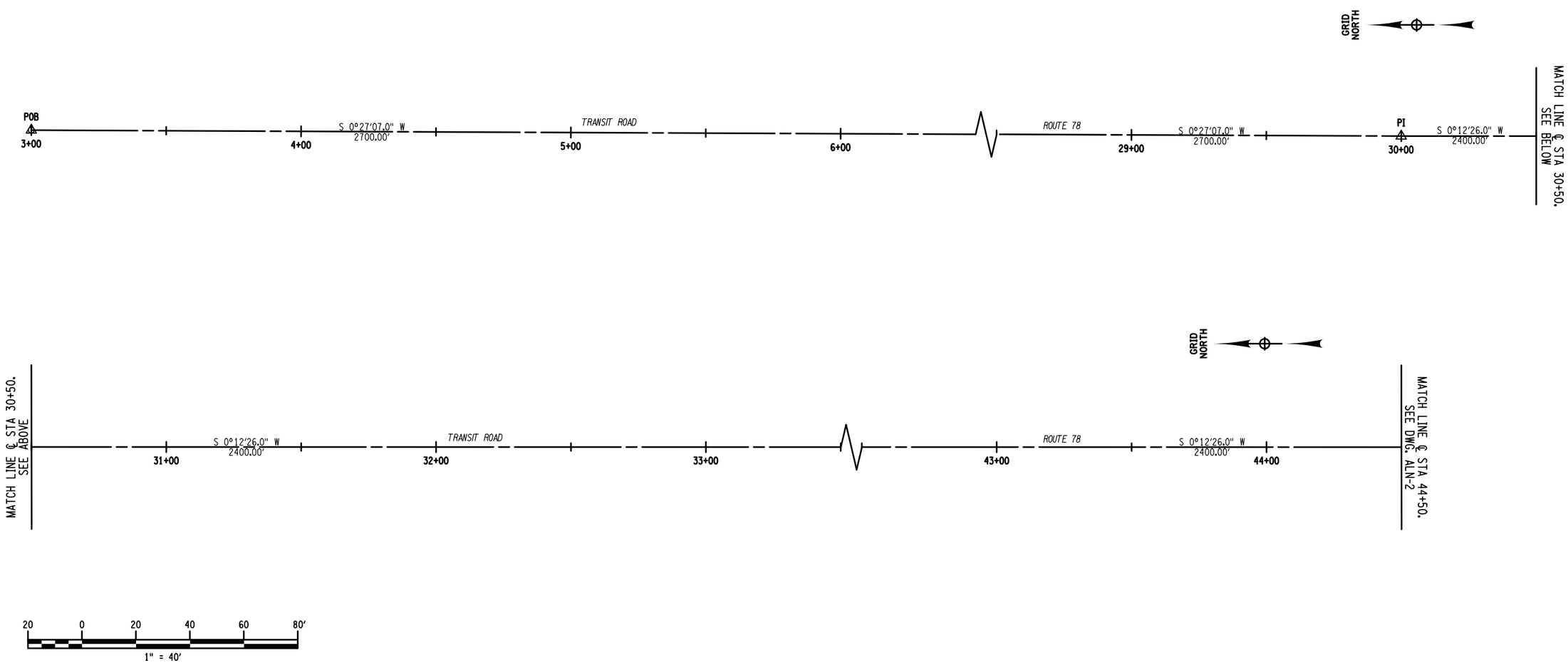

AFFIX SEAL: ON:	ALTERED BY: ON:
D264571 STATE OF NEW YORK ROBERT F. SCHALLER NO. 082465 LICENSED PROFESSIONAL ENGINEER	

SURVEY NOTES:
BASELINE & CENTERLINE HORIZONTAL CONTROL
CF=0.999938568
DATUM: NAD 83 (2011) EPOCH 2010

AS-BUILT REVISIONS DESCRIPTION OF ALTERATIONS:	NY 78, TRANSIT ROAD, S.H. 1334A-1	PIN 5813.61 NY 78	BRIDGES	CULVERTS	ALL DIMENSIONS IN ft UNLESS OTHERWISE NOTED	CONTRACT NUMBER D264571
	FRENCH ROAD TO WEHRLE DRIVE				ALIGNMENT PLAN STA 3+00 TO STA 44+50	DRAWING NO. ALN-1
	TOWNS OF CHEEKTOWAGA & LANCASTER					SHEET NO. 62
	VILLAGE OF DEPEW					
	COUNTY: ERIE REGION: 05					

IT IS A VIOLATION OF LAW FOR ANY PERSON, UNLESS THEY ARE ACTING UNDER THE DIRECTION OF A LICENSED PROFESSIONAL ENGINEER, ARCHITECT, LANDSCAPE ARCHITECT, OR LAND SURVEYOR, TO ALTER AN ITEM IN ANY WAY. IF AN ITEM BEARING THE STAMP OF A LICENSED PROFESSIONAL IS ALTERED, THE ALTERING ENGINEER, ARCHITECT, LANDSCAPE ARCHITECT, OR LAND SURVEYOR SHALL STAMP THE DOCUMENT AND INCLUDE THE NOTATION "ALTERED BY" FOLLOWED BY THEIR SIGNATURE, THE DATE OF SUCH ALTERATION, AND A SPECIFIC DESCRIPTION OF THE ALTERATION.

NEW YORK STATE OF OPPORTUNITY. Department of Transportation

DESIGN SUPERVISOR S. S. VAIDYA JOB MANAGER R. F. SCHALLER DESIGN V. M. DINATALE CHECK R. F. SCHALLER DRAFTING V. M. DINATALE CHECK R. F. SCHALLER PROJECT MANAGER S. S. VAIDYA

FILE NAME = 581361_CPH_HWY_ALN-1.dgn
DATE/TIME = 22-JUN-2021 12:35
USER = ccrites

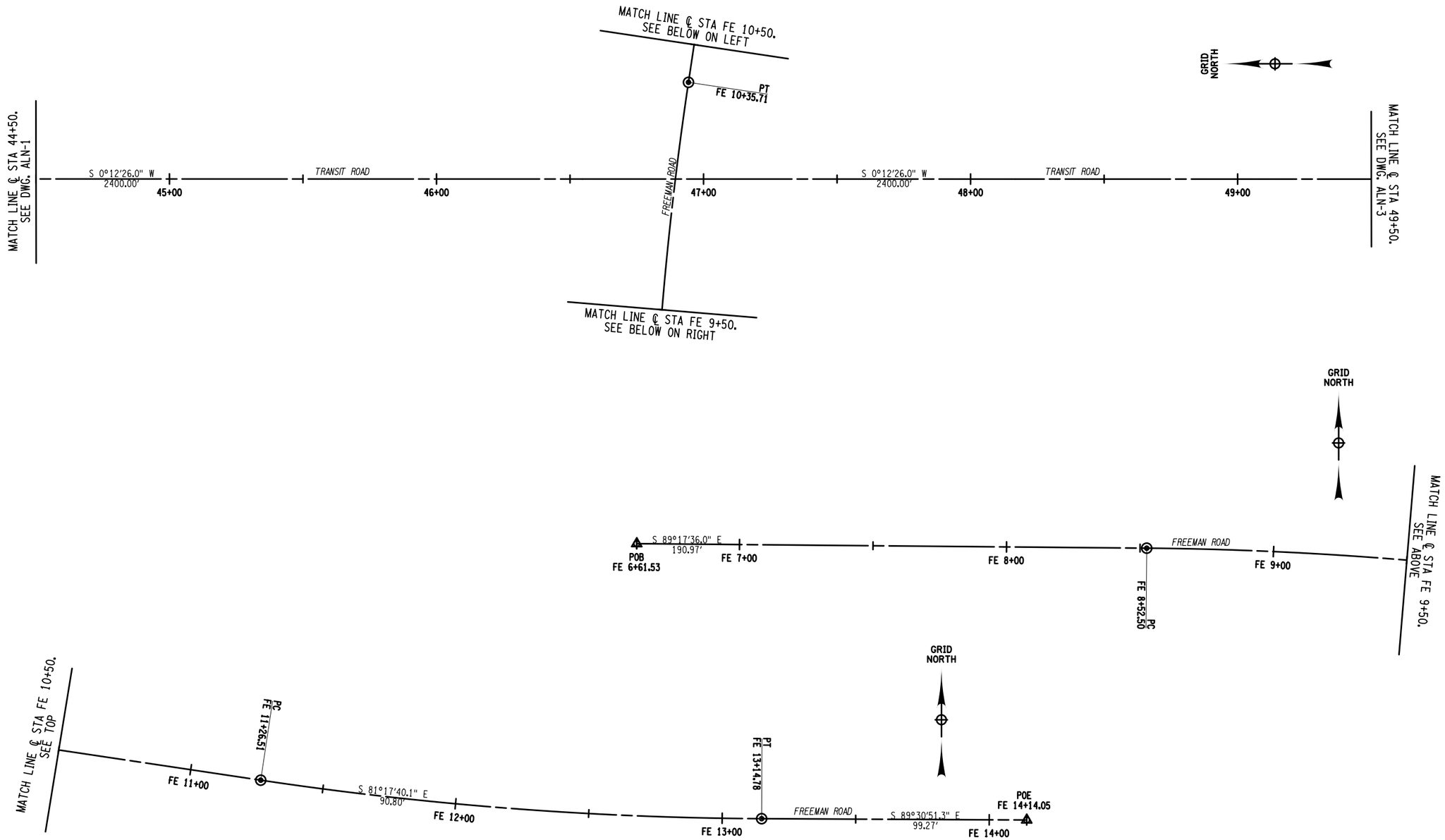

20 0 20 40 60 80'

1" = 40'

SURVEY NOTES:
BASELINE & CENTERLINE HORIZONTAL CONTROL
CF- 0.999938568
DATUM: NAD 83 (2011) EPOCH 2010

AFFIX SEAL: ON:	ALTERED BY: ON:
D264571 STATE OF NEW YORK ROBERT F. SCHALLER NO. 082465 LICENSED PROFESSIONAL ENGINEER	

AS-BUILT REVISIONS DESCRIPTION OF ALTERATIONS:	NY 78, TRANSIT ROAD, S.H. 1334A-1 FRENCH ROAD TO WEHRLE DRIVE TOWNS OF CHEEKTOWAGA & LANCASTER VILLAGE OF DEPEW COUNTY: ERIE REGION: 05	PIN 5813.61 NY 78	BRIDGES	CULVERTS	ALL DIMENSIONS IN ft UNLESS OTHERWISE NOTED ALIGNMENT PLAN STA 44+50 TO STA 49+50	CONTRACT NUMBER D264571 DRAWING NO. ALN-2 SHEET NO. 63

IT IS A VIOLATION OF LAW FOR ANY PERSON, UNLESS THEY ARE ACTING UNDER THE DIRECTION OF A LICENSED PROFESSIONAL ENGINEER, ARCHITECT, LANDSCAPE ARCHITECT, OR LAND SURVEYOR, TO ALTER AN ITEM IN ANY WAY. IF AN ITEM BEARING THE STAMP OF A LICENSED PROFESSIONAL IS ALTERED, THE ALTERING ENGINEER, ARCHITECT, LANDSCAPE ARCHITECT, OR LAND SURVEYOR SHALL STAMP THE DOCUMENT AND INCLUDE THE NOTATION "ALTERED BY" FOLLOWED BY THEIR SIGNATURE, THE DATE OF SUCH ALTERATION, AND A SPECIFIC DESCRIPTION OF THE ALTERATION.

NEW YORK STATE OF OPPORTUNITY. Department of Transportation

DESIGN SUPERVISOR S. S. VAIDYA | JOB MANAGER R. F. SCHALLER | DESIGN V. M. DINATALE | DRAFTING V. M. DINATALE | CHECK R. F. SCHALLER | CHECK R. F. SCHALLER | PROJECT MANAGER S. S. VAIDYA

FILE NAME = 581361_CPH_HWY_ALN-2.dgn
DATE/TIME = 22-JUN-2021 12:35
USER = cortes

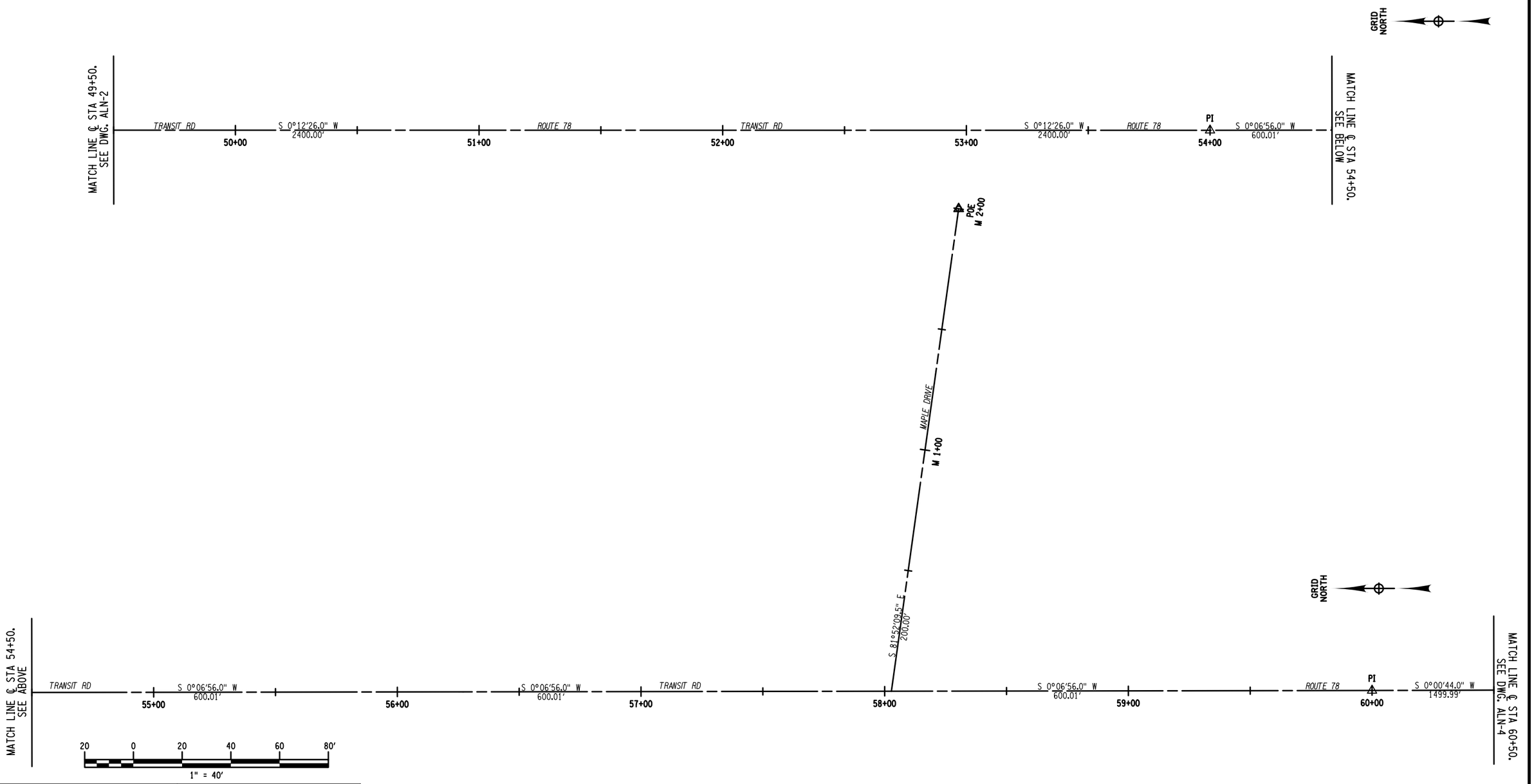

AFFIX SEAL: ON:	ALTERED BY: ON:
D264571 STATE OF NEW YORK ROBERT F. SCHALLER LICENSED PROFESSIONAL ENGINEER NO. 082465	

SURVEY NOTES:
BASELINE & CENTERLINE HORIZONTAL CONTROL
CF= 0.999938568
DATUM: NAD 83 (2011) EPOCH 2010

AS-BUILT REVISIONS DESCRIPTION OF ALTERATIONS:	NY 78, TRANSIT ROAD, S.H. 1334A-1	PIN 5813.61 NY 78	BRIDGES	CULVERTS	ALL DIMENSIONS IN ft UNLESS OTHERWISE NOTED	CONTRACT NUMBER D264571
	FRENCH ROAD TO WEHRLE DRIVE				ALIGNMENT PLAN STA 49+50 TO STA 60+50	DRAWING NO. ALN-3
	TOWNS OF CHEEKTOWAGA & LANCASTER					SHEET NO. 64
	VILLAGE OF DEPEW					
	COUNTY: ERIE REGION: 05					

IT IS A VIOLATION OF LAW FOR ANY PERSON, UNLESS THEY ARE ACTING UNDER THE DIRECTION OF A LICENSED PROFESSIONAL ENGINEER, ARCHITECT, LANDSCAPE ARCHITECT, OR LAND SURVEYOR, TO ALTER AN ITEM IN ANY WAY. IF AN ITEM BEARING THE STAMP OF A LICENSED PROFESSIONAL IS ALTERED, THE ALTERING ENGINEER, ARCHITECT, LANDSCAPE ARCHITECT, OR LAND SURVEYOR SHALL STAMP THE DOCUMENT AND INCLUDE THE NOTATION "ALTERED BY" FOLLOWED BY THEIR SIGNATURE, THE DATE OF SUCH ALTERATION, AND A SPECIFIC DESCRIPTION OF THE ALTERATION.

NEW YORK STATE OF OPPORTUNITY. Department of Transportation

PROJECT MANAGER S. S. VAIDYA
CHECK R. F. SCHALLER
DRAFTING V. M. DINATALE
CHECK R. F. SCHALLER
DESIGN V. M. DINATALE
JOB MANAGER R. F. SCHALLER
DESIGN SUPERVISOR S. S. VAIDYA
FILE NAME = 581361_CPH.HWY.ALN-3.dgn
DATE/TIME = 22-JUN-2021 12:35
USER = corites

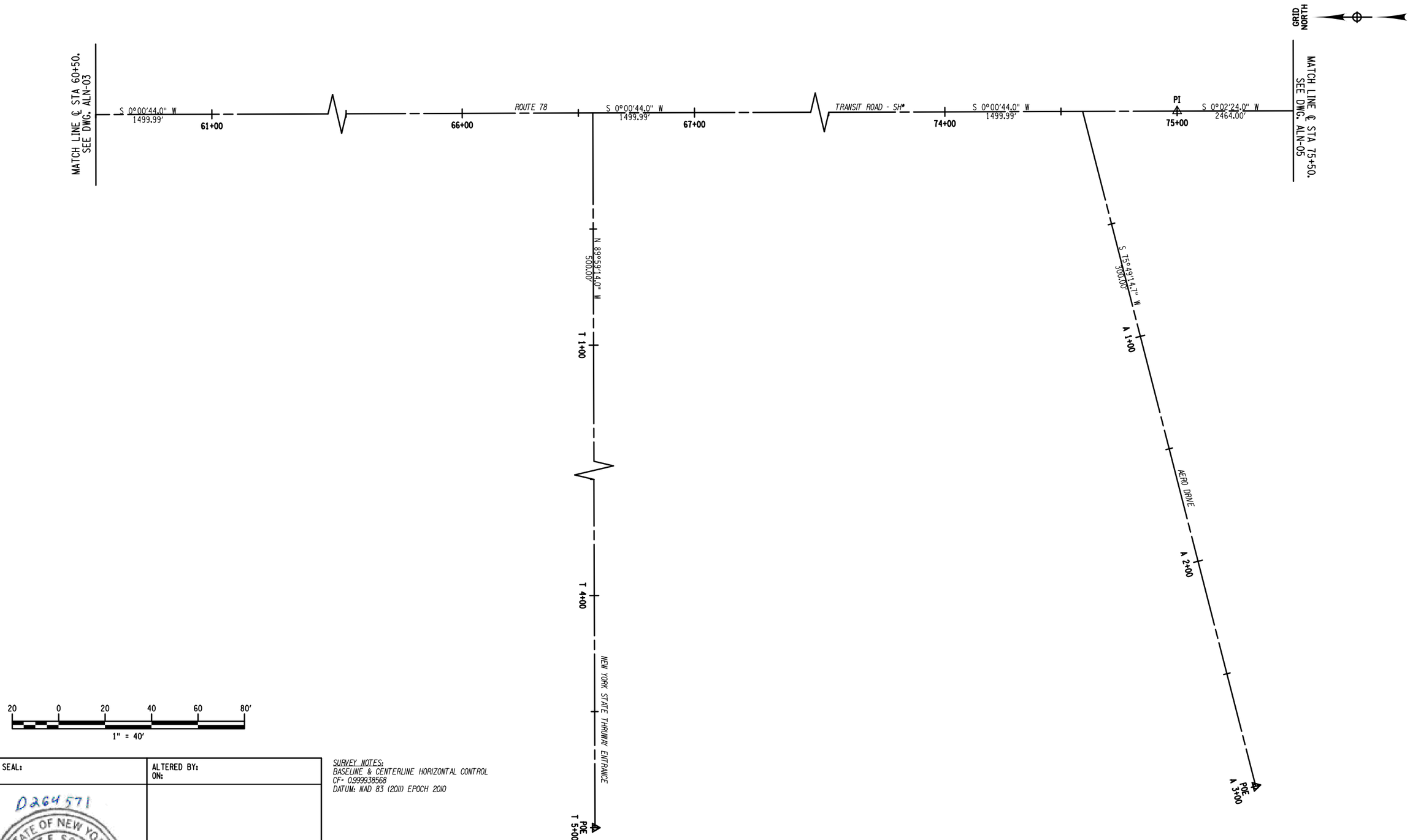

SURVEY NOTES:
BASELINE & CENTERLINE HORIZONTAL CONTROL
CF= 0.999938568
DATUM: NAD 83 (2011) EPOCH 2010

AFFIX SEAL:
ON:

D264571

STATE OF NEW YORK
ROBERT F. SCHALLER
LICENSED PROFESSIONAL ENGINEER
NO. 082465

ALTERED BY:
ON:

AS-BUILT REVISIONS
DESCRIPTION OF ALTERATIONS:

NY 78, TRANSIT ROAD, S.H. 1334A-1	PIN 5813.61	BRIDGES	CULVERTS	ALL DIMENSIONS IN ft UNLESS OTHERWISE NOTED
FRENCH ROAD TO WEHRLE DRIVE	NY 78			ALIGNMENT PLAN
TOWNS OF CHEEKTOWAGA & LANCASTER				STA 60+50 TO STA 75+50
VILLAGE OF DEPEW				
COUNTY: ERIE REGION: 05				

CONTRACT NUMBER
D264571

DRAWING NO. ALN-4
SHEET NO. 65

IT IS A VIOLATION OF LAW FOR ANY PERSON, UNLESS THEY ARE ACTING UNDER THE DIRECTION OF A LICENSED PROFESSIONAL ENGINEER, ARCHITECT, LANDSCAPE ARCHITECT, OR LAND SURVEYOR, TO ALTER AN ITEM IN ANY WAY. IF AN ITEM BEARING THE STAMP OF A LICENSED PROFESSIONAL IS ALTERED, THE ALTERING ENGINEER, ARCHITECT, LANDSCAPE ARCHITECT, OR LAND SURVEYOR SHALL STAMP THE DOCUMENT AND INCLUDE THE NOTATION "ALTERED BY" FOLLOWED BY THEIR SIGNATURE, THE DATE OF SUCH ALTERATION, AND A SPECIFIC DESCRIPTION OF THE ALTERATION.

NEW YORK STATE OF OPPORTUNITY. Department of Transportation

DESIGN SUPERVISOR S. S. VAIDYA JOB MANAGER R. F. SCHALLER DESIGN V. M. DINATALE CHECK R. F. SCHALLER DRAFTING V. M. DINATALE CHECK R. F. SCHALLER PROJECT MANAGER S. S. VAIDYA

FILE NAME = 581361_CPH_HWY_ALN-4.dgn
DATE/TIME = 22-JUN-2021 12:35
USER = corrtes

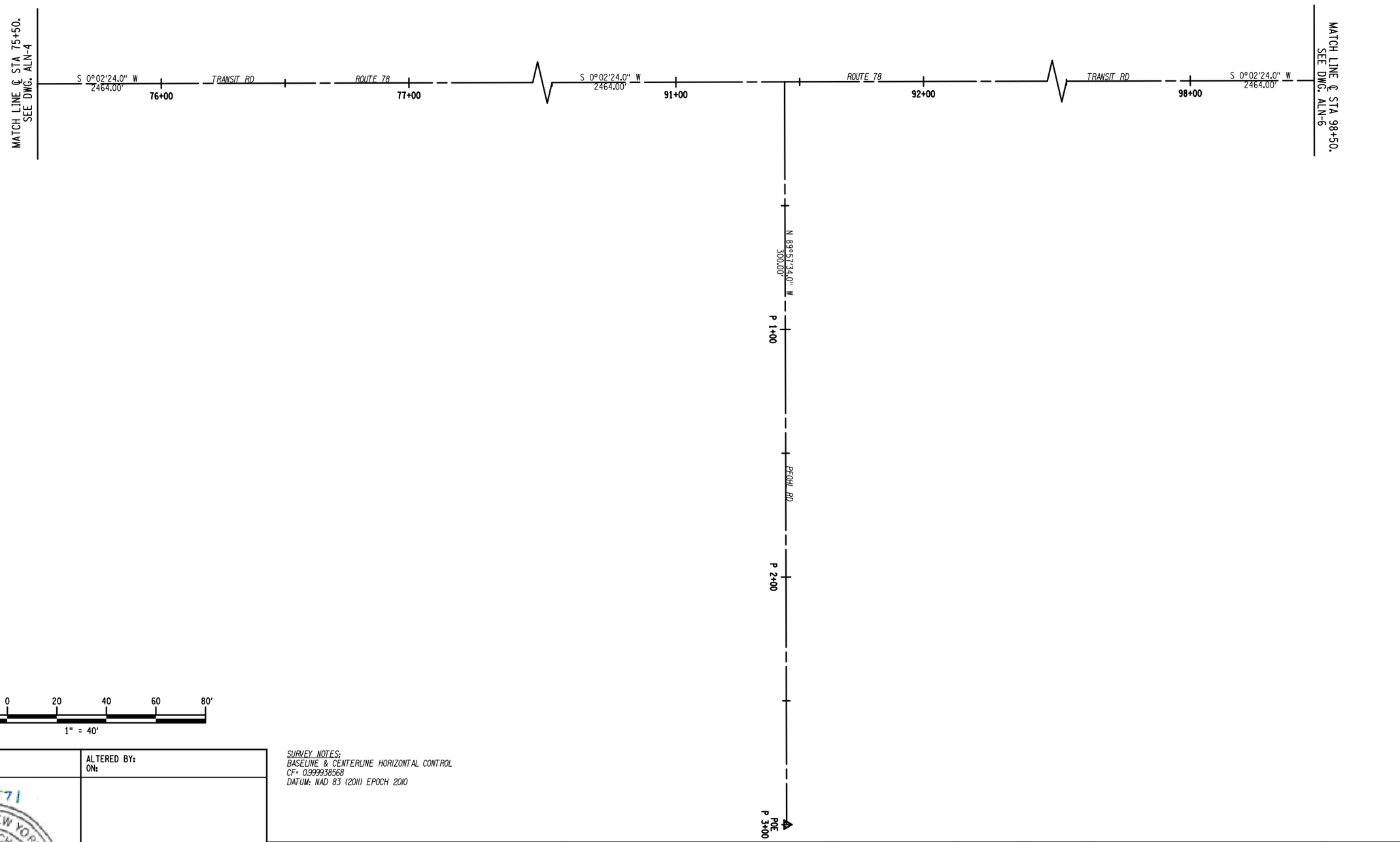

SURVEY NOTES:
BASELINE & CENTERLINE HORIZONTAL CONTROL
CF= 0.999938568
DATUM: NAD 83 (2011) EPOCH 2010

AFFIX SEAL: ON:	ALTERED BY: ON:
D264571 STATE OF NEW YORK ROBERT F. SCHALLER NO. 082465 LICENSED PROFESSIONAL ENGINEER	

AS-BUILT REVISIONS DESCRIPTION OF ALTERATIONS:	NY 78, TRANSIT ROAD, S.H. 1334A-1	PIN 5813.61 NY 78	BRIDGES	CULVERTS	ALL DIMENSIONS IN ft UNLESS OTHERWISE NOTED	CONTRACT NUMBER D264571
	FRENCH ROAD TO WEHRLE DRIVE				ALIGNMENT PLAN STA 75+50 TO 98+50	DRAWING NO. ALN-5
	TOWNS OF CHEEKTOWAGA & LANCASTER					SHEET NO. 66
	VILLAGE OF DEPEW					
	COUNTY: ERIE REGION: 05					

IT IS A VIOLATION OF LAW FOR ANY PERSON, UNLESS THEY ARE ACTING UNDER THE DIRECTION OF A LICENSED PROFESSIONAL ENGINEER, ARCHITECT, LANDSCAPE ARCHITECT, OR LAND SURVEYOR, TO ALTER AN ITEM IN ANY WAY. IF AN ITEM BEARING THE STAMP OF A LICENSED PROFESSIONAL IS ALTERED, THE ALTERING ENGINEER, ARCHITECT, LANDSCAPE ARCHITECT, OR LAND SURVEYOR SHALL STAMP THE DOCUMENT AND INCLUDE THE NOTATION "ALTERED BY" FOLLOWED BY THEIR SIGNATURE, THE DATE OF SUCH ALTERATION, AND A SPECIFIC DESCRIPTION OF THE ALTERATION.

NEW YORK STATE OF OPPORTUNITY. Department of Transportation

DESIGN SUPERVISOR S. S. VAIDYA JOB MANAGER R. F. SCHALLER DESIGN V. M. DINATALE CHECK R. F. SCHALLER DRAFTING V. M. DINATALE CHECK R. F. SCHALLER PROJECT MANAGER S. S. VAIDYA
FILE NAME = 581361_CPH_HWY_ALN-5.dgn
DATE/TIME = 22-JUN-2021 12:35
USER = cortes

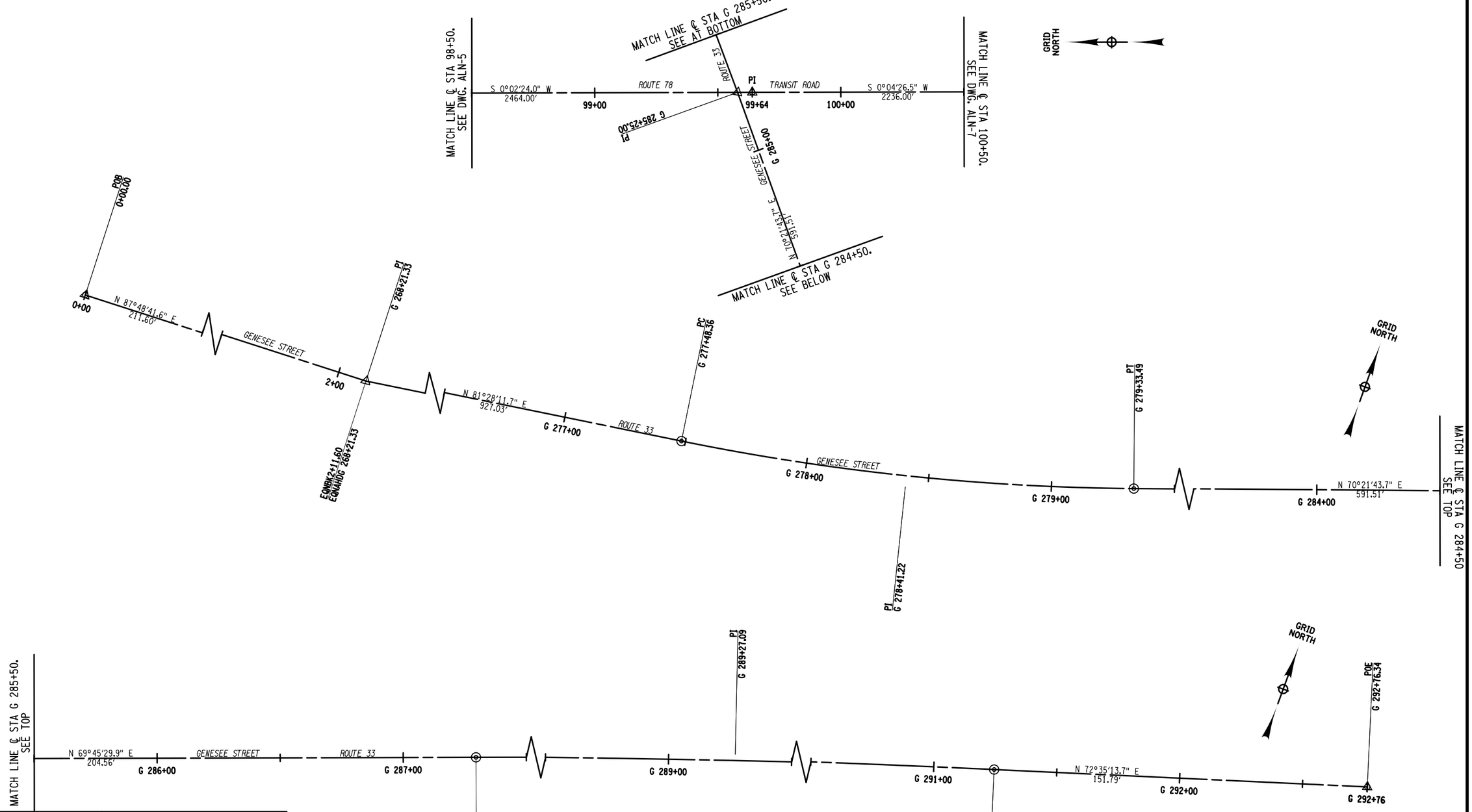

SURVEY NOTES:
BASELINE & CENTERLINE HORIZONTAL CONTROL
CF= 0.999938568
DATUM: NAD 83 (2011) EPOCH 2010

AFFIX SEAL: ON:	ALTERED BY: ON:
D264571 STATE OF NEW YORK ROBERT F. SCHALLER NO. 082465 LICENSED PROFESSIONAL ENGINEER	

AS-BUILT REVISIONS
DESCRIPTION OF ALTERATIONS:

NY 78, TRANSIT ROAD, S.H. 1334A-1
FRENCH ROAD TO WEHRLE DRIVE
TOWNS OF CHEEKTOWAGA & LANCASTER
VILLAGE OF DEPEW
COUNTY: ERIE REGION: 05

PIN 5813.61
NY 78

BRIDGES

CULVERTS

ALL DIMENSIONS IN ft UNLESS OTHERWISE NOTED

ALIGNMENT PLAN
SHEET 6

CONTRACT NUMBER
D264571

DRAWING NO. ALN-6
SHEET NO. 67

IT IS A VIOLATION OF LAW FOR ANY PERSON, UNLESS THEY ARE ACTING UNDER THE DIRECTION OF A LICENSED PROFESSIONAL ENGINEER, ARCHITECT, LANDSCAPE ARCHITECT, OR LAND SURVEYOR, TO ALTER AN ITEM IN ANY WAY. IF AN ITEM BEARING THE STAMP OF A LICENSED PROFESSIONAL IS ALTERED, THE ALTERING ENGINEER, ARCHITECT, LANDSCAPE ARCHITECT, OR LAND SURVEYOR SHALL STAMP THE DOCUMENT AND INCLUDE THE NOTATION "ALTERED BY" FOLLOWED BY THEIR SIGNATURE, THE DATE OF SUCH ALTERATION, AND A SPECIFIC DESCRIPTION OF THE ALTERATION.

NEW YORK STATE OF OPPORTUNITY. Department of Transportation

DESIGN SUPERVISOR S. S. VAIDYA JOB MANAGER R. F. SCHALLER DESIGN V. M. DINATALE CHECK R. F. SCHALLER DRAFTING V. M. DINATALE CHECK R. F. SCHALLER PROJECT MANAGER S. S. VAIDYA

FILE NAME = 581361_CPH_HWY_ALN-6.dgn
DATE/TIME = 22-JUN-2021 12:35
USER = cortes

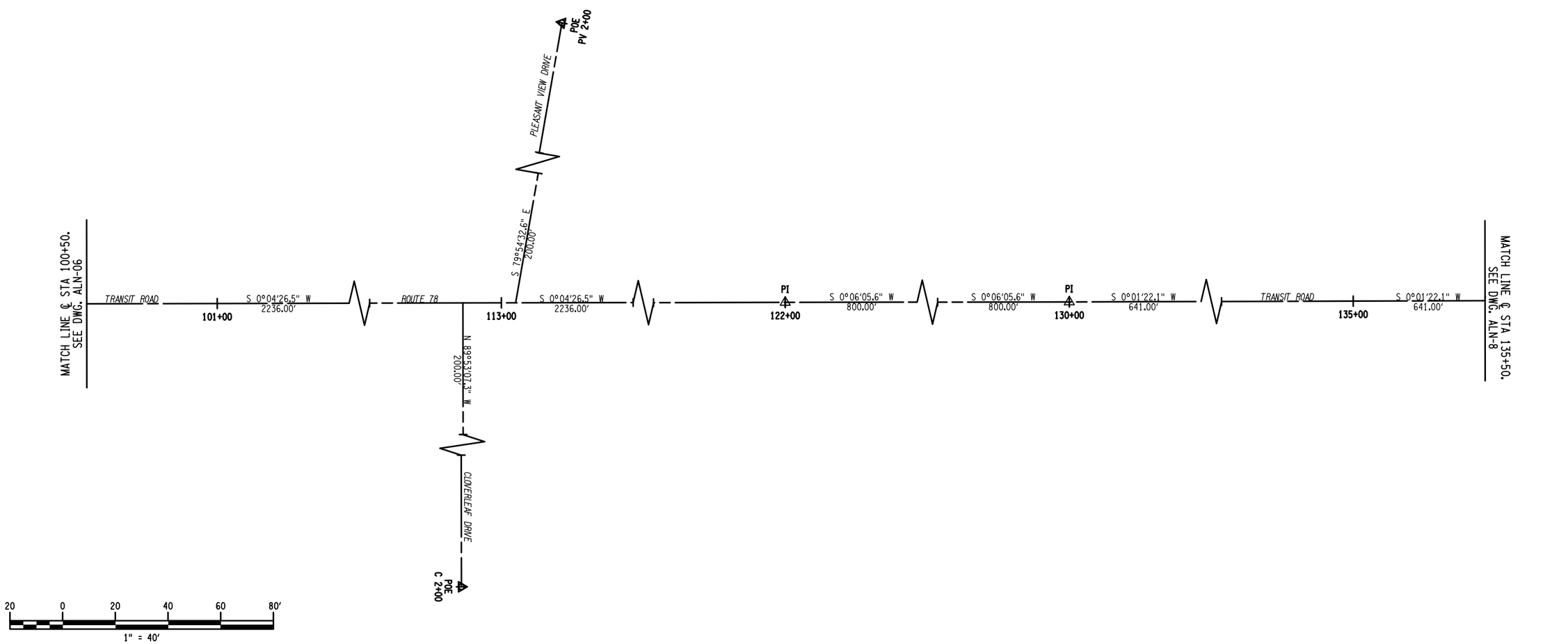

AFFIX SEAL: ON:	ALTERED BY: ON:
D264571 STATE OF NEW YORK ROBERT F. SCHALLER LICENSED PROFESSIONAL ENGINEER NO. 082465	

SURVEY NOTES:
BASELINE & CENTERLINE HORIZONTAL CONTROL
CF= 0.999938568
DATUM: NAD 83 (2011) EPOCH 2010

AS-BUILT REVISIONS DESCRIPTION OF ALTERATIONS:	NY 78, TRANSIT ROAD, S.H. 1334A-1	PIN 5813.61 NY 78	BRIDGES	CULVERTS	ALL DIMENSIONS IN ft UNLESS OTHERWISE NOTED	CONTRACT NUMBER D264571
	FRENCH ROAD TO WEHRLE DRIVE				ALIGNMENT PLAN STA 100+50 TO STA 135+50	DRAWING NO. ALN-7
	TOWNS OF CHEEKTOWAGA & LANCASTER					SHEET NO. 68
	VILLAGE OF DEPEW					
	COUNTY: ERIE REGION: 05					

IT IS A VIOLATION OF LAW FOR ANY PERSON, UNLESS THEY ARE ACTING UNDER THE DIRECTION OF A LICENSED PROFESSIONAL ENGINEER, ARCHITECT, LANDSCAPE ARCHITECT, OR LAND SURVEYOR, TO ALTER AN ITEM IN ANY WAY. IF AN ITEM BEARING THE STAMP OF A LICENSED PROFESSIONAL IS ALTERED, THE ALTERING ENGINEER, ARCHITECT, LANDSCAPE ARCHITECT, OR LAND SURVEYOR SHALL STAMP THE DOCUMENT AND INCLUDE THE NOTATION "ALTERED BY" FOLLOWED BY THEIR SIGNATURE, THE DATE OF SUCH ALTERATION, AND A SPECIFIC DESCRIPTION OF THE ALTERATION.

NEW YORK STATE OF OPPORTUNITY. Department of Transportation

DESIGN SUPERVISOR S. S. VAIDYA JOB MANAGER R. F. SCHALLER DESIGN V. M. DINATALE CHECK R. F. SCHALLER DRAFTING V. M. DINATALE CHECK R. F. SCHALLER PROJECT MANAGER S. S. VAIDYA

FILE NAME = 581361_CPH_HWY_ALN-7.dgn
DATE/TIME = 22-JUN-2021 12:35
USER = ccrites

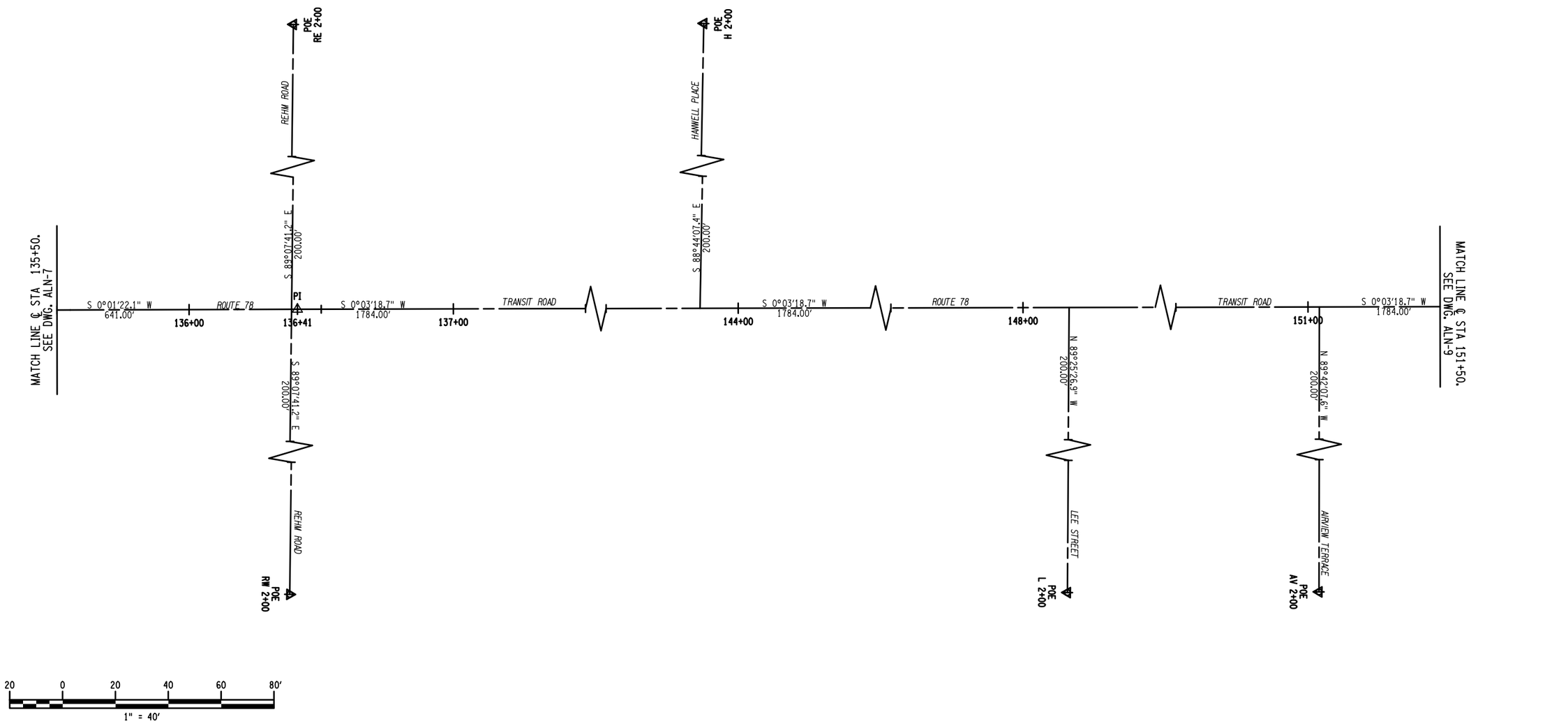

AFFIX SEAL:
ON:

ALTERED BY:
ON:

D264571

STATE OF NEW YORK
ROBERT F. SCHALLER
LICENSED PROFESSIONAL ENGINEER
NO. 082465

SURVEY NOTES:
BASELINE & CENTERLINE HORIZONTAL CONTROL
CF= 0.999938568
DATUM: NAD 83 (2011) EPOCH 2010

AS-BUILT REVISIONS
DESCRIPTION OF ALTERATIONS:

NY 78, TRANSIT ROAD, S.H. 1334A-1
FRENCH ROAD TO WEHRLE DRIVE
TOWNS OF CHEEKTOWAGA & LANCASTER
VILLAGE OF DEPEW
COUNTY: ERIE REGION: 05

PIN 5813.61
NY 78

BRIDGES

CULVERTS

ALL DIMENSIONS IN ft UNLESS OTHERWISE NOTED

ALIGNMENT PLAN
STA 135+50 TO STA 151+50

CONTRACT NUMBER
D264571

DRAWING NO. ALN-8
SHEET NO. 69

IT IS A VIOLATION OF LAW FOR ANY PERSON, UNLESS THEY ARE ACTING UNDER THE DIRECTION OF A LICENSED PROFESSIONAL ENGINEER, ARCHITECT, LANDSCAPE ARCHITECT, OR LAND SURVEYOR, TO ALTER AN ITEM IN ANY WAY. IF AN ITEM BEARING THE STAMP OF A LICENSED PROFESSIONAL IS ALTERED, THE ALTERING ENGINEER, ARCHITECT, LANDSCAPE ARCHITECT, OR LAND SURVEYOR SHALL STAMP THE DOCUMENT AND INCLUDE THE NOTATION "ALTERED BY" FOLLOWED BY THEIR SIGNATURE, THE DATE OF SUCH ALTERATION, AND A SPECIFIC DESCRIPTION OF THE ALTERATION.

NEW YORK STATE OF OPPORTUNITY. Department of Transportation

DESIGN SUPERVISOR S. S. VAIDYA JOB MANAGER R. F. SCHALLER DESIGN V. M. DINATALE CHECK R. F. SCHALLER DRAFTING V. M. DINATALE CHECK R. F. SCHALLER PROJECT MANAGER S. S. VAIDYA

FILE NAME = 581361_CPH_HWY_ALN-8.dgn
DATE/TIME = 22-JUN-2021 12:35
USER = ccrtes

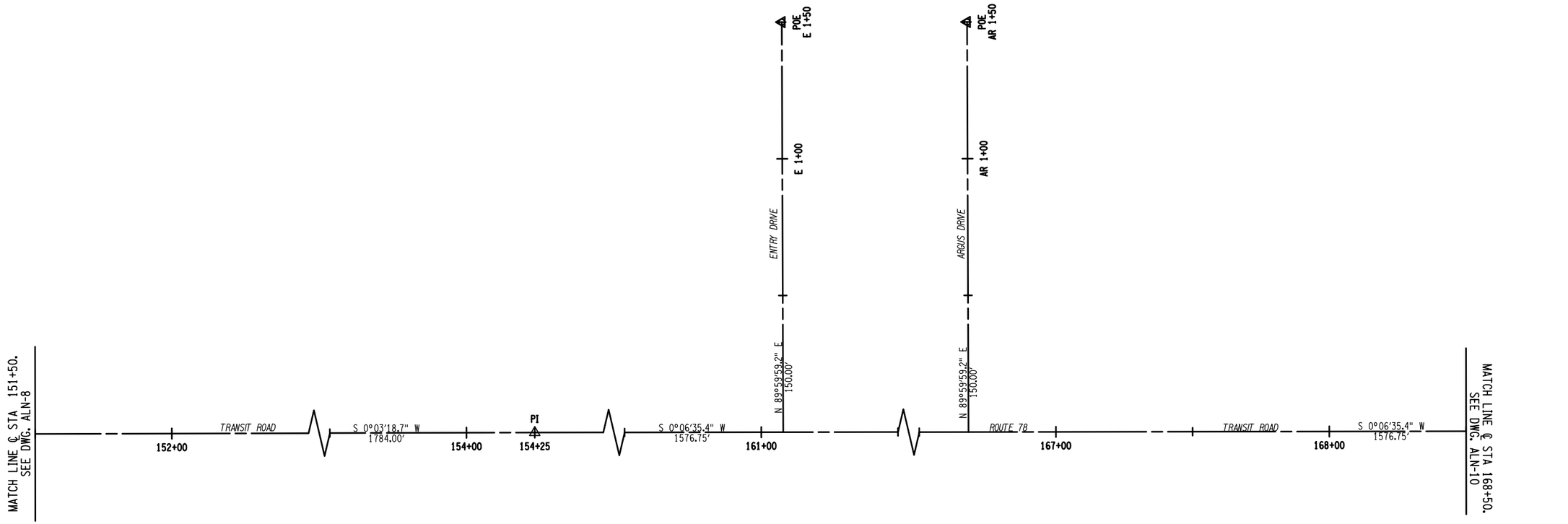

20 0 20 40 60 80'

1" = 40'

AFFIX SEAL: ON:	ALTERED BY: ON:
D264571 STATE OF NEW YORK ROBERT F. SCHALLER NO. 082465 LICENSED PROFESSIONAL ENGINEER	

SURVEY NOTES:
BASELINE & CENTERLINE HORIZONTAL CONTROL
CF= 0.999938568
DATUM: NAD 83 (2011) EPOCH 2010

AS-BUILT REVISIONS DESCRIPTION OF ALTERATIONS:	NY 78, TRANSIT ROAD, S.H. 1334A-1	PIN 5813.61 NY 78	BRIDGES	CULVERTS	ALL DIMENSIONS IN ft UNLESS OTHERWISE NOTED	CONTRACT NUMBER D264571
	FRENCH ROAD TO WEHRLE DRIVE				ALIGNMENT PLAN STA 151+50 TO 168+50	DRAWING NO. ALN-9
	TOWNS OF CHEEKTOWAGA & LANCASTER					SHEET NO. 70
	VILLAGE OF DEPEW					
	COUNTY: ERIE REGION: 05					

IT IS A VIOLATION OF LAW FOR ANY PERSON, UNLESS THEY ARE ACTING UNDER THE DIRECTION OF A LICENSED PROFESSIONAL ENGINEER, ARCHITECT, LANDSCAPE ARCHITECT, OR LAND SURVEYOR, TO ALTER AN ITEM IN ANY WAY. IF AN ITEM BEARING THE STAMP OF A LICENSED PROFESSIONAL IS ALTERED, THE ALTERING ENGINEER, ARCHITECT, LANDSCAPE ARCHITECT, OR LAND SURVEYOR SHALL STAMP THE DOCUMENT AND INCLUDE THE NOTATION "ALTERED BY" FOLLOWED BY THEIR SIGNATURE, THE DATE OF SUCH ALTERATION, AND A SPECIFIC DESCRIPTION OF THE ALTERATION.

NEW YORK STATE OF OPPORTUNITY. Department of Transportation

DESIGN SUPERVISOR S. S. VAIDYA JOB MANAGER R. F. SCHALLER DESIGN V. M. DINATALE CHECK R. F. SCHALLER DRAFTING V. M. DINATALE CHECK R. F. SCHALLER PROJECT MANAGER S. S. VAIDYA

FILE NAME = 581361_CPH_HWY_ALN-9.dgn
DATE/TIME = 22-JUN-2021 12:35
USER = cortes

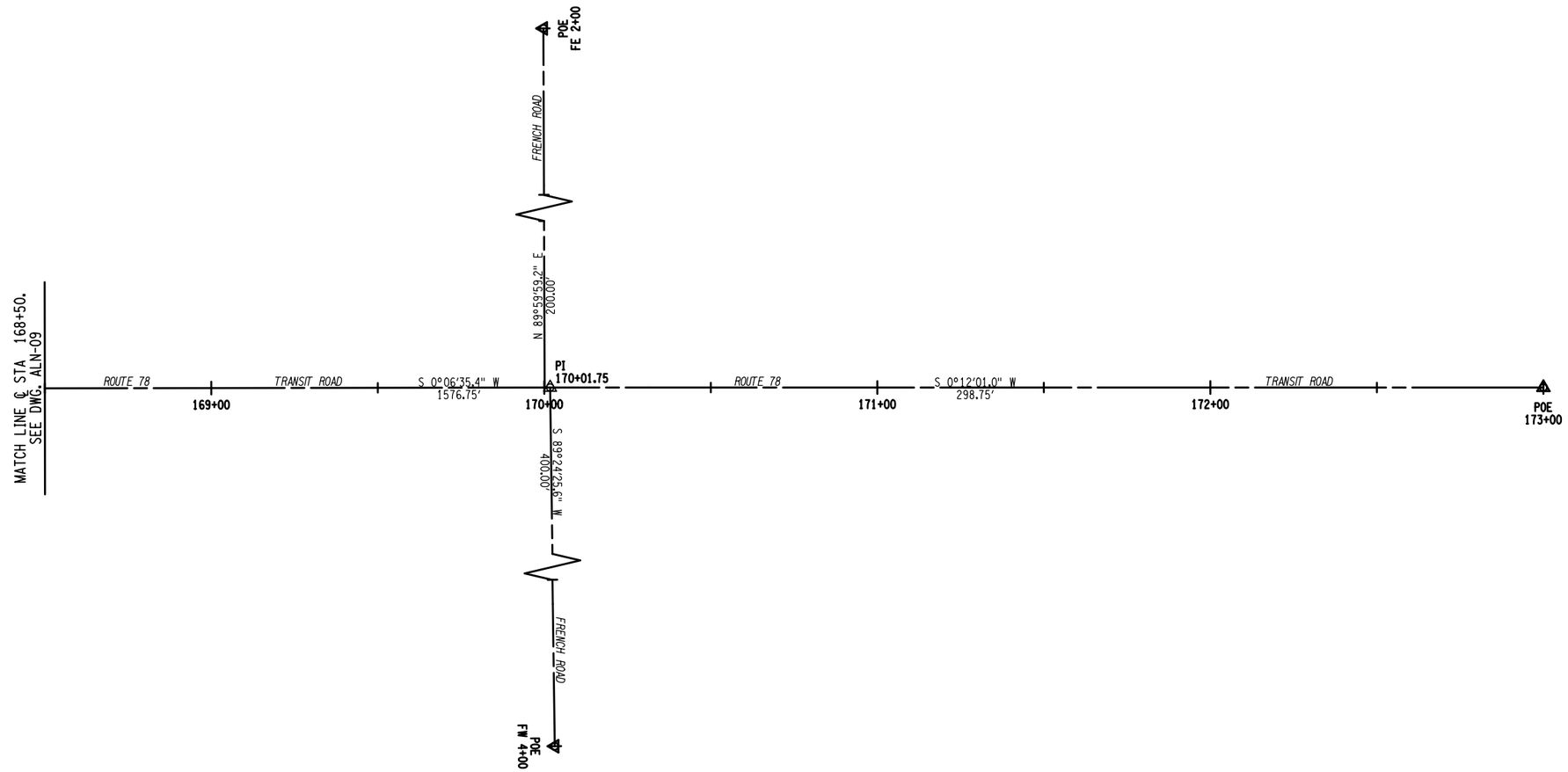

20 0 20 40 60 80'

1" = 40'

AFFIX SEAL: ON:	ALTERED BY: ON:
D264571 STATE OF NEW YORK ROBERT F. SCHALLER NO. 082465 LICENSED PROFESSIONAL ENGINEER	

SURVEY NOTES:
BASELINE & CENTERLINE HORIZONTAL CONTROL
CF- 0999938568
DATUM: NAD 83 (2011) EPOCH 2010

AS-BUILT REVISIONS DESCRIPTION OF ALTERATIONS:	NY 78, TRANSIT ROAD, S.H. 1334A-1	PIN 5813.61 NY 78	BRIDGES	CULVERTS	ALL DIMENSIONS IN ft UNLESS OTHERWISE NOTED	CONTRACT NUMBER D264571
	FRENCH ROAD TO WEHRLE DRIVE				ALIGNMENT PLAN STA 165+50 TO STA 173+00	DRAWING NO. ALN-10
	TOWNS OF CHEEKTOWAGA & LANCASTER					SHEET NO. 71
	VILLAGE OF DEPEW					
	COUNTY: ERIE REGION: 05					

IT IS A VIOLATION OF LAW FOR ANY PERSON, UNLESS THEY ARE ACTING UNDER THE DIRECTION OF A LICENSED PROFESSIONAL ENGINEER, ARCHITECT, LANDSCAPE ARCHITECT, OR LAND SURVEYOR, TO ALTER AN ITEM IN ANY WAY. IF AN ITEM BEARING THE STAMP OF A LICENSED PROFESSIONAL IS ALTERED, THE ALTERING ENGINEER, ARCHITECT, LANDSCAPE ARCHITECT, OR LAND SURVEYOR SHALL STAMP THE DOCUMENT AND INCLUDE THE NOTATION "ALTERED BY" FOLLOWED BY THEIR SIGNATURE, THE DATE OF SUCH ALTERATION, AND A SPECIFIC DESCRIPTION OF THE ALTERATION.

NEW YORK STATE OF OPPORTUNITY. Department of Transportation

DESIGN SUPERVISOR S. S. VAIDYA JOB MANAGER R. F. SCHALLER DESIGN V. M. DINATALE CHECK R. F. SCHALLER DRAFTING V. M. DINATALE CHECK R. F. SCHALLER PROJECT MANAGER S. S. VAIDYA

FILE NAME = 581361_CPH_HWY_ALN-10.dgn
DATE/TIME = 22-JUN-2021 12:35
USER = corites

SIDE ROAD ALIGNMENTS OFF TRANSIT ROAD

AERO DRIVE

PROJECT NAME: 581361_CPH_ALN_A
ALIGNMENT DESCRIPTION: INR PROJECT ALIGNMENTS
HORIZONTAL ALIGNMENT NAME: AERO_AC ACTUAL
DESCRIPTION: AERO ACTUAL COORDS
STYLE: AC_P

		STATION	NORTHING	EASTING
ELEMENT: LINEAR				
POB	( )	A 0+00.00	1072978.134	1117874.288
POE	( )	A 3+00.00	1072904.647	1117583.427
TANGENTIAL DIRECTION:		S 75°49'14.7" W		
TANGENTIAL LENGTH:		300.000		

AIRVIEW TERRACE

PROJECT NAME: 581361_CPH_ALN_A
DESCRIPTION: INR PROJECT ALIGNMENTS
HORIZONTAL ALIGNMENT NAME: AIRVIEW TERRACE ALG
ALIGNMENT DESCRIPTION: AIRVIEW ACTUAL COORDS
STYLE: AC_P

		STATION	NORTHING	EASTING
ELEMENT: LINEAR				
POB	( )	AV 0+00.00	1065333.168	1117866.588
POE	( )	AV 2+00.00	1065334.208	1117666.591
TANGENTIAL DIRECTION:		N 89°42'07.6" W		
TANGENTIAL LENGTH:		200.000		

ARGUS DRIVE

PROJECT NAME: 581361_CPH_ALN_A
DESCRIPTION: INR PROJECT ALIGNMENTS
HORIZONTAL ALIGNMENT NAME: ARGUS_AC ACTUAL
ALIGNMENT DESCRIPTION: ARGUS ACTUAL COORDS
ALIGNMENT STYLE: AC_P

		STATION	NORTHING	EASTING
ELEMENT: LINEAR				
POB	( )	AR 0+00.00	1063769.464	1117863.896
POE	( )	AR 1+50.00	1063769.465	1118013.896
TANGENTIAL DIRECTION:		N 89°59'59.2" E		
TANGENTIAL LENGTH:		150.000		

CLOVERLEAF DRIVE

PROJECT NAME: 581361_CPH_ALN_A
DESCRIPTION: INR PROJECT ALIGNMENTS
HORIZONTAL ALIGNMENT NAME: CLOVERLEAF_AC ACTUAL
ALIGNMENT DESCRIPTION: CLOVERLEAF ACTUAL COORDS
STYLE: AC_P

		STATION	NORTHING	EASTING
ELEMENT: LINEAR				
POB	( )	C 0+00.00	1069152.072	1117870.852
POE	( )	C 2+00.00	1069152.472	1117670.852
TANGENTIAL DIRECTION:		N 89°53'07.3" W		
TANGENTIAL LENGTH:		200.000		

FREEMAN ROAD

PROJECT NAME: 581361_CPH_ALN_A
DESCRIPTION: INR PROJECT ALIGNMENTS
HORIZONTAL ALIGNMENT NAME: FREEMAN_AC ACTUAL
ALIGNMENT DESCRIPTION: FREEMAN ACTUAL COORDS
STYLE: AC_P

		STATION	NORTHING	EASTING
ELEMENT: LINEAR				
POB	( )	FE 6+61.53	1075760.360	1117541.150
POE	( )	FE 8+52.50	1075758.005	1117732.106
TANGENTIAL DIRECTION:		S 89°17'36.0" E		
TANGENTIAL LENGTH:		190.970		

		STATION	NORTHING	EASTING
ELEMENT: CIRCULAR				
PC	( )	FE 8+52.50	1075758.005	1117732.106
PI	( )	FE 9+44.25	1075756.874	1117823.853
CC	( )		1074445.775	1117715.920
PT	( )	FE 10+35.71	1075742.986	1117914.550
RADIUS:		1312.33		
DELTA:		7°59'55.9" RIGHT		
DEGREE OF CURVATURE:		4°21'57.4"		
LENGTH:		183.21		
TANGENT:		91.75		
CHORD:		183.06		
MIDDLE ORDINATE:		3.20		
EXTERNAL:		3.20		
TANGENT DIRECTION:		S 89°17'36.0" E		
RADIAL DIRECTION:		S 0°42'24.0" W		
CHORD DIRECTION:		S 85°17'38.0" E		
RADIAL DIRECTION:		S 8°42'19.9" W		
TANGENT DIRECTION:		S 81°17'40.1" E		

		STATION	NORTHING	EASTING
ELEMENT: LINEAR				
POB	( )	FE 10+35.71	1075742.986	1117914.550
POE	( )	FE 11+26.51	1075729.243	1118004.304
TANGENTIAL DIRECTION:		S 81°17'40.1" E		
TANGENTIAL LENGTH:		90.80		

		STATION	NORTHING	EASTING
ELEMENT: CIRCULAR				
PC	( )	FE 11+26.51	1075729.243	1118004.304
PI	( )	FE 12+20.81	1075714.970	1118097.514
CC	( )		1077026.454	1118202.933
PT	( )	FE 13+14.78	1075714.171	1118191.808
RADIUS:		1312.330		
DELTA:		8°13'11.2" LEFT		
DEGREE OF CURVATURE:		4°21'57.4"		
LENGTH:		188.270		
TANGENT:		94.300		
CHORD:		188.110		
MIDDLE ORDINATE:		3.370		
EXTERNAL:		3.380		
TANGENT DIRECTION:		S 81°17'40.1" E		
RADIAL DIRECTION:		S 8°42'19.9" W		
CHORD DIRECTION:		S 85°24'15.7" E		
RADIAL DIRECTION:		S 0°29'08.7" W		
TANGENT DIRECTION:		S 89°30'51.3" E		

		STATION	NORTHING	EASTING
ELEMENT: LINEAR				
POB	( )	FE 13+14.78	1075714.171	1118191.808
POE	( )	FE 14+14.05	1075713.329	1118291.074
TANGENTIAL DIRECTION:		S 89°30'51.3" E		
TANGENTIAL LENGTH:		99.27		

ENTRY DRIVE

PROJECT NAME: 581361_CPH_ALN_A
DESCRIPTION: INR PROJECT ALIGNMENTS
HORIZONTAL ALIGNMENT NAME: ENTRY_AC ACTUAL
ALIGNMENT DESCRIPTION: ENTRY ACTUAL COORDS
STYLE: AC_P

		STATION	NORTHING	EASTING
ELEMENT: LINEAR				
POB	( )	E 0+00.00	1064329.464	1117864.97
POE	( )	E 1+50.00	1064329.464	1118014.969
TANGENTIAL DIRECTION:		N 89°59'59.2" E		
TANGENTIAL LENGTH:		150.00		

FRENCH ROAD

PROJECT NAME: 581361_CPH_ALN_A
DESCRIPTION: INR PROJECT ALIGNMENTS
HORIZONTAL ALIGNMENT NAME: FRENCH_AC ACTUAL
ALIGNMENT DESCRIPTION: FRENCH ACTUAL COORDS
STYLE: AC_P

		STATION	NORTHING	EASTING
ELEMENT: LINEAR				
POB	( )	FE 0+00.00	1063437.387	1117863.26
POE	( )	FE 2+00.00	1063437.388	1118063.26
TANGENTIAL DIRECTION:		N 89°59'59.2" E		
TANGENTIAL LENGTH:		200.00		

		STATION	NORTHING	EASTING
ELEMENT: LINEAR				
POB	( )	FW 0+00.00	1063435.736	1117863.26
POE	( )	FW 4+00.00	1063431.597	1117463.28
TANGENTIAL DIRECTION:		S 89°24'25.6" W		
TANGENTIAL LENGTH:		400.00		

HANWELL PLACE

PROJECT NAME: 581361_CPH_ALN_A
DESCRIPTION: INR PROJECT ALIGNMENTS
HORIZONTAL ALIGNMENT NAME: HANWELL PL ALG
ALIGNMENT DESCRIPTION: HANWELL ACTUAL COORDS
STYLE: AC_P

		STATION	NORTHING	EASTING
ELEMENT: LINEAR				
POB	( )	H 0+00.00	1066051.935	1117867.28
POE	( )	H 2+00.00	1066047.521	1118067.231
TANGENTIAL DIRECTION:		S 88°44'07.4" E		
TANGENTIAL LENGTH:		200.00		

LEE STREET

PROJECT NAME: 581361_CPH_ALN_A
DESCRIPTION: INR PROJECT ALIGNMENTS
HORIZONTAL ALIGNMENT NAME: LEE_AC ACTUAL
ALIGNMENT DESCRIPTION: LEE ACTUAL COORDS
STYLE: AC_P

		STATION	NORTHING	EASTING
ELEMENT: LINEAR				
POB	( )	L 0+00.00	1065620.028	1117866.864
POE	( )	L 2+00.00	1065622.038	1117666.874
TANGENTIAL DIRECTION:		N 89°25'26.9" W		
TANGENTIAL LENGTH:		200.00		

AFFIX SEAL:
ON:

ALTERED BY:
ON:

D264571
STATE OF NEW YORK
ROBERT F. SCHALLER
LICENSED PROFESSIONAL ENGINEER
NO. 082465

AS-BUILT REVISIONS
DESCRIPTION OF ALTERATIONS:

NY 78, TRANSIT ROAD, S.H. 1334A-1
FRENCH ROAD TO WEHRLE DRIVE
TOWNS OF CHEEKTOWAGA & LANCASTER
VILLAGE OF DEPEW
COUNTY: ERIE REGION: 05

PIN 5813.61
NY 78

BRIDGES

CULVERTS

ALL DIMENSIONS IN ft UNLESS OTHERWISE NOTED

ALIGNMENT TABLE 1

CONTRACT NUMBER
D264571

DRAWING NO. ALN-T1
SHEET NO. 72

IT IS A VIOLATION OF LAW FOR ANY PERSON, UNLESS THEY ARE ACTING UNDER THE DIRECTION OF A LICENSED PROFESSIONAL ENGINEER, ARCHITECT, LANDSCAPE ARCHITECT, OR LAND SURVEYOR, TO ALTER AN ITEM IN ANY WAY. IF AN ITEM BEARING THE STAMP OF A LICENSED PROFESSIONAL IS ALTERED, THE ALTERING ENGINEER, ARCHITECT, LANDSCAPE ARCHITECT, OR LAND SURVEYOR SHALL STAMP THE DOCUMENT AND INCLUDE THE NOTATION "ALTERED BY" FOLLOWED BY THEIR SIGNATURE, THE DATE OF SUCH ALTERATION, AND A SPECIFIC DESCRIPTION OF THE ALTERATION.

NEW YORK STATE OF OPPORTUNITY. Department of Transportation

DESIGN SUPERVISOR S. S. VAIDYA
JOB MANAGER R. F. SCHALLER
DESIGN V. M. DINATALE
CHECK R. F. SCHALLER
DRAFTING V. M. DINATALE
CHECK R. F. SCHALLER
PROJECT MANAGER S. S. VAIDYA
FILE NAME = 581361_CPH_HWY_ALN-T1..dgn
DATE/TIME = 22-JUN-2021 12:36
USER = ccrites

MAINLINE TRANSIT ROAD ALIGNMENT

MAINLINE TRANSIT ROAD

PROJECT NAME: 581361_CPH_ALN_A
DESCRIPTION: INR PROJECT ALIGNMENTS
HORIZONTAL ALIGNMENT NAME: TRANSIT_AC ACTUAL
ALIGNMENT DESCRIPTION: TRANSIT ACTUAL COORDS
STYLE: AC_P

		STATION	NORTHING	EASTING
ELEMENT: LINEAR				
POB	( )	3+00.00	1080137.375	1117905.786
PI	( )	30+00.00	1077437.459	1117884.489
TANGENTIAL DIRECTION:		S 0°27'07.0" W		
TANGENTIAL LENGTH:		2700.00		
ELEMENT: LINEAR				
PI	( )	30+00.00	1077437.459	1117884.489
PI	( )	54+00.00	1075037.475	1117875.809
TANGENTIAL DIRECTION:		S 0°12'26.0" W		
TANGENTIAL LENGTH:		2400.00		
ELEMENT: LINEAR				
PI	( )	54+00.00	1075037.475	1117875.809
PI	( )	60+00.01	1074437.464	1117874.599
TANGENTIAL DIRECTION:		S 0°06'56.0" W		
TANGENTIAL LENGTH:		600.01		
ELEMENT: LINEAR				
PI	( )	60+00.01	1074437.464	1117874.599
PI	( )	75+00.00	1072937.475	1117874.279
TANGENTIAL DIRECTION:		S 0°00'44.0" W		
TANGENTIAL LENGTH:		1499.99		
ELEMENT: LINEAR				
PI	( )	75+00.00	1072937.475	1117874.279
PI	( )	99+64.00	1070473.476	1117872.559
TANGENTIAL DIRECTION:		S 0°02'24.0" W		
TANGENTIAL LENGTH:		2464.00		
ELEMENT: LINEAR				
PI	( )	99+64.00	1070473.476	1117872.559
PI	( )	122+00.00	1068237.478	1117869.67
TANGENTIAL DIRECTION:		S 0°04'26.5" W		
TANGENTIAL LENGTH:		2236.00		
ELEMENT: LINEAR				
PI	( )	122+00.00	1068237.478	1117869.67
PI	( )	130+00.00	1067437.48	1117868.252
TANGENTIAL DIRECTION:		S 0°06'05.6" W		
TANGENTIAL LENGTH:		800.00		
ELEMENT: LINEAR				
PI	( )	130+00.00	1067437.48	1117868.252
PI	( )	136+41.00	1066796.48	1117867.997
TANGENTIAL DIRECTION:		S 0°01'22.1" W		
TANGENTIAL LENGTH:		641.00		
ELEMENT: LINEAR				
PI	( )	136+41.00	1066796.48	1117867.997
PI	( )	154+25.00	1065012.481	1117866.279
TANGENTIAL DIRECTION:		S 0°03'18.7" W		
TANGENTIAL LENGTH:		1784.00		
ELEMENT: LINEAR				
PI	( )	154+25.00	1065012.481	1117866.279
PI	( )	170+01.75	1063435.736	1117863.257
TANGENTIAL DIRECTION:		S 0°06'35.4" W		
TANGENTIAL LENGTH:		1576.75		
ELEMENT: LINEAR				
PI	( )	170+01.75	1063435.736	1117863.257
POE	( )	173+00.00	1063137.485	1117862.214
TANGENTIAL DIRECTION:		S 0°12'01.0" W		
TANGENTIAL LENGTH:		298.25		

SIDE ROAD ALIGNMENTS OFF TRANSIT ROAD (CONTINUED)

MAPLE DRIVE

PROJECT NAME: 581361_CPH_ALN_A
DESCRIPTION: INR PROJECT ALIGNMENTS
HORIZONTAL ALIGNMENT NAME: MAPLE_AC ACTUAL
ALIGNMENT DESCRIPTION: MAPLE ACTUAL COORDS
STYLE: AC_P

		STATION	NORTHING	EASTING
ELEMENT: LINEAR				
POB	( )	M 0+00.00	1074634.719	1117874.997
POE	( )	M 2+00.00	1074606.433	1118072.986
TANGENTIAL DIRECTION:		S 81°52'09.5" E		
TANGENTIAL LENGTH:		200.00		

PFOHL ROAD

PROJECT NAME: 581361_CPH_ALN_A
DESCRIPTION: INR PROJECT ALIGNMENTS
HORIZONTAL ALIGNMENT NAME: PFOHL_AC ACTUAL
ALIGNMENT DESCRIPTION: PFOHL ACTUAL COORDS
STYLE: AC_P

		STATION	NORTHING	EASTING
ELEMENT: LINEAR				
POB	( )	P 0+00.00	1071293.568	1117873.131
POE	( )	P 3+00.00	1071293.78	1117573.131
TANGENTIAL DIRECTION:		N 89°57'34.0" W		
TANGENTIAL LENGTH:		300.00		

PLEASANT VIEW DRIVE

PROJECT NAME: 581361_CPH_ALN_A
DESCRIPTION: INR PROJECT ALIGNMENTS
HORIZONTAL ALIGNMENT NAME: PLEASANT VIEW DR ALG
ALIGNMENT DESCRIPTION: PLEASANT VIEW ACTUAL COORDS
STYLE: AC_P

		STATION	NORTHING	EASTING
ELEMENT: LINEAR				
POB	( )	PV 0+00.00	1069132.068	1117870.826
POE	( )	PV 2+00.00	1069097.026	1118067.732
TANGENTIAL DIRECTION:		S 79°54'32.6" E		
TANGENTIAL LENGTH:		200.00		

REHM ROAD

PROJECT NAME: 581361_CPH_ALN_A
DESCRIPTION: INR PROJECT ALIGNMENTS
HORIZONTAL ALIGNMENT NAME: REHM_AC ACTUAL
ALIGNMENT DESCRIPTION: REHM ACTUAL COORDS
STYLE: AC_P

		STATION	NORTHING	EASTING
ELEMENT: LINEAR				
POB	( )	RE 0+00.00	1066798.696	1117867.998
POE	( )	RE 2+00.00	1066795.653	1118067.975
TANGENTIAL DIRECTION:		S 89°07'41.2" E		
TANGENTIAL LENGTH :		200.00		

		STATION	NORTHING	EASTING
ELEMENT: LINEAR				
POB	( )	RW 0+00.00	1066801.74	1117668.021
POE	( )	RW 2+00.00	1066798.696	1117867.998
TANGENTIAL DIRECTION:		S 89°07'41.2" E		
TANGENTIAL LENGTH :		200.00		

NYS I-90 THRUWAY ENTRANCE

PROJECT NAME: 581361_CPH_ALN_A
DESCRIPTION: INR PROJECT ALIGNMENTS
HORIZONTAL ALIGNMENT NAME: THRUWAY_AC ACTUAL
ALIGNMENT DESCRIPTION: THRUWAY ACTUAL COORDS
STYLE: AC_P

		STATION	NORTHING	EASTING
ELEMENT: LINEAR				
POB	( )	T 0+00.00	1073781.246	1117874.459
POE	( )	T 5+00.00	1073781.358	1117374.459
TANGENTIAL DIRECTION:		N 89°59'14.0" W		
TANGENTIAL LENGTH:		500.00		

MAINLINE GENESEE STREET ALIGNMENT

GENESEE STREET

PROJECT NAME: 581361_CPH_ALN_A
DESCRIPTION: INR PROJECT ALIGNMENTS
HORIZONTAL ALIGNMENT NAME: GENESEE STREET ALG
ALIGNMENT DESCRIPTION: GENESEE ACTUAL COORDS
STYLE: AC_P

		STATION	NORTHING	EASTING
ELEMENT: LINEAR				
POB	( )	0+00.00	1070090.083	1116007.951
	EQNBK	2+11.60	1070098.164	1116219.397
	EQNAHD	G 268+21.33	1070098.164	1116219.397
PI	( )	G 268+21.33	1070098.164	1116219.398
TANGENTIAL DIRECTION:		N 87°48'41.6" E		
TANGENTIAL LENGTH:		211.6		
ELEMENT: LINEAR				
PI	( )	G 268+21.33	1070098.164	1116219.398
PC	( )	G 277+48.36	1070235.669	1117136.174
TANGENTIAL DIRECTION:		N 81°28'11.7" E		
TANGENTIAL LENGTH:		927.03		
ELEMENT: CIRCULAR				
PC	( )	G 277+48.36	1070235.669	1117136.174
PI	( )	G 278+41.22	1070249.442	1117228.003
CC	( )		1071180.035	1116994.53
PT	( )	G 279+33.49	1070280.648	1117315.458
RADIUS:		954.93		
DELTA:		11°06'28.1" LEFT		
DEGREE OF CURVATURE:		6°00'00.0"		
LENGTH:		185.13		
TANGENT:		92.86		
CHORD:		184.84		
MIDDLE ORDINATE:		4.48		
EXTERNAL:		4.5		
TANGENT DIRECTION:		N 81°28'11.7" E		
RADIAL DIRECTION:		S 8°31'48.3" E		
CHORD DIRECTION:		N 75°54'57.7" E		
RADIAL DIRECTION:		S 19°38'16.3" E		
TANGENT DIRECTION:		N 70°21'43.7" E		
ELEMENT: LINEAR				
PT	( )	G 279+33.49	1070280.648	1117315.458
PI	( )	G 285+25.00	1070479.439	1117872.563
TANGENTIAL DIRECTION:		N 70°21'43.7" E		
TANGENTIAL LENGTH:		591.51		
ELEMENT: LINEAR				
PI	( )	G 285+25.00	1070479.439	1117872.563
PC	( )	G 287+29.56	1070550.214	1118064.491
TANGENTIAL DIRECTION:		N 69°45'29.9" E		
TANGENTIAL LENGTH:		204.56		
ELEMENT: CIRCULAR				
PC	( )	G 287+29.56	1070550.214	1118064.491
PI	( )	G 289+27.09	1070618.555	1118249.822
CC	( )		1063044.282	1120832.339
PT	( )	G 291+24.54	1070677.667	1118438.299
RADIUS:		8000		
DELTA:		2°49'43.8" RIGHT		
DEGREE OF CURVATURE:		0°42'58.3"		
LENGTH:		394.98		
TANGENT:		197.53		
CHORD:		394.94		
MIDDLE ORDINATE:		2.44		
EXTERNAL:		2.44		
TANGENT DIRECTION:		N 69°45'29.9" E		
RADIAL DIRECTION:		S 20°14'30.1" E		
CHORD DIRECTION:		N 71°10'21.8" E		
RADIAL DIRECTION:		S 17°24'46.3" E		
TANGENT DIRECTION:		N 72°35'13.7" E		
ELEMENT: LINEAR				
PT	( )	G 291+24.54	1070677.667	1118438.299
POE	( )	G 292+76.34	1070723.093	1118583.138
TANGENTIAL DIRECTION:		N 72°35'13.7" E		
TANGENTIAL LENGTH:		151.79		

AFFIX SEAL:
ON:

ALTERED BY:
ON:

D264571
STATE OF NEW YORK
ROBERT F. SCHALLER
NO. 082465
LICENSED PROFESSIONAL ENGINEER

AS-BUILT REVISIONS
DESCRIPTION OF ALTERATIONS:

NY 78, TRANSIT ROAD, S.H. 1334A-1
FRENCH ROAD TO WEHRLE DRIVE
TOWNS OF CHEEKTOWAGA & LANCASTER
VILLAGE OF DEPEW
COUNTY: ERIE REGION: 05

PIN 5813.61
NY 78

BRIDGES

CULVERTS

ALL DIMENSIONS IN ft UNLESS OTHERWISE NOTED

ALIGNMENT TABLE 2

CONTRACT NUMBER
D264571

DRAWING NO. ALN-T2
SHEET NO. 73

IT IS A VIOLATION OF LAW FOR ANY PERSON, UNLESS THEY ARE ACTING UNDER THE DIRECTION OF A LICENSED PROFESSIONAL ENGINEER, ARCHITECT, LANDSCAPE ARCHITECT, OR LAND SURVEYOR, TO ALTER AN ITEM IN ANY WAY. IF AN ITEM BEARING THE STAMP OF A LICENSED PROFESSIONAL IS ALTERED, THE ALTERING ENGINEER, ARCHITECT, LANDSCAPE ARCHITECT, OR LAND SURVEYOR SHALL STAMP THE DOCUMENT AND INCLUDE THE NOTATION "ALTERED BY" FOLLOWED BY THEIR SIGNATURE, THE DATE OF SUCH ALTERATION, AND A SPECIFIC DESCRIPTION OF THE ALTERATION.

NEW YORK STATE OF OPPORTUNITY. Department of Transportation

DESIGN SUPERVISOR S. S. VAIDYA
JOB MANAGER R. F. SCHALLER
DESIGN V. M. DINATALE
CHECK R. F. SCHALLER
DRAFTING V. M. DINATALE
CHECK R. F. SCHALLER
PROJECT MANAGER S. S. VAIDYA
FILE NAME = 581361_CPH_HWY_ALN-T2_.dgn
DATE/TIME = 22-JUN-2021 12:36
USER = ccrites

HORIZONTAL CONTROL POINT DATA

HORIZONTAL CONTROL POINT DATA						
CONTROL POINT NO.	STATION	BEARING	DISTANCE	NORTHING	EASTING	ELEV
10	10+00			1062822.51	1117842.36	672.81
		N 00°32'08" W	503.93'			
11	15+03.93			1063326.42	1117837.65	674.94
		N 01°08'39" W	504.25'			
20	20+08.18			1063830.57	1117827.58	680.11
		N 00°21'02" W	490.38'			
30	24+98.56			1064320.94	1117824.58	679.04
		N 00°28'53" E	497.61'			
40	29+96.17			1064818.53	1117828.76	680.48
		N 00°16'12" W	549.77'			
50	35+45.94			1065368.29	1117826.17	681.25
		N 00°30'19" E	543.12'			
60	40+89.06			1065911.39	1117830.96	686.37
		N 00°10'53"	486.62'			
70	45+75.68			1066398.01	1117832.50	697.92
		N 00°40'02" E	455.18'			
80	50+30.86			1066853.16	1117837.80	710.57
		N 00°12'17" W	531.74			
90	55+62.60			1067384.90	1117835.90	725.31
		N 00°38'27" W	502.53'			
100	60+65.14			1067887.40	1117830.28	723.03
		N 00°17'41" E	491.87'			
110	65+57.00			1068379.26	1117832.81	721.07
		N 00°10'06" E	496.61'			
120	70+53.61			1068875.87	1117834.27	712.63
		N 00°21'09" W	458.44'			
130	75+12.05			1069334.30	1117831.45	703.35
		N 00°03'45" W	484.98'			
140	79+97.03			1069819.28	1117830.92	698.96
		N 00°27'14" E	479.68'			
150	84+76.71			1070298.94	1117834.72	697.30
		N 26°07'23" W	201.70'			
340	86+78.41			1070480.04	1117745.91	698.76
		N 11°10'02" E	379.35'			
160	90+57.76			1070852.21	1117819.38	700.42
		N 00°37'59" E	515.81'			
170	95+73.58			1071367.99	1117825.08	698.21
		N 01°09'29" W	494.27'			
180	100+67.85			1071862.16	1117815.09	698.41
		N 00°54'59" E	497.76'			
190	105+65.61			1072359.86	1117823.05	697.62
		N 00°07'48" W	506.66'			
200	110+72.27			1072866.52	1117821.90	698.70
		N 00°53'59" W	543.82'			
210	116+16.09			1073410.27	1117813.36	698.07
		N 00°30'19" W	513.82'			
220	121+29.91			1073924.07	1117808.83	700.61
		N 00°52'11" E	508.52'			
230	126+38.43			1074432.53	1117816.55	697.87
		N 01°26'06" E	508.31'			
240	131+46.74			1074940.68	1117829.28	699.40
		N 00°49'51" W	484.77'			
250	136+31.51			1075425.40	1117822.25	702.20
		N 00°16'08" E	496.64'			
260	141+28.14			1075922.03	1117824.58	704.00
		N 00°14'49" E	493.94'			
270	146+22.09			1076415.97	1117826.71	703.40
		N 00°08'11" E	369.61'			
280	149+91.70			1076785.58	1117827.59	702.29
		N 01°26'10" W	532.26'			
290	155+23.96			1077317.67	1117814.25	704.98
		N 01°12'28" E	520.39'			
300	160+44.34			1077837.94	1117825.22	707.66
310	G 10+00.00			1070119.76	1115743.21	708.40
		N 85°48'10" E	482.71			
311	G 14+82.72			1070155.09	1116224.63	700.20
		N 83°24'07" E	520.17'			
320	G 20+02.88			1070214.86	1116741.35	697.83
		N 80°52'10" E	490.91'			
330	G 24+93.79			1070292.76	1117226.04	699.68
		N 70°11'20" E	552.57'			
340	G 30+46.36			1070480.04	1117745.91	698.76
		N 71°10'19" E	559.51'			
350	G 36+05.87			1070660.61	1118275.48	701.51
		N 74°18'37" E	497.65'			
360	G 41.03.53			1070795.19	1118754.59	704.57
NEW YORK STATE PLANE COORDINATE SYSTEM; WESTERN ZONE 3103						
HORIZONTAL DATUM = NAD 83 (2011) EPOCH 2010				VERTICAL DATUM = NAVD 88		
UNITS = U.S. SURVEY FEET				COMBINED FACTOR = 0.999938568		

PROJECT BENCH MARKS

PROJECT BENCH MARKS				
BM NO.	ELEV	DESCRIPTION	STATION	OFFSET
BM-1	681.49	CHISELED SQUARE ON WEST SIDE OF CONCRETE SIGN BASE IN PARKING LOT OF 6041 TRANSIT ROAD	166+19.6	LT 56.8'
BM-2	680.59	CHISELED "X" ON SOUTH BONNET BOLT OF HYDRANT	161+66.3	RT 44.8'
BM-3	681.83	CHISELED "X" ON SOUTH BONNET BOLT OF HYDRANT IN FRONT OF BUILDING NO. 6140	155+37.4	RT 47.8'
BM-4	683.58	CHISELED "X" ON NORTH BONNET BOLT OF HYDRANT BUILDING NO. 6160	150+70.6	RT 47.2'
BM-5	681.75	CHISELED "X" ON SOUTHEAST RIM OF DRAINAGE STRUCTURE	147+99.3	RT 59.0'
BM-6	686.58	CHISELED "X" ON NORTH RIM OF SANITARY MANHOLE IN FRONT OF BUILDING NO. 6216	144+83.2	RT 33.0'
BM-7	699.78	CHISELED "X" ON NORTH RIM OF SANITARY MANHOLE	139+53.8	RT 31.5'
BM-8	712.61	CHISELED "X" ON NORTHWEST BONNET BOLT OF HYDRANT	136+20.1'	LT 62.9'
BM-9	726.45	CHISELED "X" ON NORTH SIDE OF CONCRETE BASE OF LIGHT POLE IN FRONT OF BUILDING NO. 6370	126+30.3	RT 74.3'
BM-10	723.87	RAILROAD SPIKE IN EASTERLY FACE OF POLE (NYSEG 206-1) IN FRONT OF BUILDING NO. 6386	121+82.6	RT 39.6'
BM-11	709.13	CHISELED "X" ON NORTHEAST BONNET BOLT OF HYDRANT BUILDING NO. 6404	113+10.0	RT 50.2'
BM-12	705.19	NAIL IN EAST FACE OF POLE 2' ABOVE GROUND	111+11.5	RT 45.0'
BM-13	700.02	EXSITING RAILROAD SPIKE IN EAST FACE OF POLE BUILDING NO. 6470	105+98.7	RT 39.3'
BM-14	700.65	CHISELED "X" ON NORTH BONNET BOLT OF HYDRANT BUILDING NO. 5100	98+46.5	RT 57.1'
BM-15	700.87	CHISELED "X" ON "T" POST OF GUIDE RAIL EXT.	95+90.4	RT 55.0'
BM-16	699.44	EXISTING NAIL IN EAST FACE OF POLE (NYSEG 217 229)	91+09.6	RT 83.4'
BM-17	698.64	EXISTING CHISELED SQUARE ON NORTHEAST CORNER OF CONCRETE HEADWALL	87+07.1	RT 65.4'
BM-18	697.75	CHISELED "X" ON WEST RIM MANHOLE	80+23.8	RT 59.6'
BM-19	699.30	"X" CUT ON EAST BOLT OF TRAFFIC CONTROL POLE	75+28.8	RT 66.1'
BM-20	697.12	CHISELED SQUARE ON SOUTHWEST CORNER OF CONCRETE HEADWALL	71+00.0	RT 73.5'
BM-21	700.00	WEST RIM OF MANHOLE	67+54.7	RT 59.7'
BM-22	700.82	EXISITING NAIL IN EAST FACE OF POLE (NYSEG 217 244)	64+61.2	RT 65.4'
BM-23	697.95	CHISELED "X" ON EAST RIM OF MANHOLE	59+87.0	RT 60.0'
BM-24	699.46	CHISELED "X" T POST	54+77.1	RT 38.8'
BM-25	704.58	CHISELED "X" ON NORTHEAST BONNET BOLT OF HYDRANT	50+28.4	RT 47.4'
BM-26	705.44	CHISELED "X" ON NORTH BONNET BOLT OF HYDRANT	46+20.2	RT 47.3'
BM-27	707.27	CHISELED "X" ON NORTHEAST BOLT OF SOUTHEAST LIGHT POLE BASE	40+30.0	RT 59.8'
BM-28	704.70	CHISELED "X" ON NORTH BONNET BOLT OF HYDRANT	37+01.8	RT 50.8'
BM-29	707.45	CHISELED "X" ON NORTH BONNET BOLT OF HYDRANT	31+28.4	RT 70.1'
BM-30	703.30	CHISELED "X" ON NORTHEAST BONNET BOLT OF HYDRANT	2+00.5	RT 32.3'
BM-31	697.97	NAIL IN NORTH FACE OF POLE (NYSEG 267 290 NYT 105)	G 273+94.8	RT 57.8'
BM-32	703.95	CHISELED "X" ON NORTH BONNET BOLT OF HYDRANT	G 279+00.7	RT 37.2'
BM-33	702.72	CHISELED "X" ON NORTHWEST BONNET BOLT OF HYDRANT	G 288+97.8	RT 48.6'

AFFIX SEAL:
ON:

D264571

STATE OF NEW YORK
ROBERT F. SCHALLER
NO. 082465
LICENSED PROFESSIONAL ENGINEER

ALTERED BY:
ON:

AS-BUILT REVISIONS
DESCRIPTION OF ALTERATIONS:

NY 78, TRANSIT ROAD, S.H. 1334A-1
FRENCH ROAD TO WEHRLE DRIVE
TOWNS OF CHEEKTOWAGA & LANCASTER
VILLAGE OF DEPEW
COUNTY: ERIE REGION: 05

PIN 5813.61
NY 78

BRIDGES

CULVERTS

ALL DIMENSIONS IN ft UNLESS OTHERWISE NOTED

ALIGNMENT TABLE 3

CONTRACT NUMBER
D264571

DRAWING NO. ALN-T3
SHEET NO. 74

IT IS A VIOLATION OF LAW FOR ANY PERSON, UNLESS THEY ARE ACTING UNDER THE DIRECTION OF A LICENSED PROFESSIONAL ENGINEER, ARCHITECT, LANDSCAPE ARCHITECT, OR LAND SURVEYOR, TO ALTER AN ITEM IN ANY WAY. IF AN ITEM BEARING THE STAMP OF A LICENSED PROFESSIONAL IS ALTERED, THE ALTERING ENGINEER, ARCHITECT, LANDSCAPE ARCHITECT, OR LAND SURVEYOR SHALL STAMP THE DOCUMENT AND INCLUDE THE NOTATION "ALTERED BY" FOLLOWED BY THEIR SIGNATURE, THE DATE OF SUCH ALTERATION, AND A SPECIFIC DESCRIPTION OF THE ALTERATION.

NEW YORK STATE OF OPPORTUNITY. Department of Transportation

DESIGN SUPERVISOR S. S. VAIDYA JOB MANAGER R. F. SCHALLER DESIGN V. M. DINATALE CHECK R. F. SCHALLER DRAFTING V. M. DINATALE CHECK R. F. SCHALLER PROJECT MANAGER S. S. VAIDYA

FILE NAME = 581361_CPH_HWY_ALN-T3_.dgn
DATE/TIME = 22-JUN-2021 12:36
USER = cortes

PERMANENT SURVEY MARKER TABLE

PERMANENT SURVEY MARKER TABLE (ITEM 625.06 - PERMANENT SURVEY MARKERS)

PSM NUMBER	BASELINE STATION	OFFSET	SIDE	NORTHING	EASTING	ELEVATION	ITEM 625.06
							1
							1
							1
							1
						TOTAL:	4

NOTE: AFTER FINAL GRADING IS COMPLETED THE ENGINEER IN CHARGE (EIC) WILL CONTACT THE REGIONAL LAND SURVEYOR TO MARK THE LOCATIONS FOR THE PERMANENT SURVEY MARKERS (PSM). PSM CERTIFICATION FORMS (SUPPLIED BY NYSDOT) SHALL BE COMPLETED BY A LAND SURVEYOR OR EXEMPT PROFESSIONAL ENGINEER LICENSED AND REGISTERED IN NEW YORK STATE. UPON FINAL ACCEPTANCE OF THE CERTIFICATION FORMS BY THE REGIONAL LAND SURVEYOR, THE EIC SHALL USE THEM TO COMPLETE THE TABLE ABOVE.

ROW MARKER TABLE

ROW MARKER TABLE (ITEM 625.05 - STEEL PIN & CAP RIGHT-OF-WAY MARKER)

MAP NO	TYPE	BASELINE STATION	OFFSET	SIDE	NORTHING	EASTING	ITEM 625.05 (PIN/CAP)	AS-BUILT BASELINE STATION	AS-BUILT OFFSET
286	FEE	15+45.10	7±	LEFT	1063367.4417	1117829.9175	1		
286	FEE	15+45.30	19.10	LEFT	1063367.3983	1117817.7277	1		
286	FEE	15+81.50	18.30	LEFT	1063403.6071	1117817.8046	1		
286	FEE	15+81.60	37.90	LEFT	1063403.3156	1117798.2065	1		
286	FEE	15+88±	37.70	LEFT	1063409.8402	1117798.2762	1		
287	FEE	16+39±	108.90	LEFT	1063459.2299	1117726.0755	1		
287	FEE	16+40.90	108.80	LEFT	1063461.1879	1117726.1364	1		
287	FEE	16+40.40	85.30	LEFT	1063461.1573	1117749.6417	1		
287	FEE	16+42.70	75.70	LEFT	1063463.6486	1117759.1939	1		
287	FEE	16+42.10	45.20	LEFT	1063463.6578	1117789.6998	1		
287	FEE	16+43.60	22±	LEFT	1063465.6298	1117813.3138	1		
288	FEE	19+00.40	84±	RIGHT	1063724.4883	1117913.8102	1		
288	FEE	19+16±	96.50	RIGHT	1063740.0271	1117925.9078	1		
289	FEE	19+76±	97.00	RIGHT	1063800.7975	1117925.1940	1		
289	FEE	19+91.23	86±	RIGHT	1063815.3395	1117913.9843	1		
290	FEE	35+36±	14.80	LEFT	1065358.3547	1117811.4166	1		
290	FEE	35+41.10	10±	LEFT	1065363.4095	1117816.6168	1		
291	FEE	38+53.50	88±	LEFT	1065675.0662	1117916.9170	1		
291	FEE	38+53.60	91.00	RIGHT	1065675.1401	1117919.8799	1		
293	PE	42+00±	88.90	RIGHT	1066022.4077	1117920.2118	1		
294	FEE	50+01±	52.50	LEFT	1066823.7130	1117784.9535	1		
294	FEE	50+05.60	52.60	LEFT	1066828.5143	1117784.9094	1		
294	FEE	50+06.00	24.00	LEFT	1066828.5813	1117813.5122	1		
294	FEE	50+08.70	20±	LEFT	1066831.2291	1117818.0109	1		
297	PE	58+24.00	14±	LEFT	1067646.1199	1117818.6217	1		
297	PE	58+24.70	64.30	LEFT	1067646.2613	1117768.6729	1		
297	PE	58+58.00	63.90	LEFT	1067679.5637	1117768.7005	1		
297	PE	58+57.40	14±	LEFT	1067679.5226	1117818.6810	1		
310	FEE	57.91.20	85±	RIGHT	1067614.4356	1117918.5657	1		
310	FEE	57+91.10	88.20	RIGHT	1067614.3689	1117921.5391	1		
295	FEE	58+31.60	88.80	RIGHT	1067654.8730	1117921.6862	1		
295	FEE	58+31.70	86±	RIGHT	1067654.9390	1117918.6375	1		
295	PE	58+64.00	86±	RIGHT	1067687.2416	1117918.6948	1		
295	PE	58+63.20	142.10	RIGHT	1067687.0671	1117974.6294	1		
295	PE	58+97.50	142.50	RIGHT	1067721.3695	1117974.6458	1		
295	FEE	58+97.99	103.70	RIGHT	1067721.4215	1117935.8428	1		
295	FEE	59+20.60	87±	RIGHT	1067743.8463	1117918.7951	1		
301	FEE	72+40.60	88±	RIGHT	1069063.3921	1117920.7370	1		
301	FEE	72+38.00	100.40	RIGHT	1069060.8708	1117933.5339	1		
301	FEE	72+58±	100.60	RIGHT	1069080.8284	1117933.6111	1		
302	FEE	73+20±	130.30	RIGHT	1069142.6892	1117962.9311	1		
302	FEE	73+33.50	130.30	RIGHT	1069156.5529	1117962.8459	1		
302	FEE	73+42.20	88±	RIGHT	1069164.9949	1117920.8683	1		
303	PE	85+34.80	15±	RIGHT	1070357.6047	1117822.4089	1		
303	PE	85+79±	12.30	LEFT	1070385.3882	1117778.6271	1		
304	FEE	G 30+03.30	7±	LEFT	1070472.0319	1117703.0265	1		
304	FEE	G 30+81.40	21.10	LEFT	1070511.3179	1117772.2610	1		
304	FEE	G 31+06.70	22±	LEFT	1070519.8728	1117796.0743	1		
305	FEE	90+24±	127.20	RIGHT	1070795.4094	1117937.8218	1		
305	FEE	90+62±	118.40	RIGHT	1070855.3960	1117937.8224	1		
307	PE	100+19±	99.60	LEFT	1071811.5343	1117716.4931	1		
307	PE	102+87.70	105.10	LEFT	1072083.6665	1117713.5192	1		
308	PE	107+70.30	49.40	LEFT	1072564.4376	1117773.1855	1		
308	PE	107+69.30	110.90	LEFT	1072563.2980	1117711.6880	1		
308	PE	111+03±	131.80	LEFT	1072895.4259	1117689.6298	1		
308	PE	111+08±	112.00	LEFT	1072900.3502	1117709.3549	1		
308	PE	108+48.30	95.90	LEFT	1072642.3318	1117726.5086	1		
308	PE	108+47.90	12±	LEFT	1072642.1222	1117810.3685	1		
309	PE	111+80±	109.50	LEFT	1072972.8385	1117710.7167	1		
309	PE	115+62.10	103±	LEFT	1073354.6682	1117711.0426	1		
311-T	CU&O	119+01.40	6±	LEFT	1073695.5163	1117804.6621	1		
311-T	CU&O	119+01.60	23.60	LEFT	1073695.5627	1117787.2438	1		
311-T	CU&O	119+38.00	23.20	LEFT	1073731.9648	1117787.3228	1		
311-T	CU&O	119+38.30	64.40	LEFT	1073731.9016	1117746.1218	1		
311-T	CU&O	120+78.40	63.10	LEFT	1073872.0076	1117746.1866	1		
311-T	CU&O	120+78±	38±	LEFT	1073872.0216	1117770.9197	1		
						TOTAL:	66		

NOTE: ROW MARKER CERTIFICATION FORMS (SUPPLIED BY NYSDOT) SHALL BE COMPLETED BY A LAND SURVEYOR OR EXEMPT PROFESSIONAL ENGINEER LICENSED AND REGISTERED TO PRACTICE LAND SURVEYING IN NEW YORK STATE.

AFFIX SEAL:
ON:

ALTERED BY:
ON:

D264571

STATE OF NEW YORK · ROBERT F. SCHALLER · NO. 082465 · LICENSED PROFESSIONAL ENGINEER

AS-BUILT REVISIONS
DESCRIPTION OF ALTERATIONS:

NY 78, TRANSIT ROAD, S.H. 1334A-1
FRENCH ROAD TO WEHRLE DRIVE
TOWNS OF CHEEKTOWAGA & LANCASTER
VILLAGE OF DEPEW
COUNTY: ERIE REGION: 05

PIN 5813.61
NY 78

BRIDGES

CULVERTS

ALL DIMENSIONS IN ft UNLESS OTHERWISE NOTED

ALIGNMENT TABLE 4

CONTRACT NUMBER
D264571

DRAWING NO. ALN-T4
SHEET NO. 75

IT IS A VIOLATION OF LAW FOR ANY PERSON, UNLESS THEY ARE ACTING UNDER THE DIRECTION OF A LICENSED PROFESSIONAL ENGINEER, ARCHITECT, LANDSCAPE ARCHITECT, OR LAND SURVEYOR, TO ALTER AN ITEM IN ANY WAY. IF AN ITEM BEARING THE STAMP OF A LICENSED PROFESSIONAL IS ALTERED, THE ALTERING ENGINEER, ARCHITECT, LANDSCAPE ARCHITECT, OR LAND SURVEYOR SHALL STAMP THE DOCUMENT AND INCLUDE THE NOTATION "ALTERED BY" FOLLOWED BY THEIR SIGNATURE, THE DATE OF SUCH ALTERATION, AND A SPECIFIC DESCRIPTION OF THE ALTERATION.

NEW YORK STATE OF OPPORTUNITY. Department of Transportation

DESIGN SUPERVISOR S. S. VAIDYA JOB MANAGER R. F. SCHALLER DESIGN V. M. DINATALE CHECK R. F. SCHALLER DRAFTING V. M. DINATALE CHECK R. F. SCHALLER PROJECT MANAGER S. S. VAIDYA

FILE NAME = 581361_CPH_HWY_ALN-T4_.dgn
DATE/TIME = 22-JUN-2021 12:36
USER = ccrites

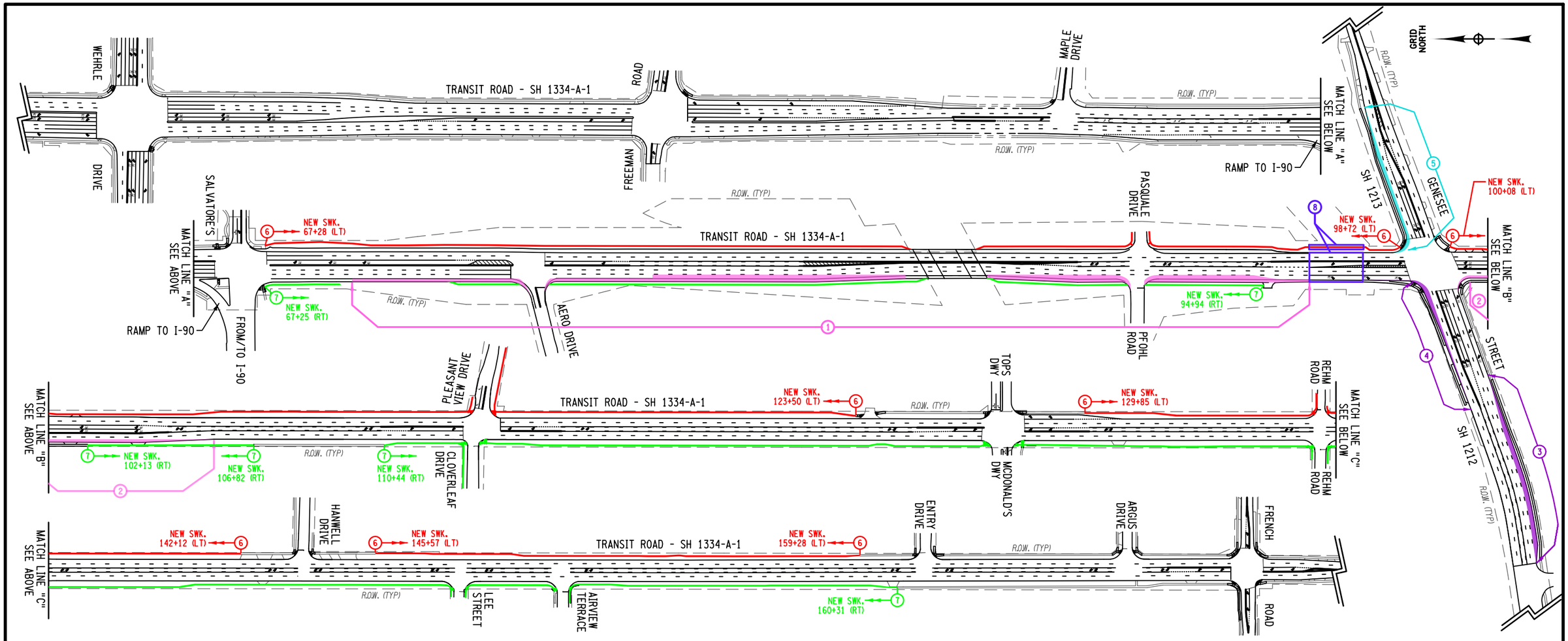

TABLE OF MAINTENANCE JURISDICTION

PART NO	HIGHWAY	LIMITS / (STA)	FEATURES TO BE MAINTAINED	℄ MI.	LANE MI.	AGENCY	AUTHORITY FOR MAINTENANCE
			MAINLINE HIGHWAYS				
1	NY ROUTE 78-TRANSIT ROAD, SH 1334-A-1	STA. 69+69 (RT) TO STA. 96+20 (RT)	PAVEMENT, SHOULDERS, CURBS, STORM DRAINAGE SYSTEM, & TRAFFIC CONTROL DEVICES	0.50	0.50	NYSDOT	HIGHWAY LAW SECTION 12
2	NY ROUTE 78-TRANSIT ROAD, SH 1334-A-1	STA. 100+65 (RT) TO STA. 105+72 (RT)	PAVEMENT, SHOULDERS, CURBS, STORM DRAINAGE SYSTEM, & TRAFFIC CONTROL DEVICES	0.10	0.10	NYSDOT	HIGHWAY LAW SECTION 12
3	NY ROUTE 33-GENESEE STREET, SH 1212	STA. G 276+52 (RT) TO STA. G 281+85 (RT)	PAVEMENT, SHOULDERS, CURBS, STORM DRAINAGE SYSTEM, & TRAFFIC CONTROL DEVICES	0.10	0.10	NYSDOT	HIGHWAY LAW SECTION 12
4	NY ROUTE 33-GENESEE STREET, SH 1212	STA. G 281+10 (LT) TO STA. G 285+00 (LT)	PAVEMENT, SHOULDERS, CURBS, STORM DRAINAGE SYSTEM, & TRAFFIC CONTROL DEVICES	0.07	0.07	NYSDOT	HIGHWAY LAW SECTION 12
5	NY ROUTE 33-GENESEE STREET, SH 1213	STA. G 285+39 (LT) TO STA. G 289+96 (LT)	PAVEMENT, SHOULDERS, CURBS, STORM DRAINAGE SYSTEM, & TRAFFIC CONTROL DEVICES	0.09	0.09	NYSDOT	HIGHWAY LAW SECTION 12
6	NY ROUTE 78-TRANSIT ROAD, SH 1334	VARIOUS LOCATIONS (SEE STATIONING ABOVE)	NEW SIDEWALKS INCLUDING SNOW & ICE CONTROL (INCLUDING SIDEWALK ON B.I.N. 1080550)	-	-	TOWN OF LANCASTER	HIGHWAY LAW SECTION 140, ARTICLE 7, SUBSECTION 18
7	NY ROUTE 78-TRANSIT ROAD, SH 1334	VARIOUS LOCATIONS (SEE STATIONING ABOVE)	NEW SIDEWALKS INCLUDING SNOW & ICE CONTROL (INCLUDING SIDEWALK ON B.I.N. 1030250)	-	-	TOWN OF CHEEKTOWAGA	HIGHWAY LAW SECTION 140, ARTICLE 7, SUBSECTION 18
8	NY ROUTE 78-TRANSIT ROAD, SH 1334	STA. 96+20 TO STA. 97+68 B.I.N. 1030250 B.I.N. 1080550 B.I.N. 1080550	 ENTIRE STRUCTURE ENTIRE STRUCTURE (PROPOSED PED BRIDGE) SNOW & ICE REMOVAL	 - - -	 - - -	 NYSDOT NYSDOT TOWN OF LANCASTER	HIGHWAY LAW SECTION 10 SUBSECTION 25 HIGHWAY LAW SECTION 140, ARTICLE 7, SUBSECTION 18

NOTES:

1. ALL EXISTING SANITARY SEWERS AND OTHER SEWERS NOT DEEMED TO BE PART OF THE PROJECT BY THE COMMISSIONER, WATERMAINS, HYDRANTS AND OTHER MUNICIPALLY OR PRIVATELY OWNED FACILITIES WITHIN THE LIMITS OF THE HIGHWAY ROW WHICH REMAIN IN SERVICE UNCHANGED, AND ALL SUCH FACILITIES RELOCATED OR PROTECTED AS A PART OF THE WORK PERFORMED UNDER THIS PROJECT, WHETHER CROSSING, LOCATED WITHIN OR ADJACENT TO THE ROW, SHALL BE MAINTAINED AS THE CASE MAY BE BY THE MUNICIPALITY OR BY THE AGENCY OR UNIT OWNING OR HAVING CONTROL AND JURISDICTION THEREOF AT NO COST OR EXPENSE TO THE STATE.
2. THIS MAINTENANCE JURISDICTION PLAN AND TABLE DICTATES NEW ADDITIONS TO BE MAINTAINED FOR THE TRANSIT ROAD & GENESEE STREET CORRIDOR SPECIFIC TO THIS CONTRACT ONLY. REFER TO CONTRACT D260326 FOR PREVIOUSLY SUBMITTED MAINTENANCE JURISDICTION INFORMATION.

AFFIX SEAL:
ON:

ALTERED BY:
ON:

D264571
STATE OF NEW YORK
ROBERT F. SCHALLER
NO. 082465
LICENSED PROFESSIONAL ENGINEER

AS-BUILT REVISIONS
DESCRIPTION OF ALTERATIONS:

NY 78, TRANSIT ROAD, S.H. 1334A-1
FRENCH ROAD TO WEHRLE DRIVE
TOWNS OF CHEEKTOWAGA & LANCASTER
VILLAGE OF DEPEW
COUNTY: ERIE REGION: 05

PIN 5813.61
NY 78

BRIDGES

CULVERTS

ALL DIMENSIONS IN ft UNLESS OTHERWISE NOTED

MAINTENANCE JURISDICTION
PLANS, TABLE & NOTES

CONTRACT NUMBER
D264571

DRAWING NO. MJ-1
SHEET NO. 76

IT IS A VIOLATION OF LAW FOR ANY PERSON, UNLESS THEY ARE ACTING UNDER THE DIRECTION OF A LICENSED PROFESSIONAL ENGINEER, ARCHITECT, LANDSCAPE ARCHITECT, OR LAND SURVEYOR, TO ALTER AN ITEM IN ANY WAY. IF AN ITEM BEARING THE STAMP OF A LICENSED PROFESSIONAL IS ALTERED, THE ALTERING ENGINEER, ARCHITECT, LANDSCAPE ARCHITECT, OR LAND SURVEYOR SHALL STAMP THE DOCUMENT AND INCLUDE THE NOTATION "ALTERED BY" FOLLOWED BY THEIR SIGNATURE, THE DATE OF SUCH ALTERATION, AND A SPECIFIC DESCRIPTION OF THE ALTERATION.

NEW YORK STATE OF OPPORTUNITY. Department of Transportation

DESIGN SUPERVISOR S. S. VAIDYA | JOB MANAGER R. F. SCHALLER | DESIGN C. L. CRITES | CHECK R. F. SCHALLER | DRAFTING C. L. CRITES | CHECK R. F. SCHALLER | PROJECT MANAGER S. S. VAIDYA

FILE NAME = 581361_CPH_HWY_MJT-1.dgn
DATE/TIME = 22-JUN-2021 12:36
USER = ccrites

ITEM 606.10 (LF)
BOX BEAM GUIDE RAILING

DWG. NO.	STATION	OFFSET	TO	STATION	OFFSET	SIDE	QTY. (LF)
GRP-1	69+77.0	44.6'	TO	70+61.0	44.7'	LT	84.0
GRP-1	70+61.0	44.7'	TO	70+73.0	45.3'	LT	12.0
GRP-1	70+14.5	50.3'	TO	70+38.5	50.3'	RT	24.0
GRP-1	71+82.5	50.3'	TO	72+00.5	50.3'	RT	18.0
GRP-1	71+94.4	44.5'	TO	73+22.4	44.5'	LT	128.0
GRP-1	73+22.4	44.5'	TO	73+34.4	45.1'	LT	12.0
GRP-2	97+68.5	33.2'	TO	97+98.5	34.0'	LT	30.0
						TOTAL:	308

ITEM 606.100002 (LF)
BOX BEAM GUIDE RAILING (SHOP BENT OR SHOP MITERED)

DWG. NO.	STATION	OFFSET	TO	STATION	OFFSET	SIDE	QTY. (LF)
GRP-1	69+88.5	63.0'	TO	70+14.5	50.3'	RT	30.0
						TOTAL:	30

ITEM 606.120101 (EA)
BOX BEAM END PIECE

DWG. NO.	STATION	OFFSET	TO	STATION	OFFSET	SIDE	QTY. (EA)
GRP-1	69+69.7	44.5'	TO	69+77.0	44.6'	LT	1.0
GRP-1	69+84.0	68.7'	TO	69+88.5	63.0'	RT	1.0
GRP-1	71+87.2	44.5'	TO	71+94.4	44.5'	LT	1.0
GRP-1	72+00.5	50.3'	TO	72+07.7	50.3'	RT	1.0
						TOTAL:	4

ITEM 606.1203 (EA)
BOX BEAM END ASSEMBLY, TYPE III

DWG. NO.	STATION	OFFSET	TO	STATION	OFFSET	SIDE	QTY. (EA)
GRP-1	70+73.0	45.3'	TO	71+23.0	46.6'	LT	1.0
GRP-1	73+34.4	45.1'	TO	73+84.4	46.3'	LT	1.0
GRP-2	97+98.5	34.0'	TO	98+48.5	35.5'	LT	1.0
						TOTAL:	3

ITEM 606.3042 (LF)
SINGLE-SLOPE CONCRETE MEDIAN BARRIER

DWG. NO.	STATION	OFFSET	TO	STATION	OFFSET	SIDE	QTY. (LF)
GRP-1	70+90.5	51.5'	TO	71+30.5	51.5'	RT	40.0
						TOTAL:	40

ITEM 606.73 (LF)
REMOVING & DISPOSING BOX BEAM GUIDE RAILING

DWG. NO.	STATION	OFFSET	TO	STATION	OFFSET	SIDE	QTY. (LF)
GRP-1	70+14.0	47.7'	TO	71+94.0	43.4'	RT	180.0
GRP-1	71+90.2	44.2'	TO	72+98.4	44.7'	LT	108.0
GRP-2	97+68.5	33.2'	TO	97+98.5	34.0'	LT	30.0
						TOTAL:	318

ITEM 606.75 (LF)
REMOVING & DISPOSING CONCRETE BARRIER

DWG. NO.	STATION	OFFSET	TO	STATION	OFFSET	SIDE	QTY. (LF)
GRP-1	70+32.8	51.4'	TO	70+89.9	45.7'	RT	57.3
GRP-1	70+89.9	45.7'	TO	71+21.6	45.0'	RT	31.7
GRP-1	71+21.6	45.0'	TO	71+71.5	49.1'	RT	50.1
						TOTAL:	140

ITEM 606.7920 (EA)
REMOVING & DISPOSING BOX BEAM GUIDE RAILING TURNED DOWN TERMINAL

DWG. NO.	STATION	OFFSET	TO	STATION	OFFSET	SIDE	QTY. (EA)
GRP-1	69+85.7	66.4'	TO	70+14.0	47.7'	RT	1.0
GRP-1	71+82.9	44.1'	TO	71+90.2	44.1'	LT	1.0
GRP-1	71+94.0	43.4'	TO	72+71.4	56.6'	RT	1.0
GRP-1	72+98.4	44.7'	TO	73+75.6	58.4'	LT	1.0
GRP-2	97+98.5	34.0'	TO	98+48.5	50.8'	LT	1.0
						TOTAL:	5

ITEM 606.8805 (EA)
TRANSITION BETWEEN BOX BEAM MEDIAN BARRIER & SINGLE-SLOPE CONCRETE MEDIAN BARRIER

DWG. NO.	STATION	OFFSET	TO	STATION	OFFSET	SIDE	QTY. (EA)
GRP-1	70+38.5	50.3'	TO	70+90.5	51.5'	RT	1.0
GRP-1	71+30.5	51.5'	TO	71+82.5	50.3'	RT	1.0
						TOTAL:	2

ITEM 619.111113 - (PVMS) STANDARD SIZE - LINE OR CHARACTER MATRIX (LED) NOOPTIONAL EQUIPMENT SPECIFIED, CELLULAR COMMUNIC W/NTCIP COMP (EA)

LOCATION	DURATION	QUANTITY
NORTH PROJECT LIMIT	PROJECT DURATION	1
SOUTH PROJECT LIMIT	PROJECT DURATION	1
EAST PROJECT LIMIT	PROJECT DURATION	1
WEST PROJECT LIMIT	PROJECT DURATION	1
1-90 @ TRANSIT RD	PROJECT DURATION	1
	TOTAL (EA):	5

ITEM 553.030001 - TEMP WATER DIVERSION STRUCTURE (EA)

LOCATION	AMOUNT (EA)
DRAINAGE WORK - TRANSIT / GENESEE INTERSECTION	1
DRAINAGE WORK - TRANSIT / FRENCH INTERSECTION	1
TOTAL:	2 EACH

ITEM 204.01 - CONTROLLED LOW STRENGTH MATERIAL (CLSM) (CY)

START STA.	END STA.	LENGTH (FT)	OFFSET	PIPE DIA. (FT)	VOLUME (CY)
GENESEE STREET - STORM PIPES					
G 282+28.0	G 283+32.8	104.8	LT	1.00	3.0
G 283+38.2	G 284+10.2	72.0	LT	1.50	4.7
G 284+14.8	G 284+50.6	35.8	LT	2.00	4.2
G 284+53.5	G 284+71.8	33.5	LT	1.00	1.0
G 285+88.0	G 286+34.4	65.3	LT	1.00	1.9
G 286+38.4	G 286+73.9	35.5	LT	2.50	6.5
G 286+78.6	G 286+97.2	18.6	LT	1.50	1.2
G 287+01.8	G 287+52.6	50.8	LT	1.25	2.3
G 287+57.3	G 288+76.1	118.8	LT	1.00	3.5
				TOTAL:	29.0

ITEM 204.01 - CONTROLLED LOW STRENGTH MATERIAL (CLSM) (CY)

START STA.	END STA.	LENGTH (FT)	OFFSET	PIPE DIA. (FT)	VOLUME (CY)
TRANSIT ROAD - 24" WATER LINE (A.I.P.)					
100+37.9	100+68.8	41.6	RT	2.0	4.8
TRANSIT ROAD - 30" WATER LINE (A.I.P.)					
100+68.8	102+16.1	148.4	RT	2.5	27.0
				TOTAL:	32.0

ITEM 304.00010018 - FINE GRADING OF EXISTING SUBBASE (SF)

CL STATION	CL OFFSET	LENGTH (FT)	WIDTH (FT)	AREA (SF)
PHASE 3A/3B WIDENING				
TRANSIT RD @ GENESEE (NW LEG) - BETWEEN DS REMOVALS				
G 284+48	29.8' LT	31.0	4.3	139.5
G 284+17	30.0' LT		4.7	
G 284+08	30.0' LT	68.0	4.7	265.2
G 283+40	30.0' LT		3.1	
G 283+32	30.0' LT	102.0	3.0	311.1
G 282+30	29.8' LT		3.1	
PHASE 3D WIDENING				
GENESEE FROM TRANSIT RD TO ANIMAL HOSPITAL (NE LEG) - BETWEEN DS REMOVALS				
G 286+41	28.7' LT	30.0	3.9	120.0
G 286+71	28.4' LT		4.1	
G 286+81	28.2' LT	14.0	4.0	49.7
G 286+95	28.1' LT		3.1	
G 287+04	28.0' LT	47.0	3.1	145.7
G 287+51	27.6' LT		3.1	
G 287+59	27.5' LT	115.0	3.0	350.8
G 288+74	26.4' LT		3.1	
			TOTAL (SF):	1382.00

ITEM 490.30 - MISCELLANEOUS MILLING OF BITUMINOUS CONCRETE (SY)

LOCATION	FROM STATION	TO STATION	LENGTH (LF)	WIDTH (LF)	MILL DEPTH (IN)	AREA (SY)
TRANSIT ROAD - WEST SIDE						
FREEMAN	FE 8+77	FE 9+24	47.0	42.2	1.5	220.38
FREEMAN	FE 9+24	FE 9+54	30.0	63.8	1.5	212.67
AERO DR	A 0+52	A 1+00	48.0	59.1	1.5	315.20
AERO DR	A 1+00	A 1+24	24.0	35.0	1.5	93.33
PFOHL RD	P 0+49	P 0+77	28.0	46.0	1.5	143.11
BIN 1030250 ACCESS ROAD			15.0	26.0	1.5	43.33
CLOVERLEAF DR	P 0+30	P 0+51	21.0	38.5	1.5	89.83
CLOVERLEAF DR	P 0+51	P 0+86	35.0	30.2	1.5	117.44
MCDONALD'S DRIVEWAY			20.0	72.3	1.5	160.67
MCDONALD'S DRIVEWAY			42.0	23.5	1.5	109.67
REHM ROAD	RW 0+29	RW 0+48	19.0	55.8	1.5	117.80
REHM ROAD	RW 0+48	RW 0+64	16.0	31.7	1.5	56.36
LEE STREET	L 0+29	L 0+53	24.0	49.6	1.5	132.27
AIRVIEW TERR.	AV 0+29	AV 0+54	25.0	48.6	1.5	135.00
FRENCH ROAD	FW 0+22	FW 0+58	36.0	52.5	1.5	210.00
FRENCH ROAD	FW 0+58	FW 1+67	109.0	36.3	1.5	439.63
TRANSIT ROAD - EAST SIDE						
FREEMAN	FE 10+55	FE 11+37	82.0	76.8	1.5	699.73
MAPLE DR	M 0+37	M 0+89	52.0	51.6	1.5	298.13
SALVATORE'S DWY			78.0	39.8	1.5	344.93
PASQUALE DRIVE			26.0	47.3	1.5	136.64
PLEASANTVIEW DR	PV 0+30	PV 0+91	61.0	49.2	1.5	333.47
PLEASANTVIEW DR	PV 0+91	PV 1+19	28.0	40.4	1.5	125.69
TOPS DRIVEWAY			8.0	65.0	1.5	57.78
TOPS DRIVEWAY			57.0	23.5	1.5	148.83
REHM ROAD	RE 0+32	RE 0+60	28.0	38.0	1.5	118.22
HANWELL PLACE	H 0+31	H 0+63	32.0	42.8	1.5	152.18
ENTRY DRIVE	E 0+33	E 0+63	30.0	45.3	1.5	151.00
ARGUS DRIVE	AR 0+35	AR 0+68	33.0	42.9	1.5	157.30
FRENCH ROAD	FE 0+35	FE 0+78	43.0	62.2	1.5	297.18
FRENCH ROAD	FE 0+78	FE 1+84	106.0	30.0	1.5	353.33
					TOTAL (SY):	5972.00

ITEM 490.10 - PRODUCTION MILLING OF BITUMINOUS CONCRETE (SY)

LOCATION	MILL DEPTH (IN)	AREA (SY)
SEE TABLE OF WIDTHS ON DWG. TYP-7 FOR STATIONS & DIMENSIONS	1.5	115679
	TOTAL (SY):	115679.0

ITEM 304.00010018 - FINE GRADING OF EXISTING SUBBASE (SF)

CL STATION	CL OFFSET	LENGTH (FT)	WIDTH (FT)	AREA (SF)
TRANSIT RD - EAST SIDE - MIDBLOCK REMOVALS				
148+35.2	LT	19.8	2.75	54.4
148+55.0	LT		2.75	
151+24.0	LT	17.4	2.75	47.8
151+41.4	LT		2.75	
TRANSIT RD - WEST SIDE - MIDBLOCK REMOVALS				
160+73.1	RT	16.0	2.75	44.0
160+89.1	RT		2.75	
166+84.9	RT	17.0	2.75	46.8
167+01.9	RT		2.75	
			TOTAL (SF):	194.00

AFFIX SEAL:
ON:

D264571
STATE OF NEW YORK
ROBERT F. SCHALLER
NO. 082465
LICENSED PROFESSIONAL ENGINEER

ALTERED BY:
ON:

AS-BUILT REVISIONS
DESCRIPTION OF ALTERATIONS:

NY 78, TRANSIT ROAD, S.H. 1334A-1
FRENCH ROAD TO WEHRLE DRIVE
TOWNS OF CHEEKTOWAGA & LANCASTER
VILLAGE OF DEPEW
COUNTY: ERIE REGION: 05

PIN 5813.61
NY 78
UTILITY QUALITY LEVEL D

BRIDGES

CULVERTS

ALL DIMENSIONS IN ft UNLESS OTHERWISE NOTED

MISCELLANEOUS TABLES - SHEET 1

CONTRACT NUMBER
D264571

DRAWING NO. MST-1
SHEET NO. 77

IT IS A VIOLATION OF LAW FOR ANY PERSON, UNLESS THEY ARE ACTING UNDER THE DIRECTION OF A LICENSED PROFESSIONAL ENGINEER, ARCHITECT, LANDSCAPE ARCHITECT, OR LAND SURVEYOR, TO ALTER AN ITEM IN ANY WAY. IF AN ITEM BEARING THE STAMP OF A LICENSED PROFESSIONAL IS ALTERED, THE ALTERING ENGINEER, ARCHITECT, LANDSCAPE ARCHITECT, OR LAND SURVEYOR SHALL STAMP THE DOCUMENT AND INCLUDE THE NOTATION "ALTERED BY" FOLLOWED BY THEIR SIGNATURE, THE DATE OF SUCH ALTERATION, AND A SPECIFIC DESCRIPTION OF THE ALTERATION.

NEW YORK STATE OF OPPORTUNITY. Department of Transportation

PROJECT MANAGER S. S. VAIDYA
CHECK R. F. SCHALLER
DRAFTING C. L. CRITES
CHECK R. F. SCHALLER
DESIGN C. L. CRITES
JOB MANAGER R. F. SCHALLER
DESIGN SUPERVISOR S. S. VAIDYA
FILE NAME = 581361_CPH.HWY.MST-1.dgn
DATE/TIME = 22-JUN-2021 12:36
USER = corites

ITEM 609.0401 - CAST IN PLACE CONC CURB VF150 (LF)

CL STA	OFFSET	COMMENTS	LENGTH (LF)
72+58.8 TO 74+03.3	55.1' RT 55.2' RT	ALONG SB RT TURN LANE AT AERO DRIVE	145.0
97+68.0 TO G 281+10.4	43.9' RT 31.9' LT	NW QUADRANT OF TRANSIT & GENESEE	532.0
G 284+25.2 TO 105+72.1	44.0' RT 30.1' RT	SW QUADRANT OF TRANSIT & GENESEE	568.0
97+68.0 TO 97+92.5	32.0' LT 32.2' LT	NE QUADRANT OF TRANSIT & GENESEE	25.0
98+60.6 TO G 289+96.2	33.8' LT 27.5' LT	NE QUADRANT OF TRANSIT & GENESEE	432.0
G 285+97.1 TO 101+74.6	32.7' RT 32.0' LT	SE QUADRANT OF TRANSIT & GENESEE	233.0
G 276+51.8 TO G 281+84.4	32.3' RT 44.0' RT	GENESEE ST RIGHT TURN LANE EXTENSION	543.0
169+45.9 TO FW 1+67.3	23.0' RT 14.7' RT	NW QUADRANT OF TRANSIT & FRENCH	167.0
170+67.5 TO FE 1+83.7	35.5' LT 15.3' RT	SE QUADRANT OF TRANSIT & FRENCH	171.0
		TOTAL (LF):	2816.0

ITEM 609.0401 - CAST IN PLACE CONC CURB VF150 (LF)

CL STA	OFFSET	COMMENTS	LENGTH (LF)
TRANSIT ROAD - EAST SIDE - MIDBLOCK CROSSING REMOVALS			
148+35.2 148+55.0	LT LT	INSTALL FULL HEIGHT CURB	19.8
151+24.0 151+41.4	LT LT	INSTALL FULL HEIGHT CURB	17.4
TRANSIT ROAD - WEST SIDE - MIDBLOCK CROSSING REMOVALS			
160+73.1 160+89.1	RT RT	INSTALL FULL HEIGHT CURB	16.0
166+84.9 167+01.9	RT RT	INSTALL FULL HEIGHT CURB	17.0
		TOTAL (LF):	71.0

REFER TO DWG. CRT-1 FOR ADDITIONAL QUANTITIES

ITEM 609.0407 - CAST IN PLACE CONC CURB T100 (LF)

CL STA	OFFSET	COMMENTS	LENGTH (LF)
97+92.5 TO 98+56.0	LT LT	NE QUADRANT OF TRANSIT & GENESEE	63.5
		TOTAL (LF):	64.0

ITEM 552.17 - SHIELDS & SHORNING (SF)

STATION	LENGTH (X2) (FT)	WIDTH (FT)	DEPTH (FT)	AVG. DEPTH (FT)	AREA (SF)	PHASE
GENESEE STREET NORTH MAINLINE - 15" PIPE TRENCH:						PHASE 3A & 3B
G 282+39		4.50	4.5		20.4	
	96.0			4.6	440.6	
G 283+33		4.50	4.6		20.9	
GENESEE STREET NORTH MAINLINE - 18" PIPE TRENCH:						
G 283+37		5.5	4.8		26.6	
	77.8			4.9	382.7	
G 284+14		5.5	5.0		27.5	
GENESEE STREET NORTH MAINLINE - 18" PIPE TRENCH:						
G 284+13		5.5	5.4		29.6	
	11.0			5.3	58.6	
G 284+17		5.5	5.3		29.0	
GENESEE STREET NORTH MAINLINE - 24" PIPE TRENCH:						
G 284+20		6.3	5.5		34.8	
	29.2			5.8	167.9	
G 284+49		6.3	6.0		38.0	
GENESEE STREET NORTH MAINLINE - 24" PIPE TRENCH:						
G 284+51		6.3	5.6		35.7	
	9.0			5.8	52.2	
G 284+53		6.3	6.0		37.8	
TRANSIT ROAD NEW DS TO EXISTING DS - 15" PIPE TRENCH:						PHASE 3C
102+15.9		4.50	4.6		20.6	
	6.0			4.7	27.9	
102+20.3		4.50	4.7		21.3	
TRANSIT ROAD NEW DS TO EXISTING DS - 15" PIPE TRENCH:						
102+68		4.50	4.6		20.6	
	6.0			4.7	28.0	
102+68		4.50	4.8		21.4	
TRANSIT ROAD NEW DS TO EXISTING DS - 15" PIPE TRENCH:						
104+21		4.50	4.6		20.6	
	4.0			4.6	18.5	
104+21		4.50	4.7		21.0	
GENESEE STREET NORTH MAINLINE - 30" PIPE TRENCH:						PHASE 3D
G 286+35		7.0	6.7		46.9	
	4.0			6.9	27.4	
G 286+35		7.0	7.0		49.1	
GENESEE STREET NORTH MAINLINE - 30" PIPE TRENCH:						
G 286+35		7.0	6.7		46.9	
	35.0			6.6	230.0	
G 286+71		7.0	6.4		45.1	
GENESEE STREET NORTH MAINLINE - 30" PIPE TRENCH:						
G 286+76		7.00	6.4		45.1	
	8.0			6.5	52.1	
G 286+76		7.00	6.58		46.1	
GENESEE STREET NORTH MAINLINE - 18" PIPE TRENCH:						
G 286+77		5.50	6.4		35.3	
	21.0			5.7	119.3	
G 286+98		5.50	5.0		27.2	
GENESEE STREET NORTH MAINLINE - 15" PIPE TRENCH:						
G 287+01		4.50	5.0		22.3	
	52.0			4.8	249.9	
G 287+53		4.50	4.7		21.0	
GENESEE STREET NORTH MAINLINE - 15" PIPE TRENCH:						
G 287+56		4.50	4.7		21.0	
	100.0			4.7	468.5	
G 288+39		4.50	4.7		21.2	
GENESEE STREET / PROPOSED DS / TYPE Q (LT)						PHASE 3A & 3B
G 282+38	8.33	8.17	5.40		178.2	
GENESEE STREET / PROPOSED DS / TYPE A (LT)						
G 283+36	8.33	8.33	5.70		190.0	
GENESEE STREET / PROPOSED DS / TYPE F (LT)						
G 284+18	9.33	9.33	6.30		235.2	
GENESEE STREET / PROPOSED DS / TYPE F (LT)						
G 284+51	9.33	9.33	6.50		242.7	
				(SHEET 1) SUBTOTAL:	4023.00 SF	

ITEM 552.17 - SHIELDS & SHORNING (SF)

STATION	LENGTH (X2) (FT)	WIDTH (FT)	DEPTH (FT)	AVG. DEPTH (FT)	AREA (SF)	PHASE
TRANSIT ROAD / PROPOSED DS / TYPE A (RT)						PHASE 3C
100+43.7	8.33	8.33	5.60		186.7	
TRANSIT ROAD / PROPOSED DS / TYPE Q (RT)						
102+20.3	8.33	8.17	5.40		178.2	
TRANSIT ROAD / PROPOSED DS / TYPE Q (RT)						
102+68.3	8.33	8.17	5.50		181.5	
TRANSIT ROAD / PROPOSED DS / TYPE Q (RT)						
104+20.8	8.33	8.17	4.90		161.7	
GENESEE STREET / PROPOSED DS / TYPE A (LT)						PHASE 3D
G 285+89	8.33	8.33	4.80		160.0	
GENESEE STREET / PROPOSED DS / TYPE J (LT)						
G 286+35	10.33	9.33	7.70		302.8	
GENESEE STREET / PROPOSED DS / TYPE F (LT)						
G 286+75	9.33	9.33	7.40		276.3	
GENESEE STREET / PROPOSED DS / TYPE Q (LT)						
G 287+00	8.33	8.17	5.80		191.4	
GENESEE STREET / PROPOSED DS / TYPE Q (LT)						
G 287+55	8.33	8.17	5.50		181.5	
GENESEE STREET / PROPOSED DS / TYPE Q (LT)						
G 288+57	8.33	8.17	5.40		178.2	
FRENCH ROAD / PROPOSED DS / TYPE A (RT)						PHASE 6A
FW 1+06	8.67	8.67	4.33		150.2	
				(SHEET 2) SUBTOTAL:	2149.00 SF	
				(SHEET 1 & 2) TOTAL:	6171.00 SF	

REFER TO DWGS. CRT-1, WLNT-2 & DTB-3 FOR ADDITIONAL QUANTITIES

ITEM 605.1501 - PERFORATED CORRUGATED POLYETHYLENE UNDERDRAIN TUBING, 4 INCH DIA. (LF)

FROM STA	OFFSET	TO	TO STA	OFFSET	LENGTH (LF)
TRANSIT ROAD - PHASE 1 WIDENING					
69+69.0	RT	TO	A 1+24.1	RT	542.0
TRANSIT ROAD - PHASE 1 WIDENING					
75+02.0	RT	TO	84+99.6	RT	1049.0
TRANSIT ROAD - PHASE 1 WIDENING					
87+27.9	RT	TO	96+20.0	RT	892.1
TRANSIT ROAD @ GENESEE (NW QUADRANT)					
G 281+10.4	LT	TO	97+68.0	RT	532.0
TRANSIT ROAD @ GENESEE (SW QUADRANT)					
G 284+25.3	RT	TO	105+72.1	RT	568.0
TRANSIT ROAD @ GENESEE (NE QUADRANT)					
98+50.0	LT	TO	G 289+96.2	LT	443.0
TRANSIT ROAD @ GENESEE (SE QUADRANT)					
G 285+97.1	RT	TO	101+74.6	LT	233.0
GENESEE ST RIGHT TURN LANE EXTENSION					
G 280+25.0	RT	TO	G 281+84.4	RT	160.0
TRANSIT ROAD @ FRENCH (NW QUADRANT)					
FW 0+22.3	RT	TO	FW 1+67.3	RT	167.0
TRANSIT ROAD @ FRENCH (SE QUADRANT)					
FE 0+35.2	RT	TO	FE 1+83.8	RT	179.0
				TOTAL:	4766.0

607.88020005 - PORTABLE SNOW FENCE, 8 FOOT HEIGHT (LF)

FROM STA	OFFSET	TO	TO STA	OFFSET	LENGTH (LF)
TRANSIT ROAD					
71+20.5	158.3' RT	TO	74+48.5	158.6' RT	328.0
75+58.7	178.5' RT	TO	78+70.0	157.6' RT	312.0
78+10.3	93.9' RT	TO	83+85.7	120.4' RT	576.0
83+57.9	155.1' RT	TO	85+89.8	148.9' RT	232.0
				TOTAL (LF):	1448.0

ITEM 605.1001 - UNDERDRAIN FILTER TYPE 2 (CY)

LENGTH (FT)	WIDTH (FT)	DEPTH (FT)	AVG. DEPTH (FT)	VOLUME (CY)
4" UNDERDRAIN TRENCH (LENGTH FROM ITEM 605.1501):				
4766.0	1.33	1.16	1.16	272.3
TOTAL:				273.00 CY

ITEM 203.24010017 - SHOULDER BACKUP MATERIAL (TON)

START STATION	SIDE	END STATION	DISTANCE (LF)	AREA (CF)	QTY (TON)
69+69	RT	71+50	181	181	9.1
72+59	RT	74+28	169	169	8.5
A 0+41	RT	A 0+93	52	52	2.6
A 0+41	LT	A 0+82	41	41	2.1
75+18	RT	85+00	982	982	49.1
87+28	RT	91+18	390	390	19.5
P 0+60	RT	P 0+77	17	17	0.9
91+62	RT	96+20	458	458	22.9
97+68	RT	98+90	122	122	6.1
NW CORNER OF TRANSIT & GENESEE			62	62	3.1
NE CORNER OF TRANSIT & GENESEE			82	82	4.1
SE CORNER OF TRANSIT & GENESEE			69	69	3.4
SW CORNER OF TRANSIT & GENESEE			59	59	3.0
100+19	LT	101+74	155	155	7.8
100+65	RT	105+72	507	507	25.4
NW CORNER OF TRANSIT & FRENCH			56	56	2.8
SE CORNER OF TRANSIT & FRENCH			73	73	3.7
G 276+52	RT	G 281+84	532	532	26.6
G 281+10	LT	G 284+58	348	348	17.4
G 286+30	LT	G 289+96	366	366	18.3
FW 0+59	RT	FW 1+67	108	108	5.4
FE 0+80	RT	FE 1+84	104	104	5.2
NOTE: USED 0.05 TON/CF			TOTALS:	4932.5	247.0 TONS

AFFIX SEAL:
ON:

ALTERED BY:
ON:

D264571

STATE OF NEW YORK · ROBERT F. SCHALLER · LICENSED PROFESSIONAL ENGINEER · NO. 082465

AS-BUILT REVISIONS
DESCRIPTION OF ALTERATIONS:

NY 78, TRANSIT ROAD, S.H. 1334A-1
FRENCH ROAD TO WEHRLE DRIVE
TOWNS OF CHEEKTOWAGA & LANCASTER
VILLAGE OF DEPEW
COUNTY: ERIE REGION: 05

PIN 5813.61
NY 78
UTILITY QUALITY LEVEL D

BRIDGES

CULVERTS

ALL DIMENSIONS IN ft UNLESS OTHERWISE NOTED

MISCELLANEOUS TABLES - SHEET 2

CONTRACT NUMBER D264571

DRAWING NO. MST-2
SHEET NO. 78

IT IS A VIOLATION OF LAW FOR ANY PERSON, UNLESS THEY ARE ACTING UNDER THE DIRECTION OF A LICENSED PROFESSIONAL ENGINEER, ARCHITECT, LANDSCAPE ARCHITECT, OR LAND SURVEYOR, TO ALTER AN ITEM IN ANY WAY. IF AN ITEM BEARING THE STAMP OF A LICENSED PROFESSIONAL IS ALTERED, THE ALTERING ENGINEER, ARCHITECT, LANDSCAPE ARCHITECT, OR LAND SURVEYOR SHALL STAMP THE DOCUMENT AND INCLUDE THE NOTATION "ALTERED BY" FOLLOWED BY THEIR SIGNATURE, THE DATE OF SUCH ALTERATION, AND A SPECIFIC DESCRIPTION OF THE ALTERATION.

NEW YORK STATE OF OPPORTUNITY. Department of Transportation

PROJECT MANAGER S. S. VAIDYA
CHECK R. F. SCHALLER
DRAFTING C. L. CRITES
CHECK R. F. SCHALLER
DESIGN C. L. CRITES
JOB MANAGER R. F. SCHALLER
DESIGN SUPERVISOR S. S. VAIDYA
FILE NAME = 581361_CPH_HWY_MST-2.dgn
DATE/TIME = 22-JUN-2021 12:37
USER = ccrites

TABLE A

ITEM 608.0101 - CONCRETE SIDEWALKS & DRIVEWAYS (CY)

FROM STA	O/S	TO STA	O/S	LENGTH (LF)	WIDTH (LF)	DEPTH (LF)	VOLUME (CY)
SIDEWALK (TRANSIT ROAD - EAST SIDE)							
67+28	49.5' LT	67+54	56.3 LT	25.9	5.0	0.33	1.6
67+54	56.3 LT	68+82	60.0 LT	127.8	5.0	0.33	7.8
68+82	60.0 LT	69+69	55.7 LT	87.1	5.0	0.33	5.3
69+69	55.7 LT	70+20	50.8 LT	50.8	5.0	0.33	3.1
70+20	50.8 LT	84+91	48.6 LT	1470.9	5.0	0.33	89.9
84+91	48.6 LT	85+14	40.3 LT	23.0	5.0	0.33	1.4
86+97	40.1 LT	87+19	48.9 LT	21.6	5.0	0.33	1.3
87+19	48.9 LT	91+08	49.1 LT	389.2	5.0	0.33	23.8
PASQUALE DRIVE - NORTHEAST				55.0	5.0	0.33	3.4
PASQUALE DRIVE - SOUTHEAST				62.0	5.0	0.33	3.8
92+03	49.0 LT	95+17	47.3 LT	313.5	5.0	0.33	19.2
95+17	47.3 LT	95+32	43.6 LT	15.1	5.0	0.33	0.9
95+32	43.6 LT	95+87	40.2 LT	55.4	5.0	0.33	3.4
95+87	40.2 LT	96+08	47.3 LT	21.4	5.0	0.33	1.3
96+08	47.3 LT	96+19	47.1 LT	10.5	5.0	0.33	0.6
97+70	47.1 LT	97+76	47.1 LT	5.7	5.0	0.33	0.3
97+76	47.1 LT	97+87	39.3 LT	10.9	5.0	0.33	0.7
97+87	39.3 LT	98+46	39.8 LT	59.3	5.0	0.33	3.6
98+46	39.8 LT	98+72	48.5 LT	26.1	5.0	0.33	1.6
100+29	42.2 LT	100+98	43.0 LT	68.9	5.0	0.50	6.4
100+98	43.0 LT	101+36	39.0 LT	38.2	5.0	0.33	2.3
101+36	39.0 LT	101+83	39.3 LT	46.5	5.0	0.33	2.8
101+83	39.3 LT	101+97	46.7 LT	14.6	5.0	0.50	1.4
101+97	46.7 LT	105+14	39.3 LT	316.9	5.0	0.33	19.4
105+14	39.3 LT	105+92	46.7' LT	77.9	5.0	0.33	4.8
105+92	46.7' LT	106+04	46.7' LT	12.0	5.0	0.33	0.7
106+04	46.7' LT	106+96	45.1 LT	92.0	5.0	0.50	8.5
106+96	45.1 LT	107+68	47.1 LT	72.2	5.0	0.33	4.4
107+68	47.1 LT	108+02	47.3 LT	34.2	5.0	0.50	3.2
108+02	47.3 LT	108+12	37.6 LT	9.6	5.0	0.33	0.6
108+12	37.6 LT	109+81	46.5 LT	169.0	5.0	0.50	15.6
109+81	46.5 LT	110+57	46.4 LT	76.0	5.0	0.33	4.6
110+57	46.4 LT	111+04	46.4 LT	47.0	5.0	0.50	4.4
111+04	46.4 LT	111+73	46.0 LT	69.0	5.0	0.33	4.2
111+73	46.0 LT	112+35	46.2 LT	62.4	5.0	0.50	5.8
112+35	46.2 LT	112+71	47.1 LT	36.0	5.0	0.33	2.2
113+57	47.0 LT	115+67	46.6 LT	210.2	5.0	0.33	12.8
115+67	46.6 LT	116+20	47.0 LT	52.8	5.0	0.50	4.9
116+20	47.0 LT	118+13	46.6 LT	193.0	5.0	0.33	11.8
118+13	46.6 LT	118+38	46.8 LT	25.0	5.0	0.50	2.3
118+38	46.8 LT	120+88	47.2 LT	250.0	5.0	0.33	15.3
120+88	47.2 LT	121+11	46.6 LT	23.0	5.0	0.50	2.1
121+11	46.6 LT	122+80	46.7 LT	169.2	5.0	0.33	10.3
122+80	46.7 LT	123+45	37.8 LT	64.8	5.0	0.33	4.0
123+45	37.8 LT	123+49	37.6 LT	4.0	5.0	0.33	0.2
129+65	47.4 LT	129+85	46.5 LT	20.5	5.0	0.33	1.3
129+85	46.5 LT	130+00	46.0 LT	15.0	5.0	0.50	1.4
130+00	46.0 LT	130+20	46.4 LT	20.0	5.0	0.33	1.2
130+20	46.4 LT	130+33	46.6 LT	13.0	5.0	0.50	1.2
130+33	46.6 LT	130+77	46.5 LT	44.0	5.0	0.33	2.7
130+77	46.5 LT	130+89	46.5 LT	12.0	5.0	0.50	1.1
130+89	46.5 LT	131+54	46.3 LT	65.1	5.0	0.33	4.0
131+54	46.3 LT	131+74	46.5 LT	19.9	5.0	0.50	1.8
131+74	46.5 LT	132+38	39.2 LT	64.0	5.0	0.33	3.9
132+38	39.2 LT	132+60	39.6 LT	22.0	5.0	0.50	2.0
132+60	39.6 LT	133+21	39.4 LT	61.0	5.0	0.33	3.7
133+21	39.4 LT	133+62	39.5 LT	41.0	5.0	0.50	3.8
133+62	39.5 LT	134+54	39.9 LT	92.0	5.0	0.33	5.6
134+54	39.9 LT	134+97	39.6 LT	43.0	5.0	0.50	4.0
134+97	39.6 LT	135+43	39.7 LT	46.0	5.0	0.33	2.8
135+43	39.7 LT	135+53	39.6 LT	10.0	5.0	0.50	0.9
135+53	39.6 LT	136+04	39.9 LT	51.0	5.0	0.33	3.1

ITEM 608.0101 CONTINUES ON TABLE B

TABLE B

ITEM 608.0101 - CONCRETE SIDEWALKS & DRIVEWAYS (CY)

FROM STA	O/S	TO STA	O/S	LENGTH (LF)	WIDTH (LF)	DEPTH (LF)	VOLUME (CY)
SIDEWALK (TRANSIT ROAD - EAST SIDE)							
136+04	39.9 LT	136+12	43.0 LT	8.0	5.0	0.33	0.5
136+67	47.0 LT	138+42	47.0 LT	175.5	5.0	0.33	10.7
138+42	47.0 LT	138+71	47.6 LT	29.0	5.0	0.50	2.7
138+71	47.6 LT	140+00	47.6 LT	128.7	5.0	0.33	7.9
140+00	47.6 LT	140+37	47.2 LT	36.9	5.0	0.50	3.4
140+37	47.2 LT	140+92	46.7 LT	55.2	5.0	0.33	3.4
140+92	46.7 LT	141+22	47.3 LT	30.2	5.0	0.50	2.8
141+22	47.3 LT	141+64	47.0 LT	41.5	5.0	0.33	2.5
141+64	47.0 LT	141+84	47.1 LT	20.5	5.0	0.50	1.9
141+84	47.1 LT	142+12	47.2 LT	28.0	5.0	0.33	1.7
142+12	47.2 LT	143+00	47.2 LT	88.0	5.0	0.50	8.1
143+00	47.2 LT	143+52	47.3 LT	52.0	5.0	0.33	3.2
143+52	47.3 LT	143+56	48.0 LT	4.0	5.0	0.33	0.2
144+18	48.2 LT	145+32	48.7 LT	114.0	5.0	0.50	10.6
145+32	48.7 LT	145+57	49.2 LT	25.3	5.0	0.33	1.5
145+57	49.2 LT	145+93	49.0 LT	35.7	5.0	0.50	3.3
145+93	49.0 LT	146+88	48.5 LT	95.0	5.0	0.33	5.8
146+88	48.5 LT	147+23	48.4 LT	34.6	5.0	0.50	3.2
147+23	48.4 LT	147+45	47.3 LT	22.4	5.0	0.33	1.4
147+45	47.3 LT	147+62	46.6 LT	17.0	5.0	0.50	1.6
147+62	46.6 LT	149+03	47.2 LT	141.0	5.0	0.33	8.6
149+03	47.2 LT	149+57	47.2 LT	54.0	5.0	0.50	5.0
149+57	47.2 LT	149+80	47.1 LT	23.0	5.0	0.33	1.4
149+80	47.1 LT	149+96	45.7 LT	16.0	5.0	0.33	1.0
149+96	45.7 LT	151+54	41.6 LT	158.0	5.0	0.50	14.6
151+54	41.6 LT	151+88	42.1 LT	34.0	5.0	0.50	3.1
151+88	42.1 LT	153+15	42.1 LT	127.0	5.0	0.50	11.8
153+15	42.1 LT	153+39	41.1 LT	24.0	5.0	0.50	2.2
153+39	41.1 LT	153+77	41.4 LT	38.0	5.0	0.50	3.5
153+77	41.4 LT	153+90	41.6 LT	13.0	5.0	0.50	1.2
153+90	41.6 LT	154+23	43.3 LT	33.0	5.0	0.50	3.1
154+23	43.3 LT	155+48	39.2 LT	125.0	5.0	0.50	11.6
155+48	39.2 LT	156+11	39.7 LT	63.0	5.0	0.50	5.8
156+11	39.7 LT	156+31	41.5 LT	20.0	5.0	0.50	1.9
156+31	41.5 LT	158+89	42.4 LT	258.0	5.0	0.50	23.9
158+89	42.4 LT	159+28	44.8 LT	39.0	5.0	0.50	3.6
SIDEWALK (TRANSIT ROAD - WEST SIDE)							
67+25	65.1 RT	67+51	58.6 RT	26.4	5.0	0.33	1.6
67+51	58.6 RT	69+36	57.1 RT	41.2	5.0	0.33	2.5
72+24	51.6 RT	72+64	62.4 RT	40.0	5.0	0.33	2.4
72+64	62.4 RT	74+08	63.1 RT	22.1	5.0	0.33	1.4
74+08	63.1 RT	74+30	61.1 RT	22.5	5.0	0.33	1.4
75+15	57.1 RT	77+22	60.3 RT	207.4	5.0	0.33	12.7
77+22	60.3 RT	77+36	56.9 RT	14.3	5.0	0.33	0.9
77+36	56.9 RT	78+32	56.1 RT	95.8	5.0	0.33	5.9
78+32	56.1 RT	82+38	58.3 RT	405.9	5.0	0.33	24.8
82+38	58.3 RT	85+00	48.9 RT	262.1	5.0	0.33	16.0
85+00	48.9 RT	85+33	48.8 RT	32.7	5.0	0.33	2.0
85+33	48.8 RT	85+58	40.6 RT	25.5	5.0	0.33	1.6
87+38	40.5 RT	87+57	46.8' RT	19.7	5.0	0.33	1.2
87+57	46.8' RT	89+78	58.8 RT	220.4	5.0	0.33	13.5
89+78	58.8 RT	91+16	57.4 RT	138.3	5.0	0.33	8.5
91+65	57.1 RT	94+43	58.6 RT	278.5	5.0	0.33	17.0
94+43	58.6 RT	94+56	61.6 RT	13.0	5.0	0.33	0.8
94+56	61.6 RT	94+94	61.7 RT	37.4	5.0	0.33	2.3
97+68	46.8 RT	98+42	50.1 RT	74.0	5.0	0.33	4.5
98+42	50.1 RT	98+97	56.9 RT	55.4	5.0	0.33	3.4
100+49	56.9 RT	100+68	46.9 RT	19.3	5.0	0.33	1.2
100+68	46.9 RT	101+58	47.1 RT	90.0	5.0	0.33	5.5
101+58	47.1 RT	101+88	46.9 RT	30.0	5.0	0.50	2.8
101+88	46.9 RT	103+50	46.6 RT	162.0	5.0	0.33	9.9
103+50	46.6 RT	103+76	46.8 RT	26.2	5.0	0.50	2.4
103+76	46.8 RT	104+18	46.5 RT	41.8	5.0	0.33	2.6
104+18	46.5 RT	104+44	46.5 RT	26.0	5.0	0.50	2.4
104+44	46.5 RT	106+39	46.1 RT	195.0	5.0	0.33	11.9
106+39	46.1 RT	106+67	46.0 RT	28.0	5.0	0.50	2.6
106+67	46.0 RT	106+82	46.1 RT	15.0	5.0	0.33	0.9
110+47	46.2 RT	110+81	39.8 RT	33.8	5.0	0.33	2.1

ITEM 608.0101 CONTINUES ON TABLE C

TABLE C

ITEM 608.0101 - CONCRETE SIDEWALKS & DRIVEWAYS (CY)

FROM STA	O/S	TO STA	O/S	LENGTH (LF)	WIDTH (LF)	DEPTH (LF)	VOLUME (CY)
SIDEWALK (TRANSIT ROAD - WEST SIDE)							
110+81	39.8 RT	111+33	39.8 RT	52.5	5.0	0.50	4.9
111+33	39.8 RT	112+50	39.8 RT	117.0	5.0	0.50	10.8
112+50	39.8 RT	112+54	39.6 RT	4.0	5.0	0.33	0.2
113+31	39.6 RT	113+55	41.1 RT	23.8	5.0	0.33	1.5
113+55	41.1 RT	113+89	40.9 RT	33.8	5.0	0.33	2.1
113+89	40.9 RT	114+18	41.0 RT	29.0	5.0	0.50	2.7
114+18	41.0 RT	114+26	41.0 RT	8.0	5.0	0.33	0.5
114+26	41.0 RT	114+78	45.3 RT	52.0	5.0	0.33	3.2
114+78	45.3 RT	121+41	38.9 RT	663.0	5.0	0.33	40.5
121+41	38.9 RT	121+57	45.8 RT	16.0	5.0	0.50	1.5
121+57	45.8 RT	123+87	45.7 RT	230.0	5.0	0.33	14.1
123+87	45.7 RT	124+08	41.2 RT	21.0	5.0	0.33	1.3
124+08	41.2 RT	124+32	41.0 RT	24.0	5.0	0.33	1.5
124+32	41.0 RT	124+58	45.8 RT	26.0	5.0	0.33	1.6
124+58	45.8 RT	126+95	46.0 RT	237.0	5.0	0.33	14.5
126+95	46.0 RT	127+00	44.5 RT	5.1	5.0	0.33	0.3
128+19	42.0 RT	128+86	42.4 RT	66.6	5.0	0.33	4.1
128+86	42.4 RT	130+48	44.3 RT	162.0	5.0	0.50	15.0
130+48	44.3 RT	130+62	44.6 RT	14.0	5.0	0.33	0.9
130+62	44.6 RT	130+93	45.0 RT	31.0	5.0	0.50	2.9
130+93	45.0 RT	131+94	45.4 RT	101.0	5.0	0.33	6.2
131+94	45.4 RT	132+26	46.9 RT	32.0	5.0	0.33	2.0
132+26	46.9 RT	132+42	47.0 RT	16.0	5.0	0.33	1.0
132+42	47.0 RT	132+83	46.7 RT	41.0	5.0	0.50	3.8
132+83	46.7 RT	133+82	45.6 RT	99.0	5.0	0.33	6.1
133+82	45.6 RT	136+03	45.5 RT	221.0	5.0	0.50	20.5
136+67	45.6 RT	137+51	45.6 RT	83.8	5.0	0.50	7.8
137+51	45.6 RT	138+02	45.5 RT	51.0	5.0	0.33	3.1
138+02	45.5 RT	139+61	45.5 RT	159.0	5.0	0.50	14.7
139+61	45.5 RT	140+42	45.5 RT	81.0	5.0	0.33	5.0
140+42	45.5 RT	140+85	38.6 RT	43.0	5.0	0.33	2.6
140+85	38.6 RT	142+02	38.6 RT	117.0	5.0	0.50	10.8
142+02	38.6 RT	142+24	38.5 RT	22.0	5.0	0.50	2.0
142+24	38.5 RT	142+65	38.6 RT	41.0	5.0	0.33	2.5
142+65	38.6 RT	142+80	38.6 RT	15.0	5.0	0.50	1.4
142+80	38.6 RT	143+47	38.7 RT	67.0	5.0	0.33	4.1
143+47	38.7 RT	145+22	38.6 RT	175.0	5.0	0.50	16.2
145+22	38.6 RT	145+32	38.8 RT	10.0	5.0	0.33	0.6
145+32	38.8 RT	145+92	39.1 RT	60.0	5.0	0.50	5.6
145+92	39.1 RT	146+22	39.1 RT	30.0	5.0	0.33	1.8
146+22	39.1 RT	146+47	39.0 RT	25.0	5.0	0.50	2.3
146+47	39.0 RT	146+78	39.1 RT	31.0	5.0	0.33	1.9
146+78	39.1 RT	147+64	39.2 RT	86.0	5.0	0.50	8.0
147+64	39.2 RT	147+84	40.0 RT	20.0	5.0	0.50	1.9
147+84	40.0 RT	147+92	45.1 RT	8.0	5.0	0.50	0.7
148+53	39.2 RT	148+74	39.2 RT	20.8	5.0	0.33	1.3
148+74	39.2 RT	149+62	39.5 RT	88.1	5.0	0.50	8.2
149+62	39.5 RT	149+70	39.2 RT	8.0	5.0	0.33	0.5
149+70	39.2 RT	150+12	39.2 RT	42.0	5.0	0.50	3.9
150+12	39.2 RT	150+60	39.1 RT	48.0	5.0	0.33	2.9
150+60	39.1 RT	150+77	46.3 RT	17.0	5.0	0.33	1.0
151+48	37.3 RT	152+37	37.5 RT	88.6	5.0	0.50	8.2
152+37	37.5 RT	152+85	40.6 RT	48.6	5.0	0.33	3.0
152+85	40.6 RT	154+34	40.4 RT	148.8	5.0	0.33	9.1
154+34	40.4 RT	154+89	40.5 RT	55.0	5.0	0.50	5.1
154+89	40.5 RT	156+66	40.2 RT	177.0	5.0	0.33	10.8
156+66	40.2 RT	156+93	39.3 RT	27.4	5.0	0.33	1.7
156+93	39.3 RT	157+11	39.3 RT	17.6	5.0	0.50	1.6
157+11	39.3 RT	157+63	39.0 RT	52.0	5.0	0.33	3.2
157+63	39.0 RT	159+56	38.7 RT	193.0	5.0	0.50	17.9
159+56	38.7 RT	160+10	44.2 RT	54.0	5.0	0.33	3.3
160+10	44.2 RT	160+31	44.0 RT	21.0	5.0	0.50	1.9

ITEM 608.0101 CONTINUES ON TABLE D

TABLE D

ITEM 608.0101 - CONCRETE SIDEWALKS & DRIVEWAYS (CY)

FROM STA	O/S	TO STA	O/S	LENGTH (LF)	WIDTH (LF)	DEPTH (LF)	VOLUME (CY)
SIDEWALK (GENESEE STREET)							
G 276+58	45.3 RT	G 277+00	52.4 RT	42.2	5.0	0.33	2.6
G 277+00	52.4 RT	G 279+65	52.2 RT	264.8	5.0	0.33	16.2
G 279+65	52.2 RT	G 280+22	50.3 RT	56.8	5.0	0.33	3.5
G 280+22	50.3 RT	G 281+68	50.2 RT	146.1	5.0	0.33	8.9
G 281+26	41.8 LT	G 281+39	40.1 LT	12.7	5.0	0.33	0.8
G 281+39	40.1 LT	G 281+79	43.0 LT	40.0	5.0	0.50	3.7
G 281+79	43.0 LT	G 283+16	45.0 LT	136.9	5.0	0.33	8.4
G 283+16	45.0 LT	G 283+65	46.3 LT	49.2	5.0	0.33	3.0
G 283+65	46.3 LT	G 284+16	48.3 LT	50.4	5.0	0.33	3.1
G 283+65	46.3 LT	G 284+57	54.5 LT	92.1	5.0	0.33	5.6
G 286+12	50.0 LT	G 286+30	45.2 LT	17.4	5.0	0.33	1.1
G 286+30	45.2 LT	G 287+18	45.3 LT	88.4	5.0	0.33	5.4
G 287+18	45.3 LT	G 287+42	45.4 LT	24.0	5.0	0.50	2.2
G 287+42	45.4 LT	G 287+97	45.1 LT	54.6	5.0	0.33	3.3
G 287+97	45.1 LT	G 288+44	45.6 LT	47.8	5.0	0.33	2.9
G 288+44	45.6 LT	G 288+91	41.9 LT	46.6	5.0	0.33	2.8
G 288+91	41.9 LT	G 289+21	39.6 LT	30.0	5.0	0.50	2.8
G 289+21	39.6 LT	G 289+30	38.5 LT	9.0	5.0	0.33	0.6
G 289+30	38.5 LT	G 289+97	40.8 LT	66.5	5.0	0.33	4.1
SIDEWALK (CLOVERLEAF DRIVE)							
C 0+42	23.5 RT	C 0+50	21.7 RT	7.9	5.0	0.33	0.5
C 0+50	21.7 RT	C 1+65	23.6 RT	115.1	5.0	0.33	7.0
SIDEWALK (PLEASANT VIEW DRIVE)							
PV 0+50	34.8 LT	PV 0+65	32.2 LT	15.5	5.0	0.33	0.9
PV 0+65	32.2 LT	PV 0+89	32.2 LT	24.2	5.0	0.33	1.5
PV 0+55	33.7 RT	PV 0+67	31.8 RT	12.0	5.0	0.33	0.7
PV 0+67	31.8 RT	PV 2+35	35.1 RT	168.7	5.0	0.33	10.3
SIDEWALK (REHM ROAD - WEST LEG)							
RW 0+58	24.5 RT	RW 0+83	24.1 RT	24.6	5.0	0.50	2.3
RW 0+55	20.1 LT	RW 0+84	19.8 LT	29.4	5.0	0.50	2.7
SIDEWALK (REHM ROAD - EAST LEG)							
RE 0+54	18.1 LT	RE 0+64	14.0 LT	9.9	5.0	0.33	0.6
RE 0+64	14.0 LT	RE 1+01	14.5 LT	37.6	5.0	0.33	2.3
RE 0+56	17.0 RT	RE 0+67	15.4 RT	10.8	5.0	0.33	0.7
SIDEWALK (LEE STREET)							
L 0+53	19.4 LT	L 0+74	18.4 LT	21.2	5.0	0.33	1.3
L 0+58	21.9 RT	L 0+72	21.8 RT	14.7	5.0	0.33	0.9
SIDEWALK (AIRVIEW STREET)							
AV 0+68	19.3 LT	L 0+89	19.6 LT	20.3	5.0	0.33	1.2
SIDEWALK (FRENCH ROAD - WEST LEG)							
FW 0+58	25.0 RT	FW 1+04	25.3 RT	45.4	5.0	0.33	2.8
FW 1+04	25.3 RT	FW 1+13	23.1 RT	9.5	5.0	0.33	0.6
FW 1+13	23.1 RT	FW 1+32	22.4 RT	18.8	5.0	0.33	1.1
						TABLE A - SUBTOTAL:	372.7 CY
						TABLE B - SUBTOTAL:	347.2 CY
						TABLE C - SUBTOTAL:	339.8 CY
						TABLE D - SUBTOTAL:	118.4 CY
						COMBINED SIDEWALK TOTAL:	1179.0 CY

ITEM 608.0101 CONTINUES ON TABLE E - SEE DWG. MST-4

AFFIX SEAL:
ON:

ALTERED BY:
ON:

AS-BUILT REVISIONS
DESCRIPTION OF ALTERATIONS:

NY 78, TRANSIT ROAD, S.H. 1334A-1
FRENCH ROAD TO WEHRLE DRIVE
TOWNS OF CHEEKTOWAGA & LANCASTER
VILLAGE OF DEPEW
COUNTY: ERIE REGION: 05

581361
NY 78
UTILITY QUALITY LEVEL D

BRIDGES

CULVERTS

ALL DIMENSIONS IN ft UNLESS OTHERWISE NOTED

MISCELLANEOUS TABLES - SHEET 3

CONTRACT NUMBER
D264571

DRAWING NO. MST-3
SHEET NO. 79

IT IS A VIOLATION OF LAW FOR ANY PERSON, UNLESS THEY ARE ACTING UNDER THE DIRECTION OF A LICENSED PROFESSIONAL ENGINEER, ARCHITECT, LANDSCAPE ARCHITECT, OR LAND SURVEYOR, TO ALTER AN ITEM IN ANY WAY. IF AN ITEM BEARING THE STAMP OF A LICENSED PROFESSIONAL IS ALTERED, THE ALTERING ENGINEER, ARCHITECT, LANDSCAPE ARCHITECT, OR LAND SURVEYOR SHALL STAMP THE DOCUMENT AND INCLUDE THE NOTATION "ALTERED BY" FOLLOWED BY THEIR SIGNATURE, THE DATE OF SUCH ALTERATION, AND A SPECIFIC DESCRIPTION OF THE ALTERATION.

NEW YORK STATE OF OPPORTUNITY. Department of Transportation

DESIGN SUPERVISOR S. S. VAIDYA
JOB MANAGER R. F. SCHALLER
DESIGN C. L. CRITES
CHECK R. F. SCHALLER
DRAFTING C. L. CRITES
CHECK R. F. SCHALLER
PROJECT MANAGER S. S. VAIDYA

FILE NAME = 581361_CPH_HWY_MST-3.dgn
DATE/TIME = 22-JUN-2021 12:37
USER = coritES

TABLE E

ITEM 608.0101 - CONCRETE SIDEWALKS & DRIVEWAYS (CY)										
FROM STA	O/S	TO STA	O/S	APRON MATERIAL	WIDTH (BACK OF CURB) (LF)	WIDTH (FRONT OF SIDEWALK) (LF)	AVG WIDTH (LF)	LEN (LF)	DEP (LF)	VOL (CY)
DRIVEWAY APRONS (TRANSIT ROAD - EAST SIDE)										
100+21	32.9' LT	100+60	32.9' LT	CONCRETE	34.2	23.2	28.7	5.7	0.50	3.00
100+67	32.8' LT	101+06	32.7' LT	CONCRETE	35.4	24.1	29.7	5.7	0.50	3.13
101+74	32.7' LT	102+05	32.6' LT	CONCRETE	30.5	18.7	24.6	3.6	0.50	1.64
142+10	31.7' LT	142+61	31.8' LT	CONCRETE	50.8	40.4	45.6	12.7	0.50	10.69
142+95	31.8' LT	143+32	32.0' LT	CONCRETE	37.8	26.0	31.9	12.6	0.50	7.46
144+38	31.7' LT	144+66	31.7' LT	CONCRETE	27.5	27.3	27.4	14.1	0.50	7.16
144+90	31.7' LT	145+35	31.7' LT	CONCRETE	45.5	49.7	47.6	13.9	0.50	12.29
DRIVEWAY APRONS (TRANSIT ROAD - WEST SIDE)										
101+60	38.9' RT	101+90	39.0' RT	CONCRETE	31.4	31.0	31.2	5.5	0.50	3.17
103+49	39.5' RT	103+77	39.1' RT	CONCRETE	28.6	26.7	27.7	4.7	0.50	2.42
130+58	30.8' RT	130+99	30.7' RT	CONCRETE	39.1	31.4	35.2	11.6	0.50	7.54
142+58	29.2' RT	142+89	29.2' RT	CONCRETE	31.7	16.7	24.2	7.2	0.50	3.21
143+41	29.3' RT	143+72	29.3' RT	CONCRETE	30.9	21.5	26.2	7.1	0.50	3.46
160+03	27.5' RT	160+36	27.4' RT	CONCRETE	33.2	18.8	26.0	14.5	0.50	7.00
DRIVEWAY APRONS (GENESEE ST)										
G 281+28	33.2' LT	G 281+87	34.7' LT	CONCRETE	58.24	42.16	50.20	7.68	0.50	7.14
G 287+16	38.5' LT	G 287+43	38.6' LT	CONCRETE	26.73	23.66	25.20	4.25	0.50	1.98
G 288+90	37.0' LT	G 289+22	34.2' LT	CONCRETE	36.25	30.97	33.61	3.70	0.50	2.30
									(TABLE E) SUBTOTAL:	84.0 CY
									(TABLES A - E) TOTAL:	1263.0 CY

ITEM 608.0101 - END
(SEE TABLES A-D ON DWG. MST-3)

TABLE 1

ITEM 608.020102 - HOT MIX ASPHALT (HMA) SIDEWALKS, DRIVEWAYS, BIKE PATHS & VEGETATION CONTROL STRIPS (TON)							
FROM STATION	O/S	TO STATION	O/S	LENGTH (LF)	WIDTH (LF)	DEPTH (LF)	WEIGHT (TONS)
DRIVEWAY TIE-INS (TRANSIT ROAD - EAST SIDE)							
100+29	41.7' LT	100+50	41.3' LT	21.00	2.0	0.50	1.5
100+50	41.3' LT	100+74	41.4' LT	24.00	2.0	0.50	1.7
100+74	41.4' LT	100+97	41.9' LT	23.00	2.0	0.50	1.7
101+82	38.2' LT	101+97	37.8' LT	15.00	2.0	0.50	1.1
106+04	45.5' LT	106+49	46.2' LT	45.00	2.0	0.50	3.2
106+62	46.3' LT	106+96	46.0' LT	34.00	2.0	0.50	2.4
107+68	46.1' LT	108+02	46.3' LT	34.00	2.0	0.50	2.4
108+12	46.2' LT	109+81	45.8' LT	169.00	2.0	0.50	12.2
110+56	46.1' LT	111+04	46.1' LT	48.00	2.0	0.50	3.5
111+73	45.4' LT	112+35	46.4' LT	62.00	2.0	0.50	4.5
115+67	46.2' LT	116+21	46.6' LT	54.00	2.0	0.50	3.9
118+13	46.5' LT	118+40	46.4' LT	27.00	2.0	0.50	1.9
120+88	46.8' LT	121+11	47.2' LT	23.00	2.0	0.50	1.7
129+85	47.7' LT	130+00	47.3' LT	15.00	2.0	0.50	1.1
130+20	46.7' LT	130+33	47.5' LT	13.00	2.0	0.50	0.9
130+77	47.4' LT	130+89	47.5' LT	12.00	2.0	0.50	0.9
131+54	46.8' LT	131+74	46.8' LT	20.00	2.0	0.50	1.4
132+38	40.3' LT	132+60	39.4' LT	22.00	2.0	0.50	1.6
133+22	40.0' LT	133+62	39.1' LT	40.00	2.0	0.50	2.9
134+54	39.3' LT	134+97	38.8' LT	43.00	2.0	0.50	3.1
135+43	39.0' LT	135+53	38.8' LT	10.00	2.0	0.50	0.7
138+42	45.7' LT	138+71	45.5' LT	29.00	2.0	0.50	2.1
140+00	44.7' LT	140+37	45.1' LT	37.00	2.0	0.50	2.7
140+92	45.4' LT	141+22	45.2' LT	30.00	2.0	0.50	2.2
141+63	44.8' LT	141+84	45.2' LT	21.00	2.0	0.50	1.5
142+12	44.9' LT	142+56	44.7' LT	44.00	2.0	0.50	3.2
142+56	45.5' LT	143+00	45.3' LT	44.00	2.0	0.50	3.2
143+00	44.9' LT	143+28	44.9' LT	28.00	2.0	0.50	2.0
143+28	46.5' LT	145+58	45.7' LT	230.00	2.0	0.50	16.5
145+58	45.7' LT	145+93	46.3' LT	35.00	2.0	0.50	2.5
146+88	45.5' LT	147+23	46.0' LT	35.00	2.0	0.50	2.5
147+45	44.3' LT	147+62	44.3' LT	17.00	2.0	0.50	1.2
149+03	44.3' LT	151+88	38.2' LT	285.00	2.0	0.50	20.5
151+88	38.2' LT	153+39	38.0' LT	151.00	2.0	0.50	10.9
153+39	38.0' LT	159+28	37.8' LT	589.00	2.0	0.50	42.4
DRIVEWAY TIE-INS (TRANSIT ROAD - WEST SIDE)							
101+57	50.7' RT	101+88	47.8' RT	31.00	2.0	0.50	2.2
103+50	47.4' RT	103+76	47.3' RT	26.00	2.0	0.50	1.9
104+17	47.3' RT	104+44	47.1' RT	27.00	2.0	0.50	1.9
106+39	46.8' RT	106+67	46.5' RT	28.00	2.0	0.50	2.0
111+33	40.2' RT	112+50	39.7' RT	117.00	2.0	0.50	8.4
113+90	41.0' RT	114+18	41.0' RT	28.00	2.0	0.50	2.0
121+41	45.3' RT	121+56	45.5' RT	15.00	2.0	0.50	1.1
128+84	41.5' RT	130+47	43.1' RT	163.00	2.0	0.50	11.7
130+61	43.6' RT	130+93	44.3' RT	32.00	2.0	0.50	2.3
132+41	47.4' RT	132+83	46.5' RT	42.00	2.0	0.50	3.0
133+82	46.0' RT	136+03	47.0' RT	221.00	2.0	0.50	15.9
136+68	46.8' RT	137+51	46.5' RT	83.00	2.0	0.50	6.0
138+02	46.8' RT	139+61	47.3' RT	159.00	2.0	0.50	11.4
140+85	40.3' RT	142+00	40.8' RT	115.00	2.0	0.50	8.3
142+02	40.8' RT	142+24	40.3' RT	22.00	2.0	0.50	1.6
142+65	40.8' RT	142+80	40.6' RT	15.00	2.0	0.50	1.1
143+47	41.1' RT	145+22	41.3' RT	175.00	2.0	0.50	12.6
145+32	41.6' RT	145+92	41.4' RT	60.00	2.0	0.50	4.3
146+22	41.2' RT	146+47	41.6' RT	25.00	2.0	0.50	1.8
146+77	41.8' RT	147+85	42.9' RT	108.00	2.0	0.50	7.8
148+74	41.9' RT	149+62	42.3' RT	88.00	2.0	0.50	6.3
149+69	42.5' RT	150+11	42.2' RT	42.00	2.0	0.50	3.0
151+48	40.2' RT	152+37	40.1' RT	89.00	2.0	0.50	6.4
154+34	44.2' RT	154+89	44.0' RT	55.00	2.0	0.50	4.0
156+93	43.7' RT	157+11	43.7' RT	18.00	2.0	0.50	1.3
157+64	44.0' RT	159+56	44.1' RT	192.00	2.0	0.50	13.8
160+10	48.9' RT	160+31	50.0' RT	21.00	2.0	0.50	1.5
DRIVEWAY TIE-INS (GENESEE STREET)							
G 281+40	42.6 LT	G 281+78	44.6' LT	38.00	2.0	0.50	2.7
G 286+10	51.6' LT	G 287+17	48.0' LT	107.00	2.0	0.50	7.7
G 287+17	48.0' LT	G 287+42	48.3' LT	25.00	2.0	0.50	1.8
G 288+91	46.7' LT	G 289+21	44.5' LT	30.00	2.0	0.50	2.2
DRIVEWAY TIE-INS (REHM ROAD - WEST LEG)							
RW 0+55	20.0' LT	RW 0+95	19.8' LT	40.00	2.0	0.50	1.5
RW 0+58	24.5' RT	RW 0+83	24.1' RT	25.00	2.0	0.50	0.9
NOTE: USED 143.9 LBS/CF						(TABLE 1) SUBTOTAL:	329.0 TON

ITEM 608.020102 CONTINUES ON TABLE 2

TABLE 2

ITEM 608.020102 - HOT MIX ASPHALT (HMA) SIDEWALKS, DRIVEWAYS, BICYCLE PATHS AND VEGETATION CONTROL STRIPS (TON)										
FROM STATION	O/S	TO STATION	O/S	APRON MATERIAL	WIDTH (BACK OF CURB) (LF)	WIDTH (FRONT OF SIDEWALK) (LF)	AVG WIDTH (LF)	LENGTH (LF)	DEPTH (LF)	WEIGHT (TONS)
DRIVEWAY APRONS (TRANSIT ROAD - EAST SIDE)										
105+98	29.9' LT	106+96	30.2' LT	ASPHALT	100.0	92.5	96.2	13.5	0.50	46.88
107+64	30.1' LT	108+03	29.9' LT	ASPHALT	39.2	34.4	36.8	13.8	0.50	18.27
108+12	29.9' LT	108+40	30.1' LT	ASPHALT	31.2	28.6	29.9	13.2	0.50	14.22
108+61	29.9' LT	108+92	29.9' LT	ASPHALT	30.5	30.5	30.5	13.7	0.50	14.98
109+34	30.0' LT	109+82	30.0' LT	ASPHALT	46.6	46.6	46.6	13.3	0.50	22.31
110+08	30.1' LT	110+36	30.4' LT	ASPHALT	28.0	37.0	32.5	11.7	0.50	13.69
110+57	30.4' LT	111+02	30.4' LT	ASPHALT	44.8	45.5	45.2	13.3	0.50	21.56
111+75	30.5' LT	112+34	30.5' LT	ASPHALT	59.1	60.8	60.0	13.2	0.50	28.45
115+61	30.6' LT	116+34	30.7' LT	ASPHALT	78.8	56.2	67.5	13.3	0.50	32.20
118+09	30.7' LT	118+54	30.7' LT	ASPHALT	48.3	30.9	39.6	13.9	0.50	19.74
120+82	30.7' LT	121+18	30.8' LT	ASPHALT	44.4	23.6	34.0	11.9	0.50	14.60
129+83	42.0' LT	130+03	40.0' LT	ASPHALT	21.3	18.0	19.6	3.9	0.50	2.79
130+18	38.5' LT	130+36	36.5' LT	ASPHALT	25.7	12.7	19.2	6.5	0.50	4.50
130+73	32.8' LT	130+95	31.2' LT	ASPHALT	26.7	12.7	19.7	11.6	0.50	8.20
131+54	31.2' LT	131+77	31.3' LT	ASPHALT	26.2	19.6	22.9	12.4	0.50	10.25
132+32	31.2' LT	132+66	31.2' LT	ASPHALT	33.7	24.4	29.0	6.3	0.50	6.62
133+19	31.2' LT	133+66	31.2' LT	ASPHALT	48.5	42.5	45.5	5.7	0.50	9.36
134+49	31.2' LT	135+02	31.1' LT	ASPHALT	60.2	46.5	53.3	5.2	0.50	10.07
135+36	31.2' LT	135+58	31.2' LT	ASPHALT	33.1	12.3	22.7	5.1	0.50	4.14
138+39	30.8' LT	138+78	30.4' LT	ASPHALT	46.4	31.5	38.9	12.5	0.50	17.50
140+00	30.4' LT	140+44	30.3' LT	ASPHALT	52.3	37.4	44.9	12.1	0.50	19.52
140+90	30.2' LT	141+27	30.2' LT	ASPHALT	40.9	31.2	36.1	12.5	0.50	16.17
141+62	30.1' LT	141+91	30.0' LT	ASPHALT	42.2	21.1	31.7	11.8	0.50	13.41
145+52	29.3' LT	145+99	29.3' LT	ASPHALT	58.4	34.7	46.5	13.2	0.50	22.11
146+81	29.1' LT	147+28	28.9' LT	ASPHALT	54.8	34.7	44.8	13.4	0.50	21.58
147+45	29.0' LT	147+66	28.9' LT	ASPHALT	21.7	17.0	19.3	13.2	0.50	9.18
148+99	28.6' LT	149+57	28.4' LT	ASPHALT	60.8	55.3	58.0	12.9	0.50	26.95
149+95	28.4' LT	150+36	28.2' LT	ASPHALT	43.2	34.9	39.1	8.0	0.50	11.23
151+53	28.2' LT	151+90	28.1' LT	ASPHALT	37.6	35.6	36.6	7.9	0.50	10.46
153+38	27.9' LT	153+79	27.8 LT	ASPHALT	40.3	38.5	39.4	7.6	0.50	10.74
155+52	27.8' LT	156+11	27.7' LT	ASPHALT	59.8	59.7	59.7	7.1	0.50	15.16
157+16	27.8' LT	157+61	27.7' LT	ASPHALT	44.8	44.8	44.8	6.8	0.50	11.02
157+97	27.7' LT	158+24	27.6' LT	ASPHALT	27.0	27.0	27.0	6.9	0.50	6.72
158+75	27.7' LT	159+08	27.7' LT	ASPHALT	33.0	33.1	33.1	7.1	0.50	8.49
DRIVEWAY APRONS (TRANSIT ROAD - WEST SIDE)										
104+06	31.5' RT	104+49	31.0' RT	ASPHALT	37.1	28.2	32.7	7.3	0.50	8.52
106+30	30.8' RT	106+79	30.8' RT	ASPHALT	47.8	29.1	38.5	12.8	0.50	17.75
111+33	30.5' RT	111+63	30.4' RT	ASPHALT	31.9	29.3	30.6	6.9	0.50	7.64
112+21	30.4' RT	112+51	30.4' RT	ASPHALT	30.0	27.7	28.9	6.9	0.50	7.13
113+80	30.4' RT	114+18	30.4' RT	ASPHALT	38.3	31.0	34.6	8.2	0.50	10.16
121+37	34.0' RT	121+63	33.7' RT	ASPHALT	28.2	16.9	22.6	8.2	0.50	6.69
129+90	33.8' RT	130+41	29.8' RT	ASPHALT	51.3	51.3	51.3	10.6	0.50	19.51
132+28	29.7' RT	132+96	29.8' RT	ASPHALT	68.9	44.6	56.8	14.0	0.50	28.60
133+78	29.8' RT	134+19	29.9' RT	ASPHALT	41.0	37.9	39.4	13.0	0.50	18.50
134+97	29.9 RT	135+37	29.7' RT	ASPHALT	40.0	40.2	40.1	13.7	0.50	19.72
137+05	30.0' RT	137+52	30.0' RT	ASPHALT	47.2	47.2	47.2	2.6	0.50	4.38
138+21	30.2' RT	138+53	30.2' RT	ASPHALT	33.0	33.0	33.0	14.0	0.50	16.67
139+00	30.4' RT	139+37	30.4' RT	ASPHALT	36.8	36.8	36.8	14.0	0.50	18.47
140+85	30.6' RT	141+20	30.7' RT	ASPHALT	34.9	35.5	35.2	7.0	0.50	8.80
142+06	30.9' RT	142+24	31.0' RT	ASPHALT	17.5	17.4	17.4	7.0	0.50	4.41
143+81	31.4' RT	144+05	31.3' RT	ASPHALT	25.1	25.5	25.3	7.0	0.50	6.41
144+14	31.4' RT	144+44	31.5' RT	ASPHALT	29.7	29.7	29.7	7.0	0.50	7.47
144+85	31.6' RT	145+15	31.6' RT	ASPHALT	30.1	30.1	30.1	7.0	0.50	7.55
145+30	31.7' RT	145+92	31.8' RT	ASPHALT	63.3	61.6	62.5	6.9	0.50	15.60
146+19	31.9' RT	146+47	32.0' RT	ASPHALT	34.5	25.9	30.2	6.9	0.50	7.50
146+77	32.0' RT	147+17	32.1' RT	ASPHALT	44.6	41.1	42.9	6.9	0.50	10.71
149+17	32.5' RT	149+47	32.5' RT	ASPHALT	29.7	29.7	29.7	7.0	0.50	7.47
149+82	32.6' RT	150+11	32.7' RT	ASPHALT	29.2	29.2	29.2	7.0	0.50	7.33
151+61	32.9' RT	151+91	33.0' RT	ASPHALT	30.5	30.5	30.5	5.0	0.50	5.47
152+50	33.1' RT	152+70	33.1' RT	ASPHALT	26.4	13.9	20.1	6.6	0.50	4.74
154+33	33.3' RT	154+93	33.3' RT	ASPHALT	62.1	56.9	59.5	8.2	0.50	17.57
156+93	33.5' RT	157+11	33.4' RT	ASPHALT	19.4	19.4	19.4	7.8	0.50	5.44
157+81	33.3' RT	158+18	33.2' RT	ASPHALT	38.1	37.7	37.9	8.1	0.50	11.12
158+64	33.2' RT	159+01	33.3' RT	ASPHALT	37.3	37.9	37.6	8.3	0.50	11.27
									(TABLE 2) SUBTOTAL:	846.00
NOTE: USED 143.9 LBS/CF									(TABLE 1 - 2) TOTAL:	1175.00

ITEM 608.020102 - END

AFFIX SEAL:
ON:

ALTERED BY:
ON:

D264571
STATE OF NEW YORK
ROBERT F. SCHALLER
NO. 082465
LICENSED PROFESSIONAL ENGINEER

AS-BUILT REVISIONS
DESCRIPTION OF ALTERATIONS:

NY 78, TRANSIT ROAD, S.H. 1334A-1
FRENCH ROAD TO WEHRLE DRIVE
TOWNS OF CHEEKTOWAGA & LANCASTER
VILLAGE OF DEPEW
COUNTY: ERIE REGION: 05

PIN5813.61
NY 78
UTILITY QUALITY LEVEL D

BRIDGES

CULVERTS

ALL DIMENSIONS IN ft UNLESS OTHERWISE NOTED

MISCELLANEOUS TABLES - SHEET 4

CONTRACT NUMBER
D264571

DRAWING NO. MST-4
SHEET NO. 80

IT IS A VIOLATION OF LAW FOR ANY PERSON, UNLESS THEY ARE ACTING UNDER THE DIRECTION OF A LICENSED PROFESSIONAL ENGINEER, ARCHITECT, LANDSCAPE ARCHITECT, OR LAND SURVEYOR, TO ALTER AN ITEM IN ANY WAY. IF AN ITEM BEARING THE STAMP OF A LICENSED PROFESSIONAL IS ALTERED, THE ALTERING ENGINEER, ARCHITECT, LANDSCAPE ARCHITECT, OR LAND SURVEYOR SHALL STAMP THE DOCUMENT AND INCLUDE THE NOTATION "ALTERED BY" FOLLOWED BY THEIR SIGNATURE, THE DATE OF SUCH ALTERATION, AND A SPECIFIC DESCRIPTION OF THE ALTERATION.

NEW YORK STATE OF OPPORTUNITY. Department of Transportation

DESIGN SUPERVISOR S. S. VAIDYA
JOB MANAGER R. F. SCHALLER
DESIGN C. L. CRITES
CHECK R. F. SCHALLER
DRAFTING C. L. CRITES
CHECK R. F. SCHALLER
PROJECT MANAGER S. S. VAIDYA
FILE NAME = 581361_CPH_HWY_MST-4.dgn
DATE/TIME = 22-JUN-2021 12:37
USER = cortes

TABLE 1

ITEM 610.1402 - TOPSOIL (ROADSIDE) (CY)							
FROM STATION	O/S	TO STATION	O/S	LENGTH (LF)	AVG WIDTH (LF)	DEPTH (LF)	VOLUME (CY)
TRANSIT ROAD - EAST SIDE							
67+28	49.9' LT	85+20	43.9' LT	1792.00	14.4	0.33	316.3
85+20	43.9' LT	91+08	49.1' LT	588.00	15.5	0.33	111.4
PASQUALE DRIVE - NORTHEAST				55.00	7.0	0.33	4.7
PASQUALE DRIVE - SOUTHEAST				62.00	7.0	0.33	5.3
92+03	48.9' LT	96+20	40.3' LT	417.00	14.2	0.33	72.5
97+67	39.4' LT	98+59	40.3' LT	92.00	2.8	0.33	3.1
100+97	42.4' LT	101+82	38.8' LT	85.00	1.0	0.33	1.0
101+97	39.1' LT	106+04	46.7' LT	407.00	1.0	0.33	5.0
106+49	46.8' LT	106+62	47.0' LT	13.00	1.0	0.33	0.2
106+96	46.3' LT	107+68	47.4' LT	72.00	1.0	0.33	0.9
108+03	47.3' LT	108+12	46.8' LT	9.00	1.0	0.33	0.1
109+81	46.3' LT	110+57	46.8' LT	76.00	1.0	0.33	0.9
111+04	46.8' LT	111+73	46.4' LT	69.00	1.0	0.33	0.8
112+35	46.4' LT	112+59	46.9' LT	24.00	1.0	0.33	0.3
113+67	46.9' LT	115+67	46.7' LT	200.00	1.0	0.33	2.4
116+21	46.7' LT	118+13	47.1' LT	192.00	1.0	0.33	2.3
118+40	46.9' LT	120+88	46.5' LT	248.00	1.0	0.33	3.0
121+11	46.6' LT	123+50	37.8' LT	239.00	1.0	0.33	2.9
129+65	47.5' LT	129+85	46.6' LT	20.00	1.0	0.33	0.2
130+00	46.4' LT	130+20	46.5' LT	20.00	1.0	0.33	0.2
130+33	46.4' LT	130+77	46.6' LT	44.00	1.0	0.33	0.5
130+89	46.4' LT	131+54	46.5' LT	65.00	1.0	0.33	0.8
131+74	46.5' LT	132+38	39.6' LT	64.00	1.0	0.33	0.8
132+60	39.5' LT	133+22	39.4' LT	62.00	1.0	0.33	0.8
133+62	39.5' LT	134+54	39.4' LT	92.00	1.0	0.33	1.1
134+97	39.4' LT	135+43	39.4' LT	46.00	1.0	0.33	0.6
135+53	39.4' LT	136+03	39.6' LT	50.00	1.0	0.33	0.6
136+79	41.0' LT	138+42	47.2' LT	163.00	1.0	0.33	2.0
138+71	47.2' LT	140+00	47.2' LT	129.00	1.0	0.33	1.6
140+37	47.6' LT	140+92	47.1' LT	55.00	1.0	0.33	0.7
141+22	47.4' LT	141+63	47.2' LT	41.00	1.0	0.33	0.5
141+84	47.4' LT	142+12	47.1' LT	28.00	1.0	0.33	0.3
145+32	47.2' LT	145+58	47.0' LT	26.00	1.0	0.33	0.3
145+93	47.4' LT	146+88	47.5' LT	95.00	1.0	0.33	1.2
147+23	47.3' LT	147+45	47.3' LT	22.00	1.0	0.33	0.3
147+62	47.2' LT	149+03	47.2' LT	141.00	1.0	0.33	1.7
						(TABLE 1) SUBTOTAL:	547.4 CY

ITEM 610.1402 CONTINUES ON TABLE 2

TABLE 2

ITEM 610.1402 - TOPSOIL (ROADSIDE) (CY)							
FROM STATION	O/S	TO STATION	O/S	LENGTH (LF)	AVG WIDTH (LF)	DEPTH (LF)	VOLUME (CY)
TRANSIT ROAD - WEST SIDE							
67+24	65.3' RT	69+33	56.0' RT	209.00	8.2	0.33	20.8
69+69	51.6' RT	74+65	62.6' RT	496.00	7.1	0.33	42.7
75+01	55.7' RT	91+24	41.4' RT	1623.00	12.8	0.33	253.5
91+63	56.0' RT	96+20	57.3' RT	457.00	7.4	0.33	41.2
97+68	45.3' RT	98+87	54.0' RT	119.00	3.5	0.33	5.1
100+48	47.1' RT	105+72	46.7' RT	524.00	8.6	0.33	54.9
104+44	46.8' RT	106+39	46.3' RT	195.00	1.0	0.33	2.4
105+72	46.3' RT	106+82	46.1' RT	110.00	1.0	0.33	1.3
110+44	46.4' RT	111+33	39.7' RT	89.00	1.0	0.33	1.1
113+26	39.2' RT	113+90	40.9' RT	64.00	1.0	0.33	0.8
114+18	41.2' RT	121+41	45.7' RT	723.00	1.0	0.33	8.8
121+56	45.7' RT	127+05	43.3' RT	549.00	1.0	0.33	6.7
128+14	42.1' RT	128+84	42.3' RT	70.00	1.0	0.33	0.9
130+47	44.5' RT	130+61	44.5' RT	14.00	1.0	0.33	0.2
130+93	45.0' RT	132+41	47.0' RT	148.00	1.0	0.33	1.8
132+83	45.8' RT	133+82	45.8' RT	99.00	1.0	0.33	1.2
137+51	45.9' RT	138+02	45.6' RT	51.00	1.0	0.33	0.6
139+61	45.6' RT	140+85	38.8' RT	124.00	1.0	0.33	1.5
142+24	38.5' RT	142+65	38.8' RT	41.00	1.0	0.33	0.5
142+80	38.7' RT	143+47	38.8' RT	67.00	1.0	0.33	0.8
145+22	39.0' RT	145+32	38.7' RT	10.00	1.0	0.33	0.1
145+93	39.1' RT	146+22	38.6' RT	29.00	1.0	0.33	0.4
146+47	39.0' RT	146+77	38.9' RT	30.00	1.0	0.33	0.4
LEE STREET - SOUTHWEST				22.00	1.0	0.33	0.3
148+53	39.2' RT	148+74	39.2' RT	21.00	1.0	0.33	0.3
150+12	39.3' RT	150+57	39.3' RT	45.00	1.0	0.33	0.6
152+37	37.3' RT	154+34	40.6' RT	197.00	1.0	0.33	2.4
154+89	40.8' RT	156+93	39.1' RT	204.00	1.0	0.33	2.5
157+11	39.4' RT	157+64	39.1' RT	53.00	1.0	0.33	0.6
159+56	38.7' RT	160+10	44.1' RT	54.00	1.0	0.33	0.7
160+31	44.4' RT	161+26	43.9' RT	95.00	1.0	0.33	1.2
161+48	44.0' RT	162+66	43.6' RT	118.00	1.0	0.33	1.4
162+87	43.6' RT	163+77	43.2' RT	90.00	1.0	0.33	1.1
164+04	43.4' RT	164+86	42.8' RT	82.00	1.0	0.33	1.0
165+10	42.8' RT	166+19	41.2' RT	109.00	1.0	0.33	1.3
GENESEE STREET							
G 276+52	45.6' RT	G 281+85	50.3' RT	533.00	6.3	0.33	40.7
G 281+10	41.7' LT	G 284+57	55.0' LT	347.00	5.3	0.33	22.6
G 286+13	45.4' LT	G 288+91	45.1' LT	278.00	7.6	0.33	25.8
G 289+21	43.7' LT	G 289+96	40.7' LT	6.27	7.3	0.33	0.6
AROUND NEW SIDEWALK (CLOVERLEAF DRIVE)							
C 0+42	21.0' RT	C 1+66	21.2' RT	124.00	1.0	0.33	1.5
AROUND NEW SIDEWALK (PLEASANT VIEW DRIVE)							
PV 0+44	32.3' LT	PV 0+85	29.7' LT	41.00	1.0	0.33	0.5
PV 0+61	31.3' RT	PV 2+36	31.5' RT	175.00	1.0	0.33	2.1
AROUND NEW SIDEWALK (REHM ROAD - EAST)							
RE 0+54	16.4' LT	RE 1+02	12.0' LT	48.00	1.0	0.33	0.6
RE 0+56	14.5' RT	RE 0+67	12.6' RT	11.00	1.0	0.33	0.1
POND @ 86+00 RT							
SEE LAP-01 ADBE							13.0
						(TABLE 2) SUBTOTAL:	568.7 CY

ITEM 610.1402 CONTINUES ON TABLE 3

TABLE 3

ITEM 610.1402 - TOPSOIL (ROADSIDE) (CY)						
FROM STATION	O/S	TO STATION	O/S	AREA (SF)	DEPTH (LF)	VOLUME (CY)
TRANSIT ROAD - EAST SIDE						
102+01.0	36.5 LT	105+98.5	30.4 LT	2019.5	0.33	24.7
109+80.8	30.7 LT	110+06.7	30.6 LT	77.7	0.33	0.9
110+34.7	30.6 LT	110+57.1	30.6 LT	59.8	0.33	0.7
111+02.3	30.7 LT	111+75.4	30.7 LT	194.4	0.33	2.4
112+34.5	30.6 LT	112+83.0	41.1 LT	122.1	0.33	1.5
113+53.0	38.4 LT	115+60.6	33.1 LT	536.8	0.33	6.6
116+33.8	33.7 LT	118+09.0	33.6 LT	475.1	0.33	5.8
118+53.7	34.2 LT	120+81.7	32.9 LT	631.6	0.33	7.7
121+17.7	33.2 LT	123+50.9	30.2 LT	594.5	0.33	7.3
130+36.2	37.3 LT	130+72.8	31.9 LT	82.9	0.33	1.0
130+95.4	30.3 LT	131+53.5	30.5 LT	162.9	0.33	2.0
131+78.0	30.6 LT	132+32.4	30.8 LT	148.2	0.33	1.8
132+66.8	30.9 LT	133+19.2	31.1 LT	140.7	0.33	1.7
133+64.2	31.2 LT	134+49.5	31.5 LT	223.9	0.33	2.7
135+00.4	31.6 LT	135+35.8	31.9 LT	99.0	0.33	1.2
135+57.5	34.6 LT	136+16.4	43.7 LT	156.2	0.33	1.9
136+27.7	38.8 LT	138+38.8	32.02 LT	812.3	0.33	9.9
138+78.4	32.0 LT	140+01.4	31.9 LT	562.9	0.33	6.9
140+47.1	31.8 LT	140+90.9	31.8 LT	197.2	0.33	2.4
141+28.4	31.8 LT	141+61.1	31.8 LT	152.8	0.33	1.9
145+95.2	31.6 LT	146+80.8	31.5 LT	420.2	0.33	5.1
147+66.1	31.5 LT	149+00.3	35.9 LT	648.0	0.50	12.0
TRANSIT ROAD - WEST SIDE						
108+07.5	35.2 RT	110+32.7	34.4 RT	1483.2	0.33	18.1
114+18.4	30.4 RT	121+36.5	30.5 RT	2933.6	0.33	35.9
121+63.6	30.6 RT	126+05.7	30.8 RT	1792.2	0.33	21.9
126+10.7	30.8 RT	127+03.9	39.6 RT	440.2	0.33	5.4
128+16.6	35.2 RT	128+82.8	35.3 RT	295.8	0.33	3.6
130+96.3	35.2 RT	132+33.9	36.2 RT	624.3	0.33	7.6
132+91.8	35.6 RT	133+81.2	34.5 RT	410.0	0.33	5.0
137+51.8	33.2 RT	138+01.4	29.0 RT	206.9	0.33	2.5
139+60.5	29.0 RT	140+85.7	29.1 RT	526.5	0.33	6.4
142+23.6	29.2 RT	142+62.1	34.2 RT	196.7	0.33	2.4
142+86.2	32.9 RT	143+44.0	33.7 RT	221.3	0.33	2.7
148+51.4	33.2 RT	148+74.0	29.8 RT	105.9	0.33	1.3
150+11.7	29.8 RT	150+75.6	42.3 RT	325.5	0.33	4.0
152+36.6	29.7 RT	154+31.7	29.8 RT	987.0	0.33	12.1
154+92.6	34.0 RT	156+79.1	28.9 RT	784.3	0.33	9.6
157+28.8	28.8 RT	157+63.0	33.5 RT	239.4	0.33	2.9
159+56.4	27.7 RT	160+05.6	32.5 RT	238.6	0.33	2.9
					(TABLE 3) SUBTOTAL:	253.0 CY
					(TABLES 1-3) TOTAL:	1370.0 CY

ITEM 610.1402 CONTINUES ON TABLE 4

TABLE 4

ITEM 610.1402 - TOPSOIL (ROADSIDE) (CY)						
FROM STATION	O/S	TO STATION	O/S	AREA (SF)	DEPTH (LF)	VOLUME (CY)
TRANSIT ROAD - EAST SIDE - MIDBLOCK CROSSING REMOVALS						
151+24.0	35.4' LT	151+41.4	35.4' LT	136.5	0.5	2.5
TRANSIT ROAD - WEST SIDE - MIDBLOCK CROSSING REMOVALS						
160+79.1	34.4' RT	160+83.1	34.4' RT	57.9	0.5	1.1
166+90.9	31.5' RT	166+95.9	31.5' RT	68.9	0.5	1.3
					TOTAL:	5.0

ITEM 610.1402 - END

AFFIX SEAL:
ON:

ALTERED BY:
ON:

D264571

STATE OF NEW YORK · ROBERT F. SCHALLER · NO. 082465 · LICENSED PROFESSIONAL ENGINEER

AS-BUILT REVISIONS
DESCRIPTION OF ALTERATIONS:

NY 78, TRANSIT ROAD, S.H. 1334A-1
FRENCH ROAD TO WEHRLE DRIVE
TOWNS OF CHEEKTOWAGA & LANCASTER
VILLAGE OF DEPEW
COUNTY: ERIE REGION: 05

PIN 5813.61
NY 78
UTILITY QUALITY LEVEL D

BRIDGES

CULVERTS

ALL DIMENSIONS IN ft UNLESS OTHERWISE NOTED

MISCELLANEOUS TABLES - SHEET 5

CONTRACT NUMBER D264571

DRAWING NO. MST-5
SHEET NO. 81

IT IS A VIOLATION OF LAW FOR ANY PERSON, UNLESS THEY ARE ACTING UNDER THE DIRECTION OF A LICENSED PROFESSIONAL ENGINEER, ARCHITECT, LANDSCAPE ARCHITECT, OR LAND SURVEYOR, TO ALTER AN ITEM IN ANY WAY. IF AN ITEM BEARING THE STAMP OF A LICENSED PROFESSIONAL IS ALTERED, THE ALTERING ENGINEER, ARCHITECT, LANDSCAPE ARCHITECT, OR LAND SURVEYOR SHALL STAMP THE DOCUMENT AND INCLUDE THE NOTATION "ALTERED BY" FOLLOWED BY THEIR SIGNATURE, THE DATE OF SUCH ALTERATION, AND A SPECIFIC DESCRIPTION OF THE ALTERATION.

NEW YORK STATE OF OPPORTUNITY. Department of Transportation

DESIGN SUPERVISOR S. S. VAIDYA
JOB MANAGER R. F. SCHALLER
DESIGN C. L. CRITES
CHECK R. F. SCHALLER
DRAFTING C. L. CRITES
CHECK R. F. SCHALLER
PROJECT MANAGER S. S. VAIDYA

FILE NAME = 581361_CPH_HWY_MST-5.dgn
DATE/TIME = 22-JUN-2021 16:08
USER = ccrites

TABLE 1

ITEM 610.1602 - TURF ESTABLISHMENT (LAWNS) (SY)						
FROM STATION	O/S	TO STATION	O/S	LENGTH (LF)	AVG WIDTH (LF)	AREA (SY)
TRANSIT ROAD - EAST SIDE						
67+28	49.9' LT	85+20	43.9' LT	1792.00	14.4	2875.2
85+20	43.9' LT	91+08	49.1' LT	588.00	15.5	1012.7
PASQUALE DRIVE - NORTHEAST				55.00	7.0	42.8
PASQUALE DRIVE - SOUTHEAST				62.00	7.0	48.2
92+03	48.9' LT	96+20	40.3' LT	417.00	14.2	658.9
97+67	39.4' LT	98+59	40.3' LT	92.00	2.8	28.1
100+97	42.4' LT	101+82	38.8' LT	85.00	1.0	9.4
101+97	39.1' LT	106+04	46.7' LT	407.00	1.0	45.2
106+49	46.8' LT	106+62	47.0' LT	13.00	1.0	1.4
106+96	46.3' LT	107+68	47.4' LT	72.00	1.0	8.0
108+03	47.3' LT	108+12	46.8' LT	9.00	1.0	1.0
109+81	46.3' LT	110+57	46.8' LT	76.00	1.0	8.4
111+04	46.8' LT	111+73	46.4' LT	69.00	1.0	7.7
112+35	46.4' LT	112+59	46.9' LT	24.00	1.0	2.7
113+67	46.9' LT	115+67	46.7' LT	200.00	1.0	22.2
116+21	46.7' LT	118+13	47.1' LT	192.00	1.0	21.3
118+40	46.9' LT	120+88	46.5' LT	248.00	1.0	27.6
121+11	46.6' LT	123+50	37.8' LT	239.00	1.0	26.6
129+65	47.5' LT	129+85	46.6' LT	20.00	1.0	2.2
130+00	46.4' LT	130+20	46.5' LT	20.00	1.0	2.2
130+33	46.4' LT	130+77	46.6' LT	44.00	1.0	4.9
130+89	46.4' LT	131+54	46.5' LT	65.00	1.0	7.2
131+74	46.5' LT	132+38	39.6' LT	64.00	1.0	7.1
132+60	39.5' LT	133+22	39.4' LT	62.00	1.0	6.9
133+62	39.5' LT	134+54	39.4' LT	92.00	1.0	10.2
134+97	39.4' LT	135+43	39.4' LT	46.00	1.0	5.1
135+53	39.4' LT	136+03	39.6' LT	50.00	1.0	5.6
136+79	41.0' LT	138+42	47.2' LT	163.00	1.0	18.1
138+71	47.2' LT	140+00	47.2' LT	129.00	1.0	14.3
140+37	47.6' LT	140+92	47.1' LT	55.00	1.0	6.1
141+22	47.4' LT	141+63	47.2' LT	41.00	1.0	4.6
141+84	47.4' LT	142+12	47.1' LT	28.00	1.0	3.1
145+32	47.2' LT	145+58	47.0' LT	26.00	1.0	2.9
145+93	47.4' LT	146+88	47.5' LT	95.00	1.0	10.6
147+23	47.3' LT	147+45	47.3' LT	22.00	1.0	2.4
147+62	47.2' LT	149+03	47.2' LT	141.00	1.0	15.7
					(TABLE 1) SUBTOTAL:	4976.6 SY

ITEM 610.1602 CONTINUES ON TABLE 2

TABLE 2

ITEM 610.1602 - TURF ESTABLISHMENT (LAWNS) (SY)						
FROM STATION	O/S	TO STATION	O/S	LENGTH (LF)	AVG WIDTH (LF)	AREA (SY)
TRANSIT ROAD - WEST SIDE						
67+24	65.3' RT	69+33	56.0' RT	209.00	8.2	189.5
69+69	51.6' RT	74+65	62.6' RT	496.00	7.1	388.5
75+01	55.7' RT	91+24	41.4' RT	1623.00	12.8	2304.7
91+63	56.0' RT	96+20	57.3' RT	457.00	7.4	374.7
97+68	45.3' RT	98+87	54.0' RT	119.00	3.5	46.4
100+48	47.1' RT	105+72	46.7' RT	524.00	8.6	499.0
104+44	46.8' RT	106+39	46.3' RT	195.00	1.0	21.7
105+72	46.3' RT	106+82	46.1' RT	110.00	1.0	12.2
110+44	46.4' RT	111+33	39.7' RT	89.00	1.0	9.9
113+26	39.2' RT	113+90	40.9' RT	64.00	1.0	7.1
114+18	41.2' RT	121+41	45.7' RT	723.00	1.0	80.3
121+56	45.7' RT	127+05	43.3' RT	549.00	1.0	61.0
128+14	42.1' RT	128+84	42.3' RT	70.00	1.0	7.8
130+47	44.5' RT	130+61	44.5' RT	14.00	1.0	1.6
130+93	45.0' RT	132+41	47.0' RT	148.00	1.0	16.4
132+83	45.8' RT	133+82	45.8' RT	99.00	1.0	11.0
137+51	45.9' RT	138+02	45.6' RT	51.00	1.0	5.7
139+61	45.6' RT	140+85	38.8' RT	124.00	1.0	13.8
142+24	38.5' RT	142+65	38.8' RT	41.00	1.0	4.6
142+80	38.7' RT	143+47	38.8' RT	67.00	1.0	7.4
145+22	39.0' RT	145+32	38.7' RT	10.00	1.0	1.1
145+93	39.1' RT	146+22	38.6' RT	29.00	1.0	3.2
146+47	39.0' RT	146+77	38.9' RT	30.00	1.0	3.3
LEE STREET - SOUTHWEST				22.00	1.0	2.4
148+53	39.2' RT	148+74	39.2' RT	21.00	1.0	2.3
150+12	39.3' RT	150+57	39.3' RT	45.00	1.0	5.0
152+37	37.3' RT	154+34	40.6' RT	197.00	1.0	21.9
154+89	40.8' RT	156+93	39.1' RT	204.00	1.0	22.7
157+11	39.4' RT	157+64	39.1' RT	53.00	1.0	5.9
159+56	38.7' RT	160+10	44.1' RT	54.00	1.0	6.0
160+31	44.4' RT	161+26	43.9' RT	95.00	1.0	10.6
161+48	44.0' RT	162+66	43.6' RT	118.00	1.0	13.1
162+87	43.6' RT	163+77	43.2' RT	90.00	1.0	10.0
164+04	43.4' RT	164+86	42.8' RT	82.00	1.0	9.1
165+10	42.8' RT	166+19	41.2' RT	109.00	1.0	12.1
GENESEE STREET						
G 276+52	45.6' RT	G 281+85	50.3' RT	533.00	6.3	370.1
G 281+10	41.7' LT	G 284+57	55.0' LT	347.00	5.3	205.5
G 286+13	45.4' LT	G 288+91	45.1' LT	278.00	7.6	234.4
G 289+21	43.7' LT	G 289+96	40.7' LT	6.27	7.3	5.1
AROUND NEW SIDEWALK (CLOVERLEAF DRIVE)						
C 0+42	21.0' RT	C 1+66	21.2' RT	124.00	1.0	13.8
AROUND NEW SIDEWALK (PLEASANT VIEW DRIVE)						
PV 0+44	32.3' LT	PV 0+85	29.7' LT	41.00	1.0	4.6
PV 0+61	31.3' RT	PV 2+36	31.5' RT	175.00	1.0	19.4
AROUND NEW SIDEWALK (REHM ROAD - EAST)						
RE 0+54	16.4' LT	RE 1+02	12.0' LT	48.00	1.0	5.3
RE 0+56	14.5' RT	RE 0+67	12.6' RT	11.00	1.0	1.2
POND @ 86+00 RT						
SEE LAP-01 ADBE						118.0
					(TABLE 2) SUBTOTAL:	5169.5 SY

ITEM 610.1602 CONTINUES ON TABLE 3

TABLE 3

ITEM 610.1602 - TURF ESTABLISHMENT (LAWNS) (SY)					
FROM STATION	O/S	TO STATION	O/S	AREA (SF)	VOLUME (SY)
TRANSIT ROAD - EAST SIDE					
102+01.0	36.5 LT	105+98.5	30.4 LT	2019.5	224.4
109+80.8	30.7 LT	110+06.7	30.6 LT	77.7	8.6
110+34.7	30.6 LT	110+57.1	30.6 LT	59.8	6.6
111+02.3	30.7 LT	111+75.4	30.7 LT	194.4	21.6
112+34.5	30.6 LT	112+83.0	41.1 LT	122.1	13.6
113+53.0	38.4 LT	115+60.6	33.1 LT	536.8	59.6
116+33.8	33.7 LT	118+09.0	33.6 LT	475.1	52.8
118+53.7	34.2 LT	120+81.7	32.9 LT	631.6	70.2
121+17.7	33.2 LT	123+50.9	30.2 LT	594.5	66.1
130+36.2	37.3 LT	130+72.8	31.9 LT	82.9	9.2
130+95.4	30.3 LT	131+53.5	30.5 LT	162.9	18.1
131+78.0	30.6 LT	132+32.4	30.8 LT	148.2	16.5
132+66.8	30.9 LT	133+19.2	31.1 LT	140.7	15.6
133+64.2	31.2 LT	134+49.5	31.5 LT	223.9	24.9
135+00.4	31.6 LT	135+35.8	31.9 LT	99.0	11.0
135+57.5	34.6 LT	136+16.4	43.7 LT	156.2	17.4
136+27.7	38.8 LT	138+38.8	32.02 LT	812.3	90.3
138+78.4	32.0 LT	140+01.4	31.9 LT	562.9	62.5
140+47.1	31.8 LT	140+90.9	31.8 LT	197.2	21.9
141+28.4	31.8 LT	141+61.1	31.8 LT	152.8	17.0
145+95.2	31.6 LT	146+80.8	31.5 LT	420.2	46.7
147+66.1	31.5 LT	149+00.3	35.9 LT	648.0	72.0
TRANSIT ROAD - WEST SIDE					
108+07.5	35.2 RT	110+32.7	34.4 RT	1483.2	164.8
114+18.4	30.4 RT	121+36.5	30.5 RT	2933.6	326.0
121+63.6	30.6 RT	126+05.7	30.8 RT	1792.2	199.1
126+10.7	30.8 RT	127+03.9	39.6 RT	440.2	48.9
128+16.6	35.2 RT	128+82.8	35.3 RT	295.8	32.9
130+96.3	35.2 RT	132+33.9	36.2 RT	624.3	69.4
132+91.8	35.6 RT	133+81.2	34.5 RT	410.0	45.6
137+51.8	33.2 RT	138+01.4	29.0 RT	206.9	23.0
139+60.5	29.0 RT	140+85.7	29.1 RT	526.5	58.5
142+23.6	29.2 RT	142+62.1	34.2 RT	196.7	21.9
142+86.2	32.9 RT	143+44.0	33.7 RT	221.3	24.6
148+51.4	33.2 RT	148+74.0	29.8 RT	105.9	11.8
150+11.7	29.8 RT	150+75.6	42.3 RT	325.5	36.2
152+36.6	29.7 RT	154+31.7	29.8 RT	987.0	109.7
154+92.6	34.0 RT	156+79.1	28.9 RT	784.3	87.1
157+28.8	28.8 RT	157+63.0	33.5 RT	239.4	26.6
159+56.4	27.7 RT	160+05.6	32.5 RT	238.6	26.5
				(TABLE 3) SUBTOTAL:	2259.0 SY
				(TABLES 1-3) TOTAL:	12406.0 SY

ITEM 610.1602 CONTINUES ON TABLE 4

TABLE 4

ITEM 610.1602 - TURF ESTABLISHMENT (LAWNS) (SY)						
FROM STATION	O/S	TO STATION	O/S	AREA (SF)	DEPTH (LF)	AREA (SY)
TRANSIT ROAD - EAST SIDE - MIDBLOCK CROSSING REMOVALS						
151+24.0	35.4' LT	151+41.4	35.4' LT	136.5	N/A	15.2
TRANSIT ROAD - WEST SIDE - MIDBLOCK CROSSING REMOVALS						
160+79.1	34.4' RT	160+83.1	34.4' RT	57.9	N/A	6.4
166+90.9	31.5' RT	166+95.9	31.5' RT	68.9	N/A	7.7
					TOTAL:	30.0

ITEM 610.1602 - END

AFFIX SEAL:
ON:

ALTERED BY:
ON:

D264571

STATE OF NEW YORK · ROBERT F. SCHALLER · LICENSED PROFESSIONAL ENGINEER · NO. 082465

AS-BUILT REVISIONS
DESCRIPTION OF ALTERATIONS:

NY 78, TRANSIT ROAD, S.H. 1334A-1
FRENCH ROAD TO WEHRLE DRIVE
TOWNS OF CHEEKTOWAGA & LANCASTER
VILLAGE OF DEPEW
COUNTY: ERIE REGION: 05

PIN 5813.61
NY 78
UTILITY QUALITY LEVEL D

BRIDGES

CULVERTS

ALL DIMENSIONS IN ft UNLESS OTHERWISE NOTED

MISCELLANEOUS TABLES - SHEET 6

CONTRACT NUMBER
D264571

DRAWING NO. MST-6
SHEET NO. 82

IT IS A VIOLATION OF LAW FOR ANY PERSON, UNLESS THEY ARE ACTING UNDER THE DIRECTION OF A LICENSED PROFESSIONAL ENGINEER, ARCHITECT, LANDSCAPE ARCHITECT, OR LAND SURVEYOR, TO ALTER AN ITEM IN ANY WAY. IF AN ITEM BEARING THE STAMP OF A LICENSED PROFESSIONAL IS ALTERED, THE ALTERING ENGINEER, ARCHITECT, LANDSCAPE ARCHITECT, OR LAND SURVEYOR SHALL STAMP THE DOCUMENT AND INCLUDE THE NOTATION "ALTERED BY" FOLLOWED BY THEIR SIGNATURE, THE DATE OF SUCH ALTERATION, AND A SPECIFIC DESCRIPTION OF THE ALTERATION.

NEW YORK STATE OF OPPORTUNITY. Department of Transportation

DESIGN SUPERVISOR S. S. VAIDYA
JOB MANAGER R. F. SCHALLER
DESIGN C. L. CRITES
CHECK R. F. SCHALLER
DRAFTING C. L. CRITES
CHECK R. F. SCHALLER
PROJECT MANAGER S. S. VAIDYA

FILE NAME = 581361_CPH_HWY_MST-6.dgn
DATE/TIME = 22-JUN-2021 16:09
USER = ccrites

TABLE A

TABLE OF WZTC PAVEMENT MARKINGS

ROADWAY MARKINGS	LOCATION		LENGTH	"L" FACTOR	619.080101 (LF)	619.080102 (LF)	619.080201 (EA)	619.080202 (EA)	619.100101 (LF)	619.100201 (EA)	619.100301 (EA)	COMMENTS
REM EXIST & INST/REM PROP - WHITE EDGE LINE	68+82	74+73	608	1	608	608			608			SB TRANSIT
REM EXIST - WHITE HATCH LINE (24")	71+23	74+32	410	6		2,460						SB TRANSIT
REM EXIST & INST/REM PROP - WHITE EDGE LINE	74+92	91+26	1,738	1	1,738	1,738			1,738			SB TRANSIT
REM EXIST & INST/REM PROP - WHITE EDGE LINE	74+92	91+26	575	1	575	575			575			SB TRANSIT
REM EXIST & INST/REM PROP - W BROKEN LANE LINE	75+25	97+25	2,200	0.25	550	550			550			SB TRANSIT
REM EXIST & INST/REM PROP - WHITE LANE LINE	96+20	97+25	105	1		105						SB TRANSIT (X2)
REM EXIST & INST/REM PROP - WHITE EDGE LINE	94+65	96+20	155	1	404	155			404			SB TRANSIT
REM EXIST & INST/REM PROP - W BROKEN LANE LINE	94+65	98+91	426	0.25	107	107			107			SB TRANSIT
REM EXIST - WHITE BROKEN LANE LINE	95+20	96+20	100	0.25	25				25			NB TRANSIT
INST/REM PROP - WHITE EDGE LINE	95+20	98+82	362	1	362				362			NB TRANSIT
REM EXIST & INST/REM PROP - WHITE LANE LINE	96+20	98+95	275	1	275	275			275			SB TRANSIT
REM EXIST & INST/REM PROP - "ONLY" LETTERS	96+75						4	4			4	SB TRANSIT - RT TURN LANE
REM EXIST & INST/REM PROP - RT TURN ARROW	96+88						1	1		1		SB TRANSIT - RT TURN LANE
REM EXIST & INST/REM PROP - "ONLY" LETTERS	97+73						4	4			4	SB TRANSIT - RT TURN LANE
REM EXIST & INST/REM PROP - RT TURN ARROW	97+85						1	1		1		SB TRANSIT - RT TURN LANE
INST/REM PROP - WHITE LANE LINE	100+16	101+64	148	1	148				148			NB TRANSIT
INST/REM PROP - RT TURN ARROW	100+42						1			1		NB TRANSIT - RT TURN LANE
INST/REM PROP - "ONLY" LETTERS	100+52						4				4	NB TRANSIT - RT TURN LANE
INST/REM PROP - RT TURN ARROW	101+49						1			1		NB TRANSIT - RT TURN LANE
INST/REM PROP - "ONLY" LETTERS	101+59						4				4	NB TRANSIT - RT TURN LANE
INST/REM PROP - WHITE EDGE LINE	101+64	108+88	726	1	726				726			NB TRANSIT
REM EXIST - W BROKEN LANE LINE	101+64	108+88	726	0.25	180	180			180			NB TRANSIT
REM EXIST & INST/REM PROP - WHITE EDGE LINE	94+65	G 280+10	955	1	955	155			955			SB TRANSIT - WB GENESEE
REM EXIST & INST/REM PROP - W BROKEN LANE LINE	94+65	98+91	426	0.25	107	107			107			SB TRANSIT
REM EXIST & INST/REM PROP - Y PARTIAL BARRIER	94+65	95+13	48	1.25	120	120			120			SB TRANSIT (X2)
INST/REM PROP - WHITE DOTTED EXT. LINE	94+65	96+20	155	0.33	52				52			SB TRANSIT
INST/REM PROP - WHITE DOTTED EXT. LINE	95+13	96+20	107	0.33	36				36			SB TRANSIT
REM EXIST & INST/REM PROP - Y FULL BARRIER LINE	95+13	98+84	371	2	742	742			742			NB / SB TRANSIT
REM EXIST & INST/REM PROP - WHITE LANE LINE	96+20	98+95	275	1	550	550			550			SB TRANSIT (x2)
INST/REM PROP - "ONLY" LETTERS	96+75						4				4	SB TRANSIT - RT TURN LANE
INST/REM PROP - RT TURN ARROW	96+88						1			1		SB TRANSIT - RT TURN LANE
INST/REM PROP - "ONLY" LETTERS	97+73						4				4	SB TRANSIT - RT TURN LANE
INST/REM PROP - RT TURN ARROW	97+85						1			1		SB TRANSIT - RT TURN LANE
REM EXIST & INST/REM PROP - "ONLY" LETTERS	98+61						4	4			4	SB TRANSIT - RT TURN LANE
REM EXIST & INST/REM PROP - RT TURN ARROW	98+71						1	1		1		SB TRANSIT - RT TURN LANE
INST/REM PROP - WHITE DOTTED EXT. LINE	TRANSIT & GENESEE INT		290	0.33	97				97			SB TRANSIT & WB GENESEE
INST/REM PROP - YELLOW DOTTED EXT. LINE	TRANSIT & GENESEE INT		224	0.33	75				75			EB 33 - NB 78 / NB 78 - WB 33
REM EXIST & INST/REM PROP - W BROKEN LANE LINE	G 280+44	G 284+52	408	0	100	100			100			WB GENESEE
REM EXIST & INST/REM PROP - Y FULL BARRIER LINE	G 281+01	G 284+52	351	2	702	702			702			WB GENESEE
INST/REM PROP - WHITE DOTTED EXT. LINE	TRANSIT & GENESEE INT		292	0.33	97				97			SB TRANSIT & EB GENESEE
INST/REM PROP - WHITE EDGE LINE	G 282+82	106+76	734	1	734				734			EB GENESEE - SB TRANSIT
REM EXIST & INST/REM PROP - W BROKEN LANE LINE	G 282+82	G 284+46	164	0.25	40	40			40			EB GENESEE
REM EXIST & INST/REM PROP - WHITE LANE LINE	G 282+82	G 284+50	168	1	168	168			168			EB GENESEE
REM EXIST & INST/REM PROP - "ONLY" LETTERS	G 284+03						4	4			4	EB GENESEE - RT TURN LANE
REM EXIST & INST/REM PROP - RT TURN ARROW	G 284+15						1	1		1		EB GENESEE - RT TURN LANE
REM EXIST & INST/REM PROP - W STOP BAR (18")	TRANSIT & GENESEE INT		VARIES	4.50	378	405			378			NB TRANSIT & EB GENESEE
REM EXIST & INST/REM PROP - Y FULL BARRIER LINE	100+22	104+45	423	2	846	846			846			NB / SB TRANSIT
REM EXIST & INST/REM PROP - W BROKEN LANE LINE	100+22	106+76	654	0.25	160	160			160			SB TRANSIT
REM EXIST & INST/REM PROP - Y PARTIAL BARRIER	104+45	106+76	231	1.25	289	289			289			SB TRANSIT
INST/REM PROP - WHITE DOTTED EXT. LINE	TRANSIT & GENESEE INT		290	0.33	97				97			NB TRANSIT & WB GENESEE
REM EXIST & INST/REM PROP - W STOP BAR (18")	TRANSIT & GENESEE INT		VARIES	4.50	369	410			369			SB TRANSIT & WB GENESEE
INST/REM PROP - WHITE EDGE LINE	96+68	G 291+42	800	1	800				800			WB GENESEE - NB TRANSIT
REM EXIST & INST/REM PROP - Y FULL BARRIER LINE	96+68	98+85	217	2	434	434			434			NB / SB TRANSIT
REM EXIST & INST/REM PROP - W BROKEN LANE LINE	96+68	98+85	217	0.25	160	160			160			NB TRANSIT
REM EXIST & INST/REM PROP - LT TURN ARROW	97+85						1	1		1		SB TRANSIT - LT TURN LANE
REM EXIST & INST/REM PROP - LT TURN ARROW	98+61						1	1		1		SB TRANSIT - LT TURN LANE
REM EXIST & INST/REM PROP - W BROKEN LANE LINE	G 286+06	G 289+96	390	0.25	90	90			90			WB GENESEE
REM EXIST & INST/REM PROP - WHITE LANE LINE	G 286+06	G 288+55	249	1	249	249			249			WB GENESEE
INST/REM PROP - WHITE DOTTED EXT. LINE	TRANSIT & GENESEE INT		694	0.33	231				231			SEE DWG. WZ3E-1
INST/REM PROP - WHITE EDGE LINE	G 286+96	103+09	478	1	478				478			NB TRANSIT - EB GENESEE
REM EXIST & INST/REM PROP - W BROKEN LANE LINE	G 286+06	G 286+96	90	0.25	60	60			60			EB & WB GENESEE (x2)
REM EXIST & INST/REM PROP - WHITE LANE LINE	G 286+06	G 286+96	90	1	90	90			90			WB GENESEE
REM EXIST & INST/REM PROP - Y FULL BARRIER LINE	G 286+06	G 286+96	90	2	180	180			180			EB / WB GENESEE
REM EXIST & INST/REM PROP - LT TURN ARROW	G 286+29						1	1		1		WB GENESEE - LT TURN LANE
REM EXIST & INST/REM PROP - W STOP BAR (18")	TRANSIT & GENESEE INT		VARIES	4.50	329	347			329			NB TRANSIT & WB GENESEE
REM EXIST & INST/REM PROP - W BROKEN LANE LINE	100+16	103+09	293	0.25	80	80			80			NB TRANSIT
REM EXIST & INST/REM PROP - Y FULL BARRIER LINE	100+16	103+09	293	2	586	586			586			NB / SB TRANSIT
REM EXIST & INST/REM PROP - WHITE LANE LINE	100+16	103+09	293	1	293	293			293			NB TRANSIT
REM EXIST & INST/REM PROP - LT TURN ARROW	100+48						1	1		1		NB TRANSIT - LT TURN LANE
REM EXIST & INST/REM PROP - LT TURN ARROW	102+06						1	1		1		NB TRANSIT - LT TURN LANE

WZTC PAVEMENT MARKINGS CONTINUES ON DWG. MST-8, TABLE B

AFFIX SEAL:
ON:

ALTERED BY:
ON:

D264571
STATE OF NEW YORK
ROBERT F. SCHALLER
NO. 082465
LICENSED PROFESSIONAL ENGINEER

AS-BUILT REVISIONS
DESCRIPTION OF ALTERATIONS:

NY 78, TRANSIT ROAD, S.H. 1334A-1
FRENCH ROAD TO WEHRLE DRIVE
TOWNS OF CHEEKTOWAGA & LANCASTER
VILLAGE OF DEPEW
COUNTY: ERIE REGION: 05

PIN 5813.61
NY 78
UTILITY QUALITY LEVEL D

BRIDGES

CULVERTS

ALL DIMENSIONS IN ft UNLESS OTHERWISE NOTED

MISCELLANEOUS TABLES - SHEET 7

CONTRACT NUMBER
D264571

DRAWING NO. MST-7
SHEET NO. 83

IT IS A VIOLATION OF LAW FOR ANY PERSON, UNLESS THEY ARE ACTING UNDER THE DIRECTION OF A LICENSED PROFESSIONAL ENGINEER, ARCHITECT, LANDSCAPE ARCHITECT, OR LAND SURVEYOR, TO ALTER AN ITEM IN ANY WAY. IF AN ITEM BEARING THE STAMP OF A LICENSED PROFESSIONAL IS ALTERED, THE ALTERING ENGINEER, ARCHITECT, LANDSCAPE ARCHITECT, OR LAND SURVEYOR SHALL STAMP THE DOCUMENT AND INCLUDE THE NOTATION "ALTERED BY" FOLLOWED BY THEIR SIGNATURE, THE DATE OF SUCH ALTERATION, AND A SPECIFIC DESCRIPTION OF THE ALTERATION.

NEW YORK STATE OF OPPORTUNITY. Department of Transportation

DESIGN SUPERVISOR S. S. VAIDYA JOB MANAGER R. F. SCHALLER DESIGN C. L. CRITES CHECK R. F. SCHALLER DRAFTING C. L. CRITES CHECK R. F. SCHALLER PROJECT MANAGER S. S. VAIDYA

FILE NAME = 581361_CPH.HWY.MST-7.dgn
DATE/TIME = 22-JUN-2021 12:38
USER = corites

TABLE B

TABLE OF WZTC PAVEMENT MARKINGS

	ROADWAY MARKINGS	LOCATION		LENGTH	"L" FACTOR	619.080101 (LF)	619.080102 (LF)	619.080201 (EA)	619.080202 (EA)	619.100101 (LF)	619.100201 (EA)	619.100301 (EA)	COMMENTS
PHASE 4	INST/REM PROP - WHITE DOTTED EXT. LINE	G 275+07	G 276+52	145	0.33	48				48			EB GENESEE
	REM EXIST & INST/REM PROP - W BROKEN LANE LINE	G 275+07	G 280+94	587	0.25	140	140			140			EB GENESEE
	REM EXIST & INST/REM PROP - Y PARTIAL BARRIER	G 275+07	G 280+94	587	1	734	734			734			EB GENESEE
	INST/REM PROP - WHITE EDGE LINE	G 275+52	G 282+13	568	1	568				568			WB GENESEE - NB TRANSIT
PHASE 6A	INST/REM PROP - WHITE DOTTED EXT. LINE	TRANSIT & FRENCH INT		337	0.33	112				112			SB TRANSIT & EB / WB FRENCH
	REM EXIST & INST/REM PROP - W STOP BAR (18")	TRANSIT & FRENCH INT		VARIES	4.50	230	248			230			NB TRANSIT & WB GENESEE
	INST/REM PROP - WHITE EDGE LINE	167+66	FW 2+67	457	1	457				457			SB TRANSIT - WB FRENCH
	REM EXIST & INST/REM PROP - W BROKEN LANE LINE	167+66	169+54	188	0.25	40	40			40			SB TRANSIT
	REM EXIST & INST/REM PROP - WHITE LANE LINE	168+57	169+54	97	1	97	97			97			SB TRANSIT
	REM EXIST & INST/REM PROP - Y FULL BARRIER LINE	FW 0+44	FW 2+67	223	2	446	446			446			EB / WB FRENCH
	REM EXIST & INST/REM PROP - WHITE LANE LINE	FW 0+44	FW 1+01	57	1	57	57			57			EB FRENCH
PHASE 6B	INST/REM PROP - WHITE DOTTED EXT. LINE	TRANSIT & FRENCH INT		347	0.33	116				116			NB TRANSIT & EB / WB FRENCH
	REM EXIST & INST/REM PROP - W STOP BAR (18")	TRANSIT & FRENCH INT		VARIES	4.50	266	284			266			NB TRANSIT & WB GENESEE
	INST/REM PROP - WHITE EDGE LINE	FE 2+18	171+96	349	1	349				349			NB TRANSIT - EB FRENCH
	REM EXIST & INST/REM PROP - W BROKEN LANE LINE	170+46	171+96	150	0.25	50	50			5			NB TRANSIT
	REM EXIST & INST/REM PROP - WHITE LANE LINE	170+46	171+35	89	1	89	89			89			NB TRANSIT
	REM EXIST & INST/REM PROP - Y FULL BARRIER LINE	FE 0+57	FE 1+68	111	2	222	222			222			EB / WB FRENCH
	REM EXIST & INST/REM PROP - WHITE LANE LINE	FE 0+57	FE 1+11	54	1	54	54			54			WB FRENCH
					(TABLE A) SUBTOTAL:	16,470	14,115	45	25	16,470	13	32	
					(TABLE B) SUBTOTAL:	4,076	2,461	0	0	4,031	0	0	
					(TABLES A - B) TOTAL:	20,546	16,576	45	25	20,501	13	32	

WZTC PAVEMENT MARKINGS - END
(SEE TABLE A ON DWG. MST-7)

TABLE 2

627.50140008 - CUTTING PAVEMENT (LF)

CL STA	OFFSET	COMMENTS	LENGTH (LF)
TRANSIT ROAD - PHASE 1 WIDENING			
69+69.0	RT	TRANSVERSE	8.0
		LONGITUDINAL (EDGE OF PAVT)	491.0
74+60.0	RT	TRANSVERSE (NW of Aroo Dr.)	65.0
75+00.0	RT	TRANSVERSE	41.0
		LONGITUDINAL (EDGE OF PAVT)	300.0
78+00.0	RT	TRANSVERSE	10.4
		LONGITUDINAL (EDGE OF SHLDR)	700.0
85+00.0	RT	TRANSVERSE	10.7
87+28.0	RT	TRANSVERSE	10.5
		LONGITUDINAL (EDGE OF SHLDR)	402.0
91+30.0	RT	TRANSVERSE	48.0
91+73.0	RT	TRANSVERSE	19.3
		LONGITUDINAL (EDGE OF SHLDR)	447.0
96+20.0	RT	TRANSVERSE	6.7
TRANSIT AND GENESEE - PHASE 3A & 3B WIDENING			
97+68.0	RT	TRANSVERSE	2.0
		LONGITUDINAL (EXISTING CURB LINE / BETWEEN DS REMS)	552.0
G 281+10.0	LT	TRANSVERSE	2.0
TRANSIT ROAD - PHASE 3C WIDENING			
100+33.0	RT	TRANSVERSE	2.0
		LONGITUDINAL (EXISTING CURB LINE)	576.3
105+72.0	RT	TRANSVERSE	2.0
TRANSIT AND GENESEE - PHASE 3D WIDENING			
98+50.0	LT	TRANSVERSE	2.0
		LONGITUDINAL (EXISTING CURB LINE / BETWEEN DS REMS)	473.0
G 289+95.0	LT	TRANSVERSE	2.0
TRANSIT AND GENESEE - PHASE 3E WIDENING			
99+65.0	LT	TRANSVERSE	2.0
		LONGITUDINAL (EXISTING CURB LINE)	233.6
101+74.0	LT	TRANSVERSE	2.0
GENESEE STREET - PHASE 4 WIDENING			
276+52.0	RT	TRANSVERSE	2.0
		LONGITUDINAL (EXISTING CURB LINE)	533.0
281+85.0	RT	TRANSVERSE	2.0
FRENCH AND TRANSIT - PHASE 6A WIDENING			
FW 0+22	RT	TRANSVERSE	2.0
		LONGITUDINAL (EXISTING CURB LINE)	171.0
FW 1+67	RT	TRANSVERSE	2.0
FRENCH AND TRANSIT - PHASE 6B WIDENING			
FE 0+35	RT	TRANSVERSE	2.0
		LONGITUDINAL (EXISTING CURB LINE)	185.0
FE 1+84	RT	TRANSVERSE	2.0
SIDEWALK THROUGH DRIVEWAYS/LOTS (CUT ON BOTH SIDES)			
		SAWCUTS INCLUDED IN ITEMS 608.0101 & 608.020102	0.0
EXISTING SIDEWALK CUTS (FOR TIE-INS)			
		SAWCUTS INCLUDED IN ITEMS 608.0101 & 608.020102	0.0
		TOTAL (LF):	**5312.0**

ITEM 627.50140008 - END

TABLE 1

627.50140008 - CUTTING PAVEMENT (LF)

CL STA	OFFSET	COMMENTS	LENGTH (LF)
TRANSIT ROAD - EAST SIDE - MIDBLOCK CROSSING REMOVALS			
148+35.2	LT	TRANSVERSE	2.75
		LONGITUDINAL (CURB REMOVAL)	19.8
148+55.0	LT	TRANSVERSE	2.75
151+24.0	LT	TRANSVERSE	2.75
		LONGITUDINAL (CURB REMOVAL+17.4' SWK CUT)	34.8
151+41.4	LT	TRANSVERSE	2.75
TRANSIT ROAD - WEST SIDE - MIDBLOCK CROSSING REMOVALS			
160+73.1	RT	TRANSVERSE	2.75
		LONGITUDINAL (CURB REMOVAL+4.0' SWK CUT)	20.0
160+89.1	RT	TRANSVERSE	2.75
166+84.9	RT	TRANSVERSE	2.75
		LONGITUDINAL (CURB REMOVAL+5.0' SWK CUT)	22.0
167+01.9	RT	TRANSVERSE	2.75
		TOTAL (LF):	**119.0**

ITEM 619.04 - TYPE III CONSTRUCTION BARRICADE (EACH)

LOCATION	PHASE	STATION	OFF SET	QTY (EA)
THRUWAY PARKING LOT	1	69+72	71.9 RT	3
BEFORE THE BRIDGE, SOUTH BOUND	2	96+19	46.5 RT	1
BEFORE THE BRIDGE, NORTH BOUND	2	97+69	25.3 LT	2
NE OF TRANSIT AND GENESEE	2	98+78	28.6 LT	2
			TOTAL:	**8**

AFFIX SEAL:
ON:

D264571
STATE OF NEW YORK
ROBERT F. SCHALLER
NO. 082465
LICENSED PROFESSIONAL ENGINEER

ALTERED BY:
ON:

AS-BUILT REVISIONS
DESCRIPTION OF ALTERATIONS:

NY 78, TRANSIT ROAD, S.H. 1334A-1
FRENCH ROAD TO WEHRLE DRIVE
TOWNS OF CHEEKTOWAGA & LANCASTER
VILLAGE OF DEPEW
COUNTY: ERIE REGION: 05

PIN 5813.61
NY 78
UTILITY QUALITY LEVEL D

BRIDGES

CULVERTS

ALL DIMENSIONS IN ft UNLESS OTHERWISE NOTED

MISCELLANEOUS TABLES - SHEET 8

CONTRACT NUMBER
D264571

DRAWING NO. MST-8
SHEET NO. 84

IT IS A VIOLATION OF LAW FOR ANY PERSON, UNLESS THEY ARE ACTING UNDER THE DIRECTION OF A LICENSED PROFESSIONAL ENGINEER, ARCHITECT, LANDSCAPE ARCHITECT, OR LAND SURVEYOR, TO ALTER AN ITEM IN ANY WAY. IF AN ITEM BEARING THE STAMP OF A LICENSED PROFESSIONAL IS ALTERED, THE ALTERING ENGINEER, ARCHITECT, LANDSCAPE ARCHITECT, OR LAND SURVEYOR SHALL STAMP THE DOCUMENT AND INCLUDE THE NOTATION "ALTERED BY" FOLLOWED BY THEIR SIGNATURE, THE DATE OF SUCH ALTERATION, AND A SPECIFIC DESCRIPTION OF THE ALTERATION.

NEW YORK STATE OF OPPORTUNITY. Department of Transportation

DESIGN SUPERVISOR S. S. VAIDYA
JOB MANAGER R. F. SCHALLER
CHECK R. F. SCHALLER
DESIGN C. L. CRITES
CHECK R. F. SCHALLER
DRAFTING C. L. CRITES
CHECK R. F. SCHALLER
PROJECT MANAGER S. S. VAIDYA
FILE NAME = 581361_CPH_HWY_MST-8.dgn
DATE/TIME = 22-JUN-2021 12:38
USER = ccrites

TABLE 1

TABLE OF TEMPORARY AND PERMANENT PAVEMENT MARKINGS

ROADWAY MARKINGS	LOCATION		LENGTH	"L" FACTOR	619.0901 (LF)	685.11 (LF)	685.11120009 (LF)	685.12 (LF)	685.13 (EA)	685.14 (EA)	640.10 (LF)	640.11 (LF)	REMARKS
YELLOW - FULL BARRIER	55+10	57+78	268	2	(4") 536			(4") 536				536	
YELLOW - FULL BARRIER	55+14	56+28	114	2	(4") 228			(4") 228				228	
YELLOW - FULL BARRIER	63+58	65+88	230	2	(4") 460			(4") 460				460	
YELLOW - FULL BARRIER	75+03	77+37	234	2	(4") 468			(4") 468				468	
YELLOW - FULL BARRIER (LT)	82+18	89+78	760	2	(4") 1,520			(4") 1,520				1,520	
YELLOW - FULL BARRIER (RT)	82+18	89+78	760	2	(4") 1,520			(4") 1,520				1,520	
YELLOW - FULL BARRIER	95+14	98+83	369	2	(4") 738			(4") 738				738	
YELLOW - FULL BARRIER	100+33	104+46	413	2	(4") 826			(4") 826				826	
YELLOW - FULL BARRIER (LT)	110+34	112+62	228	2	(4") 456			(4") 456				456	
YELLOW - FULL BARRIER (RT)	113+67	115+35	168	2	(4") 336			(4") 336				336	
YELLOW - FULL BARRIER	125+19	127+05	186	2	(4") 372			(4") 372				372	
YELLOW - FULL BARRIER	128+15	129+97	182	2	(4") 364			(4") 364				364	
YELLOW - FULL BARRIER	167+80	169+54	174	2	(4") 348			(4") 348				348	
YELLOW - FULL BARRIER	170+44	172+48	204	2	(4") 408			(4") 408				408	
YELLOW - FULL BARRIER	171+54	172+48	94	2	(4") 188			(4") 188				188	
YELLOW - FULL BARRIER	FE 8+77	FE 9+33	56	2	(4") 112			(4") 112				112	
YELLOW - FULL BARRIER	FE 10+81	FE 11+38	57	2	(4") 114			(4") 114				114	
YELLOW - FULL BARRIER	M 0+59	M 0+89	30	2	(4") 60			(4") 60				60	
YELLOW - FULL BARRIER	Salvatore's Garden Place Hotel		91	2	(4") 182			(4") 182				182	
YELLOW - FULL BARRIER	A 0+68	A 1+24	56	2	(4") 112			(4") 112				112	
YELLOW - FULL BARRIER	G 281+11	G 284+50	339	2	(4") 678			(4") 678				678	
YELLOW - FULL BARRIER	G 286+04	G 290+90	486	2	(4") 972			(4") 972				972	
YELLOW - FULL BARRIER	G 289+20	G 292+46	326	2	(4") 652			(4") 652				652	
YELLOW - FULL BARRIER	PV 0+56	PV 1+19	63	2	(4") 126			(4") 126				126	
YELLOW - FULL BARRIER	MC DONALD ENTERANCE		21	2	(4") 42			(4") 42				42	
YELLOW - FULL BARRIER	FW 0+47	FW 1+53	106	2	(4") 212			(4") 212				212	
YELLOW - FULL BARRIER	FW 1+50	FW 1+67	17	2	(4") 34			(4") 34				34	
YELLOW - FULL BARRIER	FE 0+66	FE 1+84	118	2	(4") 236			(4") 236				236	
YELLOW - FULL BARRIER	FE 1+55	FE 1+84	29	2	(4") 58			(4") 58				58	
YELLOW - FULL BARRIER (CURBED MEDIAN) (LT)	33+34	46+26	1,292	3.5	(4") 4,522			(4") 4,522				4,522	
YELLOW - FULL BARRIER (CURBED MEDIAN) (RT)	33+34	46+26	1,292	3.5	(4") 4,522			(4") 4,522				4,522	
YELLOW - FULL BARRIER (CURBED MEDIAN) (LT)	47+88	55+13	725	3.5	(4") 2,536			(4") 2,536				2,536	
YELLOW - FULL BARRIER (CURBED MEDIAN) (RT)	47+88	55+13	725	3.5	(4") 2,536			(4") 2,536				2,536	
YELLOW - FULL BARRIER (CURBED MEDIAN) (LT)	67+41	70+14	273	3.5	(4") 956			(4") 956				956	
YELLOW - FULL BARRIER (CURBED MEDIAN) (RT)	67+41	70+14	273	3.5	(4") 956			(4") 956				956	
YELLOW - PARTIAL BARRIER (TWTL X2)	58+57	63+59	1,004	1.25	(4") 1,255			(4") 1,255				1,255	TWTL
YELLOW - PARTIAL BARRIER (TWTL X2)	77+37	82+18	962	1.25	(4") 1,203			(4") 1,203				1,203	TWTL
YELLOW - PARTIAL BARRIER (TWTL X2)	89+78	91+21	286	1.25	(4") 358			(4") 358				358	TWTL
YELLOW - PARTIAL BARRIER (TWTL X2)	91+79	95+12	666	1.25	(4") 833			(4") 833				833	TWTL
YELLOW - PARTIAL BARRIER (TWTL X2)	104+45	110+34	1,178	1.25	(4") 1,473			(4") 1,473				1,473	TWTL
YELLOW - PARTIAL BARRIER (TWTL) (LT)	115+34	125+19	985	1.25	(4") 1,231			(4") 1,231				1,231	TWTL
YELLOW - PARTIAL BARRIER (TWTL) (RT)	115+35	125+08	973	1.25	(4") 1,216			(4") 1,216				1,216	TWTL
YELLOW - PARTIAL BARRIER (TWTL X2)	129+97	136+17	1,240	1.25	(4") 1,550			(4") 1,550				1,550	TWTL
YELLOW - PARTIAL BARRIER (TWTL X2)	136+54	143+70	1,432	1.25	(4") 1,790			(4") 1,790				1,790	TWTL
YELLOW - PARTIAL BARRIER (TWTL X2)	144+04	148+05	802	1.25	(4") 1,003			(4") 1,003				1,003	TWTL
YELLOW - PARTIAL BARRIER (TWTL X2)	148+37	150+73	472	1.25	(4") 590			(4") 590				590	TWTL
YELLOW - PARTIAL BARRIER (TWTL X2)	151+26	160+81	1,910	1.25	(4") 2,388			(4") 2,388				2,388	TWTL
YELLOW - PARTIAL BARRIER (TWTL X2)	161+28	166+35	1,014	1.25	(4") 1,268			(4") 1,268				1,268	TWTL
YELLOW - PARTIAL BARRIER (TWTL X2)	167+10	167+80	140	1.25	(4") 175			(4") 175				175	TWTL
YELLOW - PARTIAL BARRIER (TWTL X2)	G 276+52	G 281+11	918	1.25	(4") 1,148			(4") 1,148				1,148	TWTL
WHITE - BROKEN LANE LINE (RT X2)	33+37	44+90	2,306	0.25	(4") 577	(4") 577					577		SB
WHITE - BROKEN LANE LINE (LT X2)	34+66	46+19	2,306	0.25	(4") 577	(4") 577					577		NB
WHITE - BROKEN LANE LINE (RT X2)	47+86	57+59	1,946	0.25	(4") 487	(4") 487					487		SB
WHITE - BROKEN LANE LINE (RT X2)	58+47	64+44	1,194	0.25	(4") 299	(4") 299					299		SB
WHITE - BROKEN LANE LINE (LT X2)	49+23	53+49	852	0.25	(4") 213	(4") 213					213		NB
WHITE - BROKEN LANE LINE (LT)	53+49	57+83	434	0.25	(4") 109	(4") 109					109		NB
WHITE - BROKEN LANE LINE (LT)	58+48	65+92	744	0.25	(4") 186	(4") 186					186		NB
WHITE - BROKEN LANE LINE (RT X2)	67+42	72+68	1,052	0.25	(4") 263	(4") 263					263		SB
WHITE - BROKEN LANE LINE (LT)	68+86	74+04	518	0.25	(4") 130	(4") 130					130		NB
WHITE - BROKEN LANE LINE (RT)	75+03	97+91	2,288	0.25	(4") 572	(4") 572					572		SB
WHITE - BROKEN LANE LINE (RT)	75+03	91+64	1,661	0.25	(4") 415	(4") 415					415		SB
WHITE - BROKEN LANE LINE (LT)	76+03	98+79	2,276	0.25	(4") 569	(4") 569					569		NB
WHITE - BROKEN LANE LINE (RT)	100+38	111+61	1,123	0.25	(4") 281	(4") 281					281		SB
WHITE - BROKEN LANE LINE (LT)	101+18	112+62	1,144	0.25	(4") 286	(4") 286					286		NB
WHITE - BROKEN LANE LINE (RT)	113+68	125+98	1,230	0.25	(4") 308	(4") 308					308		SB
WHITE - BROKEN LANE LINE (LT)	114+66	127+05	1,239	0.25	(4") 310	(4") 310					310		NB
WHITE - BROKEN LANE LINE (RT)	128+15	136+08	793	0.25	(4") 198	(4") 198					198		SB
WHITE - BROKEN LANE LINE (LT)	129+18	136+08	690	0.25	(4") 173	(4") 173					173		NB
WHITE - BROKEN LANE LINE (RT,LT X2)	136+50	148+00	2,300	0.25	(4") 575	(4") 575					575		SB, NB
WHITE - BROKEN LANE LINE (RT,LT X2)	148+36	160+76	2,480	0.25	(4") 620	(4") 620					620		SB, NB
WHITE - BROKEN LANE LINE (RT,LT X2)	161+32	166+28	992	0.25	(4") 248	(4") 248					248		SB, NB
WHITE - BROKEN LANE LINE (RT)	167+91	168+54	63	0.25	(4") 16	(4") 16					16		SB
WHITE - BROKEN LANE LINE (LT)	167+91	169+53	162	0.25	(4") 41	(4") 41					41		NB
WHITE - BROKEN LANE LINE (RT)	170+46	172+18	172	0.25	(4") 43	(4") 43					43		SB
WHITE - BROKEN LANE LINE (LT)	171+45	172+37	92	0.25	(4") 23	(4") 23					23		NB
WHITE - BROKEN LANE LINE (RT)	G 276+52	G 283+42	690	0.25	(4") 173	(4") 173					173		EB
WHITE - BROKEN LANE LINE (LT)	G 276+52	G 284+59	807	0.25	(4") 202	(4") 202					202		WB
WHITE - BROKEN LANE LINE (RT)	G 285+98	G 289+26	328	0.25	(4") 82	(4") 82					82		EB
WHITE - BROKEN LANE LINE (LT)	G 287+17	G 290+78	361	0.25	(4") 90	(4") 90					90		WB

TEMPORARY & FINAL PAVEMENT MARKINGS CONTINUE ON DWG. MST-10, TABLE 2

AFFIX SEAL:
ON:

ALTERED BY:
ON:

D264571
STATE OF NEW YORK
ROBERT F. SCHALLER
NO. 082465
LICENSED PROFESSIONAL ENGINEER

AS-BUILT REVISIONS
DESCRIPTION OF ALTERATIONS:

NY 78, TRANSIT ROAD, S.H. 1334A-1
FRENCH ROAD TO WEHRLE DRIVE
TOWNS OF CHEEKTOWAGA & LANCASTER
VILLAGE OF DEPEW
COUNTY: ERIE REGION: 05

PIN 5813.61
NY 78
UTILITY QUALITY LEVEL D

BRIDGES

CULVERTS

ALL DIMENSIONS IN ft UNLESS OTHERWISE NOTED

MISCELLANEOUS TABLES - SHEET 9

CONTRACT NUMBER
D264571

DRAWING NO. MST-9
SHEET NO. 85

IT IS A VIOLATION OF LAW FOR ANY PERSON, UNLESS THEY ARE ACTING UNDER THE DIRECTION OF A LICENSED PROFESSIONAL ENGINEER, ARCHITECT, LANDSCAPE ARCHITECT, OR LAND SURVEYOR, TO ALTER AN ITEM IN ANY WAY. IF AN ITEM BEARING THE STAMP OF A LICENSED PROFESSIONAL IS ALTERED, THE ALTERING ENGINEER, ARCHITECT, LANDSCAPE ARCHITECT, OR LAND SURVEYOR SHALL STAMP THE DOCUMENT AND INCLUDE THE NOTATION "ALTERED BY" FOLLOWED BY THEIR SIGNATURE, THE DATE OF SUCH ALTERATION, AND A SPECIFIC DESCRIPTION OF THE ALTERATION.

NEW YORK STATE OF OPPORTUNITY. Department of Transportation

DESIGN SUPERVISOR S. S. VAIDYA JOB MANAGER R. F. SCHALLER DESIGN C. L. CRITES CHECK R. F. SCHALLER DRAFTING C. L. CRITES CHECK R. F. SCHALLER PROJECT MANAGER S. S. VAIDYA

FILE NAME = 581361_CPH_HWY_MST-9.dgn
DATE/TIME = 22-JUN-2021 12:38
USER = ccrites

TABLE 2

TABLE OF TEMPORARY AND PERMANENT PAVEMENT MARKINGS

ROADWAY MARKINGS	LOCATION		LENGTH	"L" FACTOR	619.0901 (LF)		685.11 (LF)		685.11120009 (LF)	685.12 (LF)	685.13 (EA)	685.14 (EA)	640.10 (LF)	640.11 (LF)	REMARKS
WHITE - DOTTED EXTENSTION LINES	DIRECTING TO WEHRLE (W)		148	0.33	(4")	49	(4")	49					49		FROM TRANSIT(N) TO WEHRLE(W)
WHITE - DOTTED EXTENSTION LINES	DIRECTING TO WEHRLE (E)		145	0.33	(4")	48	(4")	48					48		FROM TRANSIT(S) TO WEHRLE(E)
WHITE - DOTTED EXTENSTION LINES	DIRECTING TO TRANSIT (N)		147	0.33	(4")	49	(4")	49					49		FROM WEHRLE(W) TO TRANSIT(N)
WHITE - DOTTED EXTENSTION LINES	DIRECTING TO TRANSIT (S)		147	0.33	(4")	49	(4")	49					49		FROM WEHRLE(E) TO TRANSIT(S)
WHITE - DOTTED LINES SHORT LT)	37+84	39+70	186	0.33	(4")	62	(4")	62					62		NB
WHITE - DOTTED LINES SHORT (RT)	39+87	41+38	151	0.33	(4")	50	(4")	50					50		SB
WHITE - DOTTED LINES SHORT (LT)	50+53	53+31	278	0.33	(4")	93	(4")	93					93		NB
WHITE - DOTTED LINES SHORT (LT)	50+53	53+31	278	0.33	(4")	93	(4")	93					93		NB
WHITE - DOTTED LINES SHORT (LT)	51+15	53+83	268	0.33	(4")	89	(4")	89					89		NB
WHITE - DOTTED LINES SHORT (RT)	59+29	62+03	274	0.33	(4")	91	(4")	91					91		SB
WHITE - DOTTED LINES SHORT (RT)	63+59	64+19	60	0.33	(4")	20	(4")	20					20		SB
WHITE - DOTTED EXTENSTION LINES	DIRECTING TO I90 RAMP		118	0.33	(4")	39	(4")	39					39		TO I90 RAMP
WHITE - DOTTED LINES SHORT (RT)	72+09	72+68	59	0.33	(4")	20	(4")	20					20		SB
WHITE - DOTTED LINES SHORT (LT)	72+54	73+21	67	0.33	(4")	22	(4")	22					22		NB
WHITE - DOTTED LINES SHORT (LT)	76+86	77+37	51	0.33	(4")	17	(4")	17					17		NB
WHITE - DOTTED LINES SHORT (RT)	95+13	96+20	107	0.33	(4")	36	(4")	36					36		SB
WHITE - DOTTED EXTENSTION LINES	DIRECTING TO TRANSIT (N)		147	0.33	(4")	49	(4")	49					49		FROM GENESEE(W) TO TRANSIT(N)
WHITE - DOTTED EXTENSTION LINES	DIRECTING TO GENESEE (W)		109	0.33	(4")	36	(4")	36					36		FROM TRANSIT(N) TO GENESEE (W)
WHITE - DOTTED EXTENSTION LINES	DIRECTING TO TRANSIT (S)		151	0.33	(4")	50	(4")	50					50		FROM GENESEE(E) TO TRANSIT(S)
WHITE - DOTTED LINES SHORT (RT)	98+92	100+18	126	0.33	(4")	42	(4")	42					42		SB
WHITE - DOTTED LINES SHORT (LT)	103+67	104+45	78	0.33	(4")	26	(4")	26					26		NB
WHITE - DOTTED LINES SHORT (RT)	110+34	111+10	76	0.33	(4")	25	(4")	25					25		SB
WHITE - DOTTED LINES SHORT (LT)	114+66	115+34	68	0.33	(4")	23	(4")	23					23		NB
WHITE - DOTTED LINES SHORT (RT)	125+08	126+15	107	0.33	(4")	36	(4")	36					36		SB
WHITE - DOTTED LINES SHORT (LT)	129+00	129+97	97	0.33	(4")	32	(4")	32					32		NB
WHITE - DOTTED LINES SHORT (LT)	129+53	130+89	136	0.33	(4")	45	(4")	45					45		NB
WHITE - DOTTED LINES SHORT (LT)	167+83	168+58	75	0.33	(4")	25	(4")	25					25		SB
WHITE - DOTTED LINES SHORT (LT)	171+34	171+95	61	0.33	(4")	20	(4")	20					20		NB
WHITE - DOTTED LINES SHORT (RT)	G 281+11	G 282+24	113	0.33	(4")	38	(4")	38					38		EB
WHITE - DOTTED LINES SHORT (LT)	G 288+03	G 289+20	117	0.33	(4")	39	(4")	39					39		WB
WHITE - DOTTED LINES SHORT (RT)	G 287+34	G 288+34	100	0.33	(4")	33	(4")	33					33		EB
WHITE - DOTTED LINES SHORT (LT)	FW 1+06	FW 1+50	44	0.33	(4")	15	(4")	15					15		EB
WHITE - DOTTED LINES SHORT (LT)	FE 1+10	FE 1+55	45	0.33	(4")	15	(4")	15					15		WB
WHITE - WIDE DOTTED LANE LINES (LT)	91+13	96+20	507	0.5	(8")	254	(8")	254					254		SB
WHITE - WIDE DOTTED LANE LINES (RT)	G 277+02	G 281+84	482	0.5	(8")	241	(8")	241					241		WB
WHITE - LANE LINE - SOLID (LT)	33+37	36+49	312	1	(4")	312	(4")	312					312		NB
WHITE - LANE LINE - SOLID (LT)	33+37	37+83	446	1	(4")	446	(4")	446					446		NB
WHITE - LANE LINE - SOLID (LT X2)	33+37	34+65	256	1	(4")	256	(4")	256					256		NB
WHITE - LANE LINE - SOLID (LT)	33+35	38+14	479	1	(4")	479	(4")	479					479		NB
WHITE - LANE LINE - SOLID (RT)	41+38	46+21	483	1	(4")	483	(4")	483					483		SB
WHITE - LANE LINE - SOLID (RT X2)	44+90	46+20	260	1	(4")	260	(4")	260					260		SB
WHITE - LANE LINE - SOLID (LT X2)	47+76	49+23	294	1	(4")	294	(4")	294					294		NB
WHITE - LANE LINE - SOLID (LT)	47+76	50+53	277	1	(4")	277	(4")	277					277		NB
WHITE - LANE LINE - SOLID (LT)	47+76	51+15	339	1	(4")	339	(4")	339					339		NB
WHITE - LANE LINE - SOLID (RT)	56+84	57+78	94	1	(4")	94	(4")	94					94		SB
WHITE - LANE LINE - SOLID (RT)	62+03	64+96	293	1	(4")	293	(4")	293					293		SB
WHITE - LANE LINE - SOLID (RT)	64+19	65+87	168	1	(4")	168	(4")	168					168		SB
WHITE - LANE LINE - SOLID (RT X2)	64+45	65+87	284	1	(4")	284	(4")	284					284		SB
WHITE - LANE LINE - SOLID (LT)	67+33	72+54	521	1	(4")	521	(4")	521					521		NB
WHITE - LANE LINE - SOLID (LT)	67+33	68+86	153	1	(4")	153	(4")	153					153		NB
WHITE - LANE LINE - SOLID (RT X3)	72+68	74+07	417	1	(4")	417	(4")	417					417		SB
WHITE - LANE LINE - SOLID (LT)	75+03	76+86	183	1	(4")	183	(4")	183					183		NB
WHITE - LANE LINE - SOLID (LT)	75+03	76+03	100	1	(4")	100	(4")	100					100		NB
WHITE - LANE LINE - SOLID (RT)	96+20	98+96	276	1	(4")	276	(4")	276					276		SB
WHITE - LANE LINE - SOLID (RT)	97+91	98+91	100	1	(4")	100	(4")	100					100		SB
WHITE - LANE LINE - SOLID (LT X2)	100+26	103+67	682	1	(4")	682	(4")	682					682		NB
WHITE - LANE LINE - SOLID (LT)	100+18	101+18	100	1	(4")	100	(4")	100					100		NB
WHITE - LANE LINE - SOLID (RT)	111+10	112+61	151	1	(4")	151	(4")	151					151		SB
WHITE - LANE LINE - SOLID (RT)	111+61	112+61	100	1	(4")	100	(4")	100					100		SB
WHITE - LANE LINE - SOLID (LT X2)	113+66	114+66	200	1	(4")	200	(4")	200					200		NB
WHITE - LANE LINE - SOLID (RT)	125+99	126+99	100	1	(4")	100	(4")	100					100		SB
WHITE - LANE LINE - SOLID (RT)	126+15	126+99	84	1	(4")	84	(4")	84					84		SB
WHITE - LANE LINE - SOLID (LT)	128+18	129+00	82	1	(4")	82	(4")	82					82		NB
WHITE - LANE LINE - SOLID (LT)	128+18	129+18	100	1	(4")	100	(4")	100					100		NB
WHITE - LANE LINE - SOLID (LT)	128+18	129+53	135	1	(4")	135	(4")	135					135		NB
WHITE - LANE LINE - SOLID (LT)	168+53	169+53	100	1	(4")	100	(4")	100					100		NB
WHITE - LANE LINE - SOLID (RT)	168+58	169+53	95	1	(4")	95	(4")	95					95		SB
WHITE - LANE LINE - SOLID (LT)	170+46	171+34	88	1	(4")	88	(4")	88					88		NB
WHITE - LANE LINE - SOLID (LT)	170+46	171+46	100	1	(4")	100	(4")	100					100		NB
WHITE - LANE LINE - SOLID (RT)	FE 8+77	FE 9+32	55	1	(4")	55	(4")	55					55		EB
WHITE - LANE LINE - SOLID (LT X2)	FE 10+81	FE 11+36	110	1	(4")	110	(4")	110					110		WB
WHITE - LANE LINE - SOLID	To I90 Ramp radius		47	1	(4")	47	(4")	47					47		TO I90 RAMP
WHITE - LANE LINE - SOLID	Salvatore's Garden Place Hotel		66	1	(4")	66	(4")	66					66		WB
WHITE - LANE LINE - SOLID (RT)	G 281+84	G 284+40	256	1	(4")	256	(4")	256					256		EB
WHITE - LANE LINE - SOLID (RT X2)	G 282+24	G 284+45	442	1	(4")	442	(4")	442					442		EB
WHITE - LANE LINE - SOLID (RT)	G 283+42	G 284+42	100	1	(4")	100	(4")	100					100		EB
WHITE - LANE LINE - SOLID (LT)	G 286+06	G 287+70	164	1	(4")	164	(4")	164					164		WB
WHITE - LANE LINE - SOLID (LT)	G 286+08	G 288+02	194	1	(4")	194	(4")	194					194		WB
WHITE - LANE LINE - SOLID (LT)	G 286+10	G 287+10	100	1	(4")	100	(4")	100					100		WB
WHITE - LANE LINE - SOLID (RT)	G 288+83	G 289+20	37	1	(4")	37	(4")	37					37		EB
WHITE - LANE LINE - SOLID (LT)	PV 0+56	PV 1+19	63	1	(4")	63	(4")	63					63		WB

TEMPORARY & FINAL PAVEMENT MARKINGS CONTINUE ON DWG. MST-11, TABLE 3

AFFIX SEAL:
ON:

ALTERED BY:
ON:

D264571

STATE OF NEW YORK
ROBERT F. SCHALLER
NO. 082465
LICENSED PROFESSIONAL ENGINEER

AS-BUILT REVISIONS
DESCRIPTION OF ALTERATIONS:

NY 78, TRANSIT ROAD, S.H. 1334A-1
FRENCH ROAD TO WEHRLE DRIVE
TOWNS OF CHEEKTOWAGA & LANCASTER
VILLAGE OF DEPEW
COUNTY: ERIE REGION: 05

PIN 5813.61
NY 78
UTILITY QUALITY LEVEL D

BRIDGES

CULVERTS

ALL DIMENSIONS IN ft UNLESS OTHERWISE NOTED

MISCELLANEOUS TABLES - SHEET 10

CONTRACT NUMBER
D264571

DRAWING NO. MST-10
SHEET NO. 86

IT IS A VIOLATION OF LAW FOR ANY PERSON, UNLESS THEY ARE ACTING UNDER THE DIRECTION OF A LICENSED PROFESSIONAL ENGINEER, ARCHITECT, LANDSCAPE ARCHITECT, OR LAND SURVEYOR, TO ALTER AN ITEM IN ANY WAY. IF AN ITEM BEARING THE STAMP OF A LICENSED PROFESSIONAL IS ALTERED, THE ALTERING ENGINEER, ARCHITECT, LANDSCAPE ARCHITECT, OR LAND SURVEYOR SHALL STAMP THE DOCUMENT AND INCLUDE THE NOTATION "ALTERED BY" FOLLOWED BY THEIR SIGNATURE, THE DATE OF SUCH ALTERATION, AND A SPECIFIC DESCRIPTION OF THE ALTERATION.

NEW YORK STATE OF OPPORTUNITY. Department of Transportation

DESIGN SUPERVISOR S. S. VAIDYA JOB MANAGER R. F. SCHALLER DESIGN C. L. CRITES CHECK R. F. SCHALLER DRAFTING C. L. CRITES CHECK R. F. SCHALLER PROJECT MANAGER S. S. VAIDYA

FILE NAME = 581361_CPH_HWY_MST-10.dgn
DATE/TIME = 22-JUN-2021 12:38
USER = cprites

TABLE OF TEMPORARY AND PERMANENT PAVEMENT MARKINGS

ROADWAY MARKINGS	LOCATION		LENGTH	"L" FACTOR	619.0901 (LF)	685.11 (LF)	685.11120009 (LF)	685.12 (LF)	685.13 (EA)	685.14 (EA)	640.10 (LF)	640.11 (LF)	REMARKS
WHITE - LANE LINE - SOLID	Tops Exit		41	1	(4") 41	(4") 41					41		WB
WHITE - LANE LINE - SOLID (LT)	FW 0+46	FW 1+06	60	1	(4") 60	(4") 60					60		EB
WHITE - LANE LINE - SOLID (LT)	FE 0+67	FE 1+11	44	1	(4") 44	(4") 44					44		WB
WHITE - EDGE LINE - SOLID (RT)	33+31	46+24	1,293	1	(4") 1,293	(4") 1,293					1,293		SB
WHITE - EDGE LINE - SOLID (LT)	33+35	46+30	1,295	1	(4") 1,295	(4") 1,295					1,295		NB
WHITE - EDGE LINE - SOLID (RT)	RADIUS NW FREEMAN		55	1	(4") 55	(4") 55					55		INTERSECTION AT FREEMAN
WHITE - EDGE LINE - SOLID (LT)	RADIUS NE FREEMAN		63	1	(4") 63	(4") 63					63		INTERSECTION AT FREEMAN
WHITE - EDGE LINE - SOLID (RT)	RADIUS SW FREEMAN		62	1	(4") 62	(4") 62					62		INTERSECTION AT FREEMAN
WHITE - EDGE LINE - SOLID (RT)	RADIUS SE FREEMAN		67	1	(4") 67	(4") 67					67		INTERSECTION AT FREEMAN
WHITE - EDGE LINE - SOLID (LT)	RADIUS NE MAPLE		36	1	(4") 36	(4") 36					36		INTERSECTION AT MAPLE
WHITE - EDGE LINE - SOLID (LT)	RADIUS SE MAPLE		43	1	(4") 43	(4") 43					43		INTERSECTION AT MAPLE
WHITE - EDGE LINE - SOLID (RT)	64+96	65+88	92	1	(4") 92	(4") 92					92		SB
WHITE - EDGE LINE - SOLID (LT)	67+32	90+84	2,352	1	(4") 2,352	(4") 2,352					2,352		NB
WHITE - EDGE LINE - SOLID (RT)	67+25	72+09	484	1	(4") 484	(4") 484					484		SB
WHITE - EDGE LINE - SOLID (RT)	RADIUS NW AERO		81	1	(4") 81	(4") 81					81		INTERSECTION AT AERO
WHITE - EDGE LINE - SOLID (RT)	RADIUS SW AERO		56	1	(4") 56	(4") 56					56		INTERSECTION AT AERO
WHITE - EDGE LINE - SOLID (RT)	75+35	90+85	1,550	1	(4") 1,550	(4") 1,550					1,550		SB
WHITE - EDGE LINE - SOLID (LT)	RADIUS NE PFOHL		39	1	(4") 39	(4") 39					39		INTERSECTION AT PFOHL
WHITE - EDGE LINE - SOLID (RT)	RADIUS NW PFOHL		25	1	(4") 25	(4") 25					25		INTERSECTION AT PFOHL
WHITE - EDGE LINE - SOLID (LT)	RADIUS SE PFOHL		34	1	(4") 34	(4") 34					34		INTERSECTION AT PFOHL
WHITE - EDGE LINE - SOLID (RT)	RADIUS SW PFOHL		30	1	(4") 30	(4") 30					30		INTERSECTION AT PFOHL
WHITE - EDGE LINE - SOLID (RT)	92+03	96+20	417	1	(4") 417	(4") 417					417		SB
WHITE - EDGE LINE - SOLID (LT)	92+20	96+20	400	1	(4") 400	(4") 400					400		NB
WHITE - EDGE LINE - SOLID (RT)	FE 8+77	FE 9+07	30	1	(4") 30	(4") 30					30		NB
WHITE - EDGE LINE - SOLID (LT)	FE 8+77	FE 9+13	36	1	(4") 36	(4") 36					36		NB
WHITE - EDGE LINE - SOLID (LT)	FE 10+79	FE 11+33	54	1	(4") 54	(4") 54					54		NB
WHITE - EDGE LINE - SOLID (RT)	FE 11+14	FE 11+42	28	1	(4") 28	(4") 28					28		NB
WHITE - EDGE LINE - SOLID (LT)	M 0+66	M 0+89	23	1	(4") 23	(4") 23					23		NB
WHITE - EDGE LINE - SOLID (RT)	A 0+91	A 1+24	33	1	(4") 33	(4") 33					33		NB
WHITE - EDGE LINE - SOLID (RT)	A 0+89	A 1+24	35	1	(4") 35	(4") 35					35		NB
CROSSWALK - 111.0 LF x 2 OUTER STRIPES	WEHRLE DR(NORTH)		222	3			(12") 666						
LADDER BAR STRIPES: QTY. 37 @ 6.0' EA.			222	3			(12") 666						
CROSSWALK - 95.0 LF x 2 OUTER STRIPES	WEHRLE DR(EAST)		190	3			(12") 570						
LADDER BAR STRIPES: QTY. 32 @ 6.0' EA.			192	3			(12") 576						
CROSSWALK - 90.0 LF x 2 OUTER STRIPES	WEHRLE DR(WEST)		180	3			(12") 540						
LADDER BAR STRIPES: QTY. 30 @ 6.0' EA.			180	3			(12") 540						
CROSSWALK - 110.0 LF x 2 OUTER STRIPES	WEHRLE DR(SOUTH)		220	3			(12") 660						
LADDER BAR STRIPES: QTY. 37 @ 6.0' EA.			222	3			(12") 666						
CROSSWALK - 86.0 LF x 2 OUTER STRIPES	FREEMAN (NORTH)		172	3			(12") 516						
LADDER BAR STRIPES: QTY. 29 @ 6.0' EA.			174	3			(12") 522						
CROSSWALK - 86.0 LF x 2 OUTER STRIPES	FREEMAN (EAST)		172	3			(12") 516						
LADDER BAR STRIPES: QTY. 29 @ 6.0' EA.			174	3			(12") 522						
CROSSWALK - 60.0 LF x 2 OUTER STRIPES	FREEMAN (WEST)		120	3			(12") 360						
LADDER BAR STRIPES: QTY. 20 @ 6.0' EA.			120	3			(12") 360						
CROSSWALK - 111.0 LF x 2 OUTER STRIPES	FREEMAN (SOUTH)		222	3			(12") 666						
LADDER BAR STRIPES: QTY. 37 @ 6.0' EA.			222	3			(12") 666						
CROSSWALK - 22.0 LF x 2 OUTER STRIPES	TO I90 RAMP		44	3			(12") 132						
LADDER BAR STRIPES: QTY. 7 @ 6.0' EA.			42	3			(12") 126						
CROSSWALK - 81.0 LF x 2 OUTER STRIPES	SALVATORE'S (NORTH)		162	3			(12") 486						
LADDER BAR STRIPES: QTY. 27 @ 6.0' EA.			162	3			(12") 486						
CROSSWALK - 52.0 LF x 2 OUTER STRIPES	SALVATORE'S (EAST)		104	3			(12") 312						
LADDER BAR STRIPES: QTY. 17 @ 6.0' EA.			102	3			(12") 306						
CROSSWALK - 78.0 LF x 2 OUTER STRIPES	SALVATORE'S (WEST)		156	3			(12") 468						
LADDER BAR STRIPES: QTY. 26 @ 6.0' EA.			156	3			(12") 468						
CROSSWALK - 98.0 LF x 2 OUTER STRIPES	SALVATORE'S (SOUTH)		196	3			(12") 588						
LADDER BAR STRIPES: QTY. 33 @ 6.0' EA.			198	3			(12") 594						
CROSSWALK - 95.0 LF x 2 OUTER STRIPES	GENESEE (NORTH)		190	3			(12") 570						
LADDER BAR STRIPES: QTY. 32 @ 6.0' EA.			64	3			(12") 192						
CROSSWALK - 77.0 LF x 2 OUTER STRIPES	GENESEE (EAST)		148	3			(12") 444						
LADDER BAR STRIPES: QTY. 26 @ 6.0' EA.			156	3			(12") 468						
CROSSWALK - 96.0 LF x 2 OUTER STRIPES	GENESEE (WEST)		192	3			(12") 576						
LADDER BAR STRIPES: QTY. 32 @ 6.0' EA.			192	3			(12") 576						
CROSSWALK - 91.0 LF x 2 OUTER STRIPES	GENESEE (SOUTH)		186	3			(12") 558						
LADDER BAR STRIPES: QTY. 31 @ 6.0' EA.			186	3			(12") 558						
CROSSWALK - 47.0 LF x 2 OUTER STRIPES	PLEASANTVIEW (EAST)		94	3			(12") 282						
LADDER BAR STRIPES: QTY. 16 @ 6.0' EA.			96	3			(12") 288						
CROSSWALK - 67.0 LF x 2 OUTER STRIPES	PLEASANTVIEW (SOUTH)		134	3			(12") 402						
LADDER BAR STRIPES: QTY. 22 @ 6.0' EA.			132	3			(12") 396						
CROSSWALK - 62.0 LF x 2 OUTER STRIPES	TOPS MARKETS (NORTH)		124	3			(12") 372						
LADDER BAR STRIPES: QTY. 21 @ 6.0' EA.			126	3			(12") 378						
CROSSWALK - 68.0 LF x 2 OUTER STRIPES	TOPS MARKETS (EAST)		136	3			(12") 408						
LADDER BAR STRIPES: QTY. 23 @ 6.0' EA.			138	3			(12") 414						
CROSSWALK - 63.0 LF x 2 OUTER STRIPES	MACDONALD'S (WEST)		126	3			(12") 378						
LADDER BAR STRIPES: QTY. 21 @ 6.0' EA.			126	3			(12") 378						
CROSSWALK - 68.0 LF x 2 OUTER STRIPES	TOPS MARKETS (SOUTH)		136	3			(12") 408						
LADDER BAR STRIPES: QTY. 23 @ 6.0' EA.			138	3			(12") 414						
CROSSWALK - 67.0 LF x 2 OUTER STRIPES	FRENCH (NORTH)		134	3			(12") 402						
LADDER BAR STRIPES: QTY. 22 @ 6.0' EA.			132	3			(12") 396						

TABLE 3

TEMPORARY & FINAL PAVEMENT MARKINGS CONTINUE ON DWG. MST-12, TABLE 4

AFFIX SEAL:
ON:

D264571

STATE OF NEW YORK · ROBERT F. SCHALLER · LICENSED PROFESSIONAL ENGINEER · NO. 082465

ALTERED BY:
ON:

AS-BUILT REVISIONS
DESCRIPTION OF ALTERATIONS:

NY 78, TRANSIT ROAD, S.H. 1334A-1
FRENCH ROAD TO WEHRLE DRIVE
TOWNS OF CHEEKTOWAGA & LANCASTER
VILLAGE OF DEPEW
COUNTY: ERIE REGION: 05

PIN 5813.61
NY 78
UTILITY QUALITY LEVEL D

BRIDGES

CULVERTS

ALL DIMENSIONS IN ft UNLESS OTHERWISE NOTED

MISCELLANEOUS TABLES - SHEET 11

CONTRACT NUMBER
D264571

DRAWING NO. MST-11
SHEET NO. 87

IT IS A VIOLATION OF LAW FOR ANY PERSON, UNLESS THEY ARE ACTING UNDER THE DIRECTION OF A LICENSED PROFESSIONAL ENGINEER, ARCHITECT, LANDSCAPE ARCHITECT, OR LAND SURVEYOR, TO ALTER AN ITEM IN ANY WAY. IF AN ITEM BEARING THE STAMP OF A LICENSED PROFESSIONAL IS ALTERED, THE ALTERING ENGINEER, ARCHITECT, LANDSCAPE ARCHITECT, OR LAND SURVEYOR SHALL STAMP THE DOCUMENT AND INCLUDE THE NOTATION "ALTERED BY" FOLLOWED BY THEIR SIGNATURE, THE DATE OF SUCH ALTERATION, AND A SPECIFIC DESCRIPTION OF THE ALTERATION.

NEW YORK STATE OF OPPORTUNITY. Department of Transportation

DESIGN SUPERVISOR S. S. VAIDYA JOB MANAGER R. F. SCHALLER DESIGN C. L. CRITES CHECK R. F. SCHALLER DRAFTING C. L. CRITES CHECK R. F. SCHALLER PROJECT MANAGER S. S. VAIDYA

FILE NAME = 581361_CPH_HWY_MST-11.dgn
DATE/TIME = 22-JUN-2021 12:39
USER = scrites

TABLE OF TEMPORARY AND PERMANENT PAVEMENT MARKINGS

ROADWAY MARKINGS	LOCATION	LENGTH	"L" FACTOR	619.0901 (LF)	685.11 (LF)	685.11120009 (LF)	685.12 (LF)	685.13 (EA)	685.14 (EA)	640.10 (LF)	640.11 (LF)	REMARKS
CROSSWALK - 43.0 LF x 2 OUTER STRIPES	FRENCH (EAST)	86	3			(12") 258						
LADDER BAR STRIPES: QTY. 14 @ 6.0' EA.		84	3			(12") 252						
CROSSWALK - 43.0 LF x 2 OUTER STRIPES	FRENCH (WEST)	86	3			(12") 258						
LADDER BAR STRIPES: QTY. 14 @ 6.0' EA.		84	3			(12") 252						
CROSSWALK - 65.0 LF x 2 OUTER STRIPES	FRENCH (SOUTH)	130	3			(12") 390						
LADDER BAR STRIPES: QTY. 22 @ 6.0' EA.		132	3			(12") 396						
CROSSWALK ONLY TRANSVERSE LINE	MAPLE (EAST)	65	3			(12") 195						
CROSSWALK ONLY TRANSVERSE LINE	AERO DRIVE (WEST)	171	3			(12") 513						
CROSSWALK ONLY TRANSVERSE LINE	PASQUALE DRIVE (EAST)	43	3			(12") 129						
CROSSWALK ONLY TRANSVERSE LINE	CLOVERLEAF (WEST)	36	3			(12") 107						
YELLOW HATCHING (24" W)	73+02 - 74+07	159	6			(24") 954						
FRAME FOR YELLOW HATCHING(4")	72+89 - 74+15	133	0.33			(4") 44						
YELLOW HATCHING (24" W)	82+18 - 89+52	575	6			(24") 3,450						
YELLOW - FULL BARRIER (X2)	82+18 89+78	1,520	2	(4") 3,040			(4") 3,040				3,040	
YELLOW HATCHING (24" W)	96+30 - 98+86	219	6			(24") 1,314						
FRAME FOR YELLOW HATCHING(4") (X2)	96+20 98+87	534	0.33			(4") 176						
YELLOW HATCHING (24" W)	G 288+92 - G 290+58	106	6			(24") 636						
YELLOW HATCHING (24" W)	FW 1+50 - FW 1+60	7	6			(24") 42						
YELLOW HATCHING (24" W)	FE 1+57 - FE 1+73	13	6			(24") 78						
STOP BARS (18" W)	WEHRLE (NORTH)	67	4.5			(18") 302						
STOP BAR (18" W)	WEHRLE (EAST)	58	4.5			(18") 261						
STOP BAR (18" W)	WEHRLE (WEST)	55	4.5			(18") 248						
STOP BAR (18" W)	WEHRLE (SOUTH)	63	4.5			(18") 284						
STOP BAR (18" W)	FREEMAN (NORTH)	43	4.5			(18") 194						
STOP BARS (18" W)	FREEMAN (EAST)	32	4.5			(18") 144						
STOP BAR (18" W)	FREEMAN (WEST)	31	4.5			(18") 140						
STOP BAR (18" W)	FREEMAN (SOUTH)	64	4.5			(18") 288						
STOP BAR (18" W)	MAPLE	17	4.5			(18") 77						
STOP BAR (18" W)	SALVATORE'S (NORTH)	44	4.5			(18") 198						
STOP BARS (18" W)	SALVATORE'S (EAST)	26	4.5			(18") 117						
STOP BARS (18" W)	FROM I90 (WEST)	42	4.5			(18") 189						
STOP BAR (18" W)	SALVATORE'S (SOUTH)	36	4.5			(18") 162						
STOP BARS (18" W)	AERO (NORTH)	36	4.5			(18") 162						
STOP BARS (18" W)	AERO (WEST)	27	4.5			(18") 122						
STOP BAR (18" W)	AERO (SOUTH)	49	4.5			(18") 221						
STOP BAR (18" W)	PFOHL DRIVE (WEST)	19	4.5			(18") 86						
STOP BARS (18" W)	GENESEE (NORTH)	59	4.5			(18") 266						
STOP BARS (18" W)	GENESEE (EAST)	51	4.5			(18") 230						
STOP BARS (18" W)	GENESEE (WEST)	62	4.5			(18") 279						
STOP BARS (18" W)	GENESEE (SOUTH)	51	4.5			(18") 230						
STOP BARS (18" W)	PLEASANTVIEW (NORTH)	35	4.5			(18") 158						
STOP BARS (18" W)	PLEASANTVIEW (EAST)	20	4.5			(18") 90						
STOP BARS (18" W)	CLOVERLEAF (WEST)	13	4.5			(18") 59						
STOP BARS (18" W)	PLEASANTVIEW (SOUTH)	35	4.5			(18") 158						
STOP BARS (18" W)	TOPS MARKETS (NORTH)	35	4.5			(18") 158						
STOP BARS (18" W)	TOPS MARKETS (EAST)	25	4.5			(18") 113						
STOP BARS (18" W)	MACDONALD'S (WEST)	25	4.5			(18") 113						
STOP BARS (18" W)	TOPS MARKETS (SOUTH)	43	4.5			(18") 194						
STOP BARS (18" W)	REHM (EAST)	10	4.5			(18") 45						
STOP BARS (18" W)	REHM (WEST)	16	4.5			(18") 72						
STOP BARS (18" W)	HANWELL (EAST)	16	4.5			(18") 72						
STOP BARS (18" W)	LEE (WEST)	16	4.5			(18") 72						
STOP BARS (18" W)	AIRVIEW (WEST)	13	4.5			(18") 59						
STOP BARS (18" W)	ENTRY (EAST)	15	4.5			(18") 68						
STOP BARS (18" W)	ARGUS (EAST)	13	4.5			(18") 59						
STOP BARS (18" W)	FRENCH (NORTH)	34	4.5			(18") 153						
STOP BARS (18" W)	FRENCH (EAST)	23	4.5			(18") 104						
STOP BARS (18" W)	FRENCH (WEST)	26	4.5			(18") 117						
STOP BARS (18" W)	FRENCH (SOUTH)	36	4.5			(18") 162						
LETTERS - ONLY	33+69							8				NB
LETTERS - ONLY	34+98							8				NB
LETTERS - ONLY	36+25							8				NB
LETTERS - ONLY	68+19							4				NB
LETTERS - ONLY	69+16							4				NB
LETTERS - ONLY	70+10							4				NB
LETTERS - ONLY	72+99							4				SB
LETTERS - ONLY	73+58							4				SB
LETTERS - ONLY	96+70							4				SB
LETTERS - ONLY	97+69							4				SB
LETTERS - ONLY	98+57							4				SB

TABLE 4

TEMPORARY & FINAL PAVEMENT MARKINGS CONTINUE ON DWG. MST-13 TABLE 5

AFFIX SEAL:
ON:

D264571

STATE OF NEW YORK
ROBERT F. SCHALLER
NO. 082465
LICENSED PROFESSIONAL ENGINEER

ALTERED BY:
ON:

AS-BUILT REVISIONS
DESCRIPTION OF ALTERATIONS:

NY 78, TRANSIT ROAD, S.H. 1334A-1
FRENCH ROAD TO WEHRLE DRIVE
TOWNS OF CHEEKTOWAGA & LANCASTER
VILLAGE OF DEPEW
COUNTY: ERIE REGION: 05

PIN 5813.61
NY 78
UTILITY QUALITY LEVEL D

BRIDGES

CULVERTS

ALL DIMENSIONS IN ft UNLESS OTHERWISE NOTED

MISCELLANEOUS TABLES - SHEET 12

CONTRACT NUMBER
D264571

DRAWING NO. MST-12
SHEET NO. 88

IT IS A VIOLATION OF LAW FOR ANY PERSON, UNLESS THEY ARE ACTING UNDER THE DIRECTION OF A LICENSED PROFESSIONAL ENGINEER, ARCHITECT, LANDSCAPE ARCHITECT, OR LAND SURVEYOR, TO ALTER AN ITEM IN ANY WAY. IF AN ITEM BEARING THE STAMP OF A LICENSED PROFESSIONAL IS ALTERED, THE ALTERING ENGINEER, ARCHITECT, LANDSCAPE ARCHITECT, OR LAND SURVEYOR SHALL STAMP THE DOCUMENT AND INCLUDE THE NOTATION "ALTERED BY" FOLLOWED BY THEIR SIGNATURE, THE DATE OF SUCH ALTERATION, AND A SPECIFIC DESCRIPTION OF THE ALTERATION.

NEW YORK STATE OF OPPORTUNITY. Department of Transportation

DESIGN SUPERVISOR S. S. VAIDYA JOB MANAGER R. F. SCHALLER DESIGN C. L. CRITES CHECK R. F. SCHALLER DRAFTING C. L. CRITES CHECK R. F. SCHALLER PROJECT MANAGER S. S. VAIDYA

FILE NAME = 581361_CPH_HWY_MST-12.dgn
DATE/TIME = 22-JUN-2021 12:39
USER = cprites

TRANSIT ROAD, PART 4, S.H. 1334A-1

TABLE OF RIGHT OF WAY TO BE AQURIE BY THE STATE OF NEW YORK

MAP NO.	PARCEL NO.	SHEET NO.	TRN	BASELINE STATION P.O.B.	TYPE	AQUIRED AREA (SF)	REPUTED OWNER	ORGINAL AREA SF	REMAINDER AREA SF	LIBER PAGE OR INSTUMENT NO.		TAX MAP DESIGNATION	REMARKS
286	333		1	15+88 ± LT.	FEE	645	IJK REALITY ASSOCIATES	15292	14647	11149	5458	104.05-3-7	
287	334		2	16+37 ± LT.	FEE	333	570 ASSOCIATES XV LLC	47322	46989	11310	2917	93.17-10-22.1	
288	335		3	19+00 ± RT.	FEE	49	DENNIS WALCZAK AND DONNA WALCZAK	9327	9278	11103	9082	93.17-6-65	
289	336		4	19+91 ± RT.	FEE	39	NICKEL CITY ENTERPRISES LLC	98706	98667	11287	2181	93.17-6-1	
290	337		5	35+36 ± LT.	FEE	13	B.R. PROPERTY MANAGEMENT INC.	6212	6199	11223	7156	93.17-8-20	
291	338		6	38+71 ± RT.	FEE	52	6221 TRANSIT ROAD ASSOCIATES, LLC	63158	63106	10961	7137	93.17-1-5	
292	339		7	40+81 ± RT.	FEE	622	TRANS DEPEW ASSOCIATES, INC.	36742	36120	8476	30	93.17-1-4	
293	340		8	42+00 ± RT.	P.E.	355	NOCO EXPRESS PROPERTIES, LLC	11899	11544	11153	7883	93.17-1-1	FOR HIGHWAY PURPOSES
294	341		16	50+00 ± LT.	FEE	176	NMF RENTALS LLC	38878	38702	11139	8371	93.13-4-29	
295	344		11	58+98 ± RT.	P.E.	1915	LANCASTER-REHM ASSOCIATES, LLC	245490	243575	10951	9378	93.13-3-1.1	FOR TRAFFIC CONTROL DEVICE
295	343		11	58+98 ± RT.	FEE	191	LANCASTER-REHM ASSOCIATES, LLC	245490	245299	10951	9378	93.13-3-1.1	
295	342		11	57+96 ± RT.	FEE	109	LANCASTER-REHM ASSOCIATES, LLC	245490	245381	10951	9378	93.13-3-1.1	
296	345		11	57+96 ± RT.	T.E.	315	LANCASTER-REHM ASSOCIATES, LLC	245490	245175	10951	9378	93.13-3-1.2	FOR WORK AREA
297	346		9	58+24 ± LT.	P.E.	1666	R.M.F. HOLDING CORPORATION	49489	47823	7382	167	93.13-10-1.112	FOR TRAFFIC CONTROL DEVICE
298	347		9	58+91 ± LT.	T.E.	21	R.M.F. HOLDING CORPORATION	49489	49468	7382	167	93.13-10-1.111	FOR WORK AREA
299	348		10	58+91 ± LT.	T.E.	78	NATIONAL RETAIL PROPERTIES, LP	59779	59701	11254	6444	93.13-10-6	FOR WORK AREA
301	350		19	72+60 ± RT.	FEE	254	THE TRUSTEES AND INHABITANTS OF DISTRICTS NO. 1 & 4	8940	8686	78	495	93.09-1-33	
302	351		20	73+27 ± RT.	FEE	604	JAMES A. GUIDA	48627	48023	9996	300	93.09-1-4	
303	352		21	85+44 ± RT.	PE	426	SPEEDWAY LLC	18693	18267	11338	2796	93.01-1-17	FOR HIGHWAY PURPOSES
304	353		22	G 30+95 ± LT.	FEE	807	GENESEE TRANSIT HOLDINGD VII, LLC	42473	41666	11139	9394	93.01-1-6.11	
305	354		23	90+09 ± RT.	FEE	926	CIPA CORP.	11562	10636	7216	449	93.05-1-23	
306	355		12	100+42 ± LT.	P.E.	4388	NEW YORK STATE ELECTRIC & GAS CORPORATION	61305	56917	6423	121	82.03-4-13	FOR SNOW FENCE AND PLANTINGS FOR PASSIVE SNOW CONTROL
307	356		13	101+39 ± RT.	P.E.	30806	PAUL PFOHL	555766	524960	10929	1415	82.03-4-8	FOR SNOW FENCE AND PLANTINGS FOR PASSIVE SNOW CONTROL
308	357		14	107+57 ± LT.	P.E.	13400	PAUL PFOHL	158625	145225	10929	1415	82.03-4-7	FOR SNOW FENCE AND PLANTINGS FOR PASSIVE SNOW CONTROL
309	358		15	111+92 ± LT.	P.E.	15686	PAUL PFOHL	408460	392774	10929	1415	82.03-4-5	FOR SNOW FENCE AND PLANTINGS FOR PASSIVE SNOW CONTROL
310	359		24	57+96 ± RT.	FEE	13	95 NYRPT LLC	27598	27585	11272	346	93.13-3-5	
311-T	360		1	120+78 ± LT.	C.U.& O.	8389	THE PEOPLE OF THE STATE OF NEW YORK THRUWAY AUTHORITY	-	-	M.844,M845	P.845	NONE	EXPANSION OF MAP 187-T PARCEL 210
312	363		25	55+64 ± LT.	T.E.	41	B.K.V. REALITY CO., LLC	172715	172674	11098	4702	93.13-4-30	FOR SIGN REMOVAL
313	364		26	54+12 ± RT.	T.E.	84	KHALID J. QAZI, M.D.	25186	25102	9663	566	93.13-3-9.1	FOR SIGN REMOVAL
314	365		27	54+91 ± RT.	T.E.	84	VINCENT FIORELLA	22377	22293	11307	5241	93.13-3-8	FOR SIGN REMOVAL
315	366		28	55+64 ± LT.	T.E.	42	R.M.F. HOLDING CORPORATION	30340	30298	7855	177	93.13-10-4.1	FOR SIGN REMOVAL
316	367		29	57+06 ± LT.	T.E.	110	DBDM PROPERTIES,LLC	57713	57603	11331	1791	93.13-10-2.11	FOR SIGN REMOVAL

TABLE OF TEMPORARY AND PERMANENT PAVEMENT MARKINGS

TABLE 5

ROADWAY MARKINGS	LOCATION	LENGTH	"L" FACTOR	619.0901 (LF)	685.11 (LF)	685.11120009 (LF)	685.12 (LF)	685.13 (EA)	685.14 (EA)	640.10 (LF)	640.11 (LF)	REMARKS
LETTERS - ONLY	100+61							8				NB
LETTERS - ONLY	102+14							8				NB
LETTERS - ONLY	103+66							8				NB
LETTERS - ONLY	FE 8+91							4				EB
LETTERS - ONLY	FE 11+13							4				WB
LETTERS - ONLY	G 282+23							8				EB
LETTERS - ONLY	G 282+98							8				EB
LETTERS - ONLY	G 283+99							8				EB
LETTERS - ONLY	G 286+38							8				WB
LETTERS - ONLY	G 287+47							8				WB
LETTERS - ONLY	G 288+53							8				WB
SYMBOL - RIGHT TURN ARROW	TOTAL								20			SB, NB
SYMBOL - LEFT TURN ARROW	TOTAL								112			LEFT TURN ONLY + TWLT
SYMBOL - STRAIGHT ARROW	TOTAL								1			
SYMBOL - RIGHT/LEFT TURN WITH STRAIGHT ARROW	TOTAL								3			LEFT/RIGHT WITH STRAIGHT
			(TABLE 1) SUBTOTAL:	53,924	8,061	0	45,863	0	0	8,061	45,863	
			(TABLE 2) SUBTOTAL:	11,359	11,359	0	0	0	0	11,359	0	
			(TABLE 3) SUBTOTAL:	8,858	8,858	22,236	0	0	0	8,858	0	
			(TABLE 4) SUBTOTAL:	3,040	0	15,659	3,040	56	0	0	3,040	
			(TABLE 5) SUBTOTAL:	0	0	0	0	80	136	0	0	
			(TABLES 1-5) TOTAL:	77,181	28,277	37,895	48,903	136	136	28,277	48,903	

ITEM SUMMARY:

ITEM 619.0901 - TEMPORARY PAVEMENT MARKINGS STRIPES (TRAFFIC PAINT) - (LF)
ITEM 640.10 - WHITE PAINT REFLECTORIZED PVMT. STRIPES - 15 MILS - (LF)
ITEM 640.11 - YELLOW PAINT REFLECTORIZED PVMT. STRIPES - 15 MILS - (LF)
ITEM 685.11 - WHITE EPOXY REFLECTORIZED PAVEMENT STRIPES - 20 MILS - (LF)
ITEM 685.11120009 - EPOXY REFLECTORIZED PAVEMENT STRIPES - 20 MILS - HAND WORK - (LF)
ITEM 685.12 - YELLOW EPOXY REFLECTORIZED PAVEMENT STRIPES - 20 MILS - (LF)
ITEM 685.13 - WHITE EPOXY REFLECTORIZED PAVEMENT LETTERS - 20 MILS - (EA)
ITEM 685.14 - WHITE EPOXY REFLECTORIZED PAVEMENT SYMBOLS - 20 MILS - (EA)

TEMPORARY & FINAL PAVEMENT MARKINGS - END
(SEE DWGS. MST-9 THRU MST-12 FOR TABLES 1-4)

AFFIX SEAL:
ON:

ALTERED BY:
ON:

D264571
STATE OF NEW YORK
ROBERT F. SCHALLER
NO. 082465
LICENSED PROFESSIONAL ENGINEER

AS-BUILT REVISIONS
DESCRIPTION OF ALTERATIONS:

NY 78, TRANSIT ROAD, S.H. 1334A-1
FRENCH ROAD TO WEHRLE DRIVE
TOWNS OF CHEEKTOWAGA & LANCASTER
VILLAGE OF DEPEW
COUNTY: ERIE REGION: 05

PIN 5813.61
NY 78
UTILITY QUALITY LEVEL D

BRIDGES

CULVERTS

ALL DIMENSIONS IN ft UNLESS OTHERWISE NOTED

MISCELLANEOUS TABLES - SHEET 13

CONTRACT NUMBER
D264571

DRAWING NO. MST-13
SHEET NO. 89

IT IS A VIOLATION OF LAW FOR ANY PERSON, UNLESS THEY ARE ACTING UNDER THE DIRECTION OF A LICENSED PROFESSIONAL ENGINEER, ARCHITECT, LANDSCAPE ARCHITECT, OR LAND SURVEYOR, TO ALTER AN ITEM IN ANY WAY. IF AN ITEM BEARING THE STAMP OF A LICENSED PROFESSIONAL IS ALTERED, THE ALTERING ENGINEER, ARCHITECT, LANDSCAPE ARCHITECT, OR LAND SURVEYOR SHALL STAMP THE DOCUMENT AND INCLUDE THE NOTATION "ALTERED BY" FOLLOWED BY THEIR SIGNATURE, THE DATE OF SUCH ALTERATION, AND A SPECIFIC DESCRIPTION OF THE ALTERATION.

NEW YORK STATE OF OPPORTUNITY. Department of Transportation

DESIGN SUPERVISOR S. S. VAIDYA
JOB MANAGER R. F. SCHALLER
DESIGN C. L. CRITES
CHECK R. F. SCHALLER
DRAFTING C. L. CRITES
CHECK R. F. SCHALLER
PROJECT MANAGER S. S. VAIDYA
FILE NAME = 581361_CPH_HWY_MST-13.dgn
DATE/TIME = 22-JUN-2021 12:39
USER = crites

UTILITY POLE TABLE

OWNER	POLE NO.	STATION/OFFSET	DISPOSITION	COMMENTS
NYSEG	NO *	CL 31+43.41 O/S = 71.22' LT	TO REMAIN	---
NYSEG	NYSEG/217/ 276/VZ	CL 31+50.73 O/S = 160.86' RT	TO REMAIN	-----
NYSEG	NYSEG/ 276-1	CL 31+83.30 O/S = 160.86' RT	TO REMAIN	---
NYSEG	VZ/ 2574	CL 31+80.71 O/S = 174.60' RT	TO REMAIN	------
NYSEG	VZ 101	CL 32+93.79 O/S = 94.82' LT	TO REMAIN	---
NYSEG	NYSEG/265/ AI/VZ/2575	CL 33+44.45 O/S = 66.15' RT	TO REMAIN	-----
NYSEG	NO *	CL 33+43.35 O/S = 72.32' RT	TO REMAIN	---
NYSEG	NO *	CL 34+29.59 O/S = 156.23' RT	TO REMAIN	-----
NYSEG	NO *	CL 34+36.19 O/S = 64.38' RT	TO REMAIN	---
NYSEG	NO *	CL 34+83.83 O/S = 61.78' RT	TO REMAIN	---
NYSEG	NO *	CL 34+84.55 O/S = 72.72' LT	TO REMAIN	---
NYSEG	NO *	CL 34+99.20 O/S = 63.30' RT	TO REMAIN	---
NYSEG	NO *	CL 36+09.08 O/S = 61.22' RT	TO REMAIN	---
NYSEG	NO *	CL 37+83.49 O/S = 62.07' RT	TO REMAIN	---
NYSEG	NO *	CL 38+33.61 O/S = 75.99' LT	TO REMAIN	---
NYSEG	NO *	CL 38+39.60 O/S = 109.05' LT	TO REMAIN	---
NYSEG	NO *	CL 38+96.06 O/S = 72.76' LT	TO REMAIN	---
NYSEG	NO *	CL 39+16.85 O/S = 58.75' RT	TO REMAIN	---
NYSEG	NO *	CL 40+29.16 O/S = 60.23' RT	TO REMAIN	---
NYSEG	NO *	CL 40+61.24 O/S = 59.40' RT	TO REMAIN	---
NYSEG	NO *	CL 42+06.01 O/S = 59.00' RT	TO REMAIN	---

CONTINUES AT THE TOP OF THE NEXT TABLE

UTILITY POLE TABLE (CONTINUED)

OWNER	POLE NO.	STATION/OFFSET	DISPOSITION	COMMENTS
NYSEG	NO *	CL 42+36.35 O/S = 36.35' LT	TO REMAIN	---
NYSEG	NO *	CL 42+52.31 O/S = 52.31' LT	TO REMAIN	---
NYSEG	NO *	CL 43+82.43 O/S = 55.07' RT	TO REMAIN	---
NYSEG	NO *	CL 45+06.68 O/S = 54.94' RT	TO REMAIN	---
NYSEG	NO *	CL 46+21.18 O/S = 61.64' LT	TO REMAIN	---
NYSEG	NYSEG/217/ 265/VZ/33	CL 46+29.99 O/S = 57.32' RT	TO REMAIN	---
NYSEG	NYSEG/217/ 265/VZ/34	CL 47+31.41 O/S = 59.96' RT	TO REMAIN	---
NYSEG	NO *	CL 48+80.34 O/S = 62.30' RT	TO REMAIN	---
NYSEG	NO *	CL 48+81.36 O/S = 67.29' LT	TO REMAIN	---
NYSEG	NO *	CL 50+09.30 O/S = 61.13' RT	TO REMAIN	---
NYSEG	NO *	CL 50+65.46 O/S = 60.86' RT	TO REMAIN	-----
NYSEG	NO *	CL 50+98.03 O/S = 92.61' LT	TO REMAIN	------
NYSEG	NO *	CL 51+09.88 O/S = 61.67' RT	TO REMAIN	---
NYSEG	NO *	CL 51+55.21 O/S = 60.33' RT	TO REMAIN	------
NYSEG	NO *	CL 51+91.68 O/S = 60.20' RT	TO REMAIN	------
NYSEG	NO *	CL 52+29.34 O/S = 60.08' RT	TO REMAIN	---
NYSEG	NO *	CL 52+35.73 O/S = 67.77' LT	TO REMAIN	---
NYSEG	NO *	CL 52+67.76 O/S = 69.98' RT	TO REMAIN	---
NYSEG	NO *	CL 52+85.50 O/S = 52.60' RT	TO REMAIN	------
NYSEG	NO *	CL 54+03.10 O/S = 51.35' RT	TO REMAIN	---
NYSEG	NO *	CL 54+09.44 O/S = 73.25' LT	TO REMAIN	---
NYSEG	NO *	CL 54+64.24 O/S = 64.45' RT	TO REMAIN	---
NYSEG	NO *	CL 55+09.82 O/S = 51.16' RT	TO REMAIN	-------

CONTINUES AT THE TOP OF THE NEXT TABLE

UTILITY POLE TABLE (CONTINUED)

OWNER	POLE NO.	STATION/OFFSET	DISPOSITION	COMMENTS
NYSEG	NO *	CL 55+16.19 O/S = 62.45' LT	TO REMAIN	------
NYSEG	NO *	CL 57+17.09 O/S = 51.64' RT	TO REMAIN	---------
NYSEG	NYSEG/1	CL 57+78.17 O/S = 58.84' LT	TO REMAIN	-------
NYSEG	NO *	CL 58+07.60 O/S = 53.35' RT	TO REMAIN	----------
NYSEG	NO *	CL 60+44.06 O/S = 61.80' RT	TO REMAIN	----
NYSEG	NO *	CL 60+50.84 O/S = 72.85' LT	TO REMAIN	----------
NYSEG	NO *	CL 60+79.07 O/S = 65.08' LT	TO REMAIN	---
NYSEG	NYSEG/ 217/246/ VZ/44	CL 62+20.10 O/S = 64.02' RT	TO REMAIN	----------
NYSEG	NO *	CL 63+49.92 O/S = 64.25' RT	TO REMAIN	---
NYSEG	NO *	CL 63+79.32 O/S = 69.24' LT	TO REMAIN	---
NYSEG	NYSEG/217/ 244	CL 64+61.16 O/S = 65.38' RT	TO REMAIN	---
NYSEG	NO *	CL 65+38.74 O/S = 97.50' RT	TO REMAIN	---
NYSEG	NO *	CL 65+57.38 O/S = 62.68' LT	TO REMAIN	---
NYSEG	NYSEG/ 2436	CL 67+24.35 O/S = 63.19' LT	TO REMAIN	---
NYSEG	NYSEG/217/ 243/VZ/47	CL 67+36.46 O/S = 65.65' RT	TO REMAIN	---
NYSEG	NYSEG/242/ VZ/48	CL 68+75.79 O/S = 64.95' RT	TO REMAIN	---
NYSEG	NO *	CL 68+92.29 O/S = 63.18' LT	TO REMAIN	---
NYSEG	NYSEG/217/ 241/VZ/ 49	CL 70+46.58 O/S = 64.81' RT	TO REMAIN	---
NYSEG	NO *	CL 70+46.59 O/S = 52.62' RT	TO REMAIN	---
NYSEG	NO *	CL 72+48.22 O/S = 65.66' LT	TO REMAIN	---
NYSEG	NYSEG/217/ 240/VZ/ 50	CL 72+49.43 O/S = 64.58' RT	TO REMAIN	---
NYSEG	NYSEG/ 239	CL 74+14.65 O/S = 47.30' RT	RELOCATE	CONFLICT IS ANTICIPATED TO BE ADDRESSED PRIOR TO COMMENCMENT OF CONSTRUCTION
NYSEG	NYSEG/ 1908	CL 74+56.56 O/S = 112.81' RT	TO REMAIN	---

NOTES:

1. STABILIZATION OF UTILITY POLES IS REQUIRED WHERE ANY EXCAVATION 2' OR DEEPER FALLS WITHIN 5' OF THE POLE.
2. REFER TO NOTE 3 ON DWG GNN-1 UNDER UTILITY NOTES.
3. BUCK ARMS TO BE INSTALLED TO RELOCATED UP'S. LUMINAIRES WILL NEED TO BE ADJUSTED TO MAINTAIN ADEQUATE LIGHTING. ALL CURRENT UTILITIES ON POLES WILL BE EFFECTED.
4. IN ADDITION TO NYSEG FACILITIES, THE FOLLOWING UTILITIES HAVE FACILITIES WHICH NEED TO BE RELOCATED WHEN THE POLES ARE MOVED TO THEIR PROPOSED LOCATIONS:

   VILLAGE OF DEPEW FIRE DEPARTMENT
   VILLAGE OF DEPEW STREET LIGHTING
   VERIZON
   TIME WARNER
5. VERIZON & LIGHTOWER OVERHEAD LINES SHALL BE PROTECTED DURING THE REMOVAL ON B.I.N. 7-03022-0
6. WHEN WORKING WITHIN 5' OF UTILITY POLES, REFER TO NOTE 1 ON DWG. WLD-1 FOR STABILIZATION REQUIREMENTS.

AFFIX SEAL:
ON:

ALTERED BY:
ON:

D264571
STATE OF NEW YORK
ROBERT F. SCHALLER
LICENSED PROFESSIONAL ENGINEER
NO. 082465

AS-BUILT REVISIONS
DESCRIPTION OF ALTERATIONS:

NY 78, TRANSIT ROAD, S.H. 1334A-1
FRENCH ROAD TO WEHRLE DRIVE
TOWNS OF CHEEKTOWAGA & LANCASTER
VILLAGE OF DEPEW
COUNTY: ERIE REGION: 05

PIN 5813.61
NY 78
UTILITY QUALITY LEVEL D

BRIDGES

CULVERTS

ALL DIMENSIONS IN ft UNLESS OTHERWISE NOTED

MISCELLANEOUS TABLES - SHEET 14
UTILITY POLES

CONTRACT NUMBER
D264571

DRAWING NO. MST-14
SHEET NO. 90

IT IS A VIOLATION OF LAW FOR ANY PERSON, UNLESS THEY ARE ACTING UNDER THE DIRECTION OF A LICENSED PROFESSIONAL ENGINEER, ARCHITECT, LANDSCAPE ARCHITECT, OR LAND SURVEYOR, TO ALTER AN ITEM IN ANY WAY. IF AN ITEM BEARING THE STAMP OF A LICENSED PROFESSIONAL IS ALTERED, THE ALTERING ENGINEER, ARCHITECT, LANDSCAPE ARCHITECT, OR LAND SURVEYOR SHALL STAMP THE DOCUMENT AND INCLUDE THE NOTATION "ALTERED BY" FOLLOWED BY THEIR SIGNATURE, THE DATE OF SUCH ALTERATION, AND A SPECIFIC DESCRIPTION OF THE ALTERATION.

NEW YORK STATE OF OPPORTUNITY. Department of Transportation

DESIGN SUPERVISOR S. S. VAIDYA
JOB MANAGER R. F. SCHALLER
DESIGN V. M. DINATALE
CHECK R. F. SCHALLER
DRAFTING V. M. DINATALE
CHECK R. F. SCHALLER
PROJECT MANAGER S. S. VAIDYA

FILE NAME = 581361_CPH_HWY_MST-14.dgn
DATE/TIME = 22-JUN-2021 12:39
USER = ccrites

UTILITY POLE TABLE

OWNER	POLE NO.	STATION/OFFSET	DISPOSITION	COMMENTS
NYSEG	NO *	CL 75+04.45 O/S = 78.55' LT	TO REMAIN	---
NYSEG	NYSEG/18	CL 75+27.08 O/S = 97.47' RT	TO REMAIN	---
NYSEG	NYSEG/ 217/238	CL 75+53.11 O/S = 46.63' RT	RELOCATE	CONFLICT IS ANTICIPATED TO BE ADDRESSED PRIOR TO COMMENCMENT OF CONSTRUCTION
NYSEG	NO *	CL 75+56.62 O/S = 77.45' LT	TO REMAIN	---
NYSEG	NO *	CL 76+80.70 O/S = 77.00' LT	TO REMAIN	---
NYSEG	NYSEG/217/ 237	CL 77+21.99 O/S = 56.93' RT	TO REMAIN	---
NYSEG	NO *	CL 78+04.24 O/S = 80.83' LT	TO REMAIN	---
NYSEG	NYT/54	CL 79+00.03 O/S = 68.37' RT	TO REMAIN	---
NYSEG	NO *	CL 79+30.22 O/S = 70.83' LT	TO REMAIN	---
NYSEG	NYSEG/225	CL 80+02.42 O/S = 79.56' LT	TO REMAIN	---
NYSEG	NO *	CL 80+74.15 O/S = 79.33' RT	TO REMAIN	---
NYSEG	NO *	CL 81+62.22 O/S = 83.35' LT	TO REMAIN	---
NYSEG	NO *	CL 82+51.25 O/S = 89.80' RT	TO REMAIN	---
NYSEG	NO *	CL 83+32.69 O/S = 60.80' RT	TO REMAIN	---
NYSEG	NO *	CL 83+42.33 O/S = 82.13' LT	TO REMAIN	---
NYSEG	NO *	CL 84+26.53 O/S = 99.80' RT	TO REMAIN	---
NYSEG	NO *	CL 84+60.62 O/S = 70.36' LT	TO REMAIN	---
NYSEG	NYT/58	CL 84+96.14 O/S = 84.10' LT	TO REMAIN	---
NYSEG	NO *	CL 85+98.33 O/S = 112.01' RT	TO REMAIN	---
NYSEG	NYSEG/ 231-1	CL 87+20.22 O/S = 60.10' LT	TO REMAIN	---
NYSEG	NO *	CL 87+74.58 O/S = 82.37' LT	TO REMAIN	---

CONTINUES AT THE TOP OF THE NEXT TABLE

UTILITY POLE TABLE (CONTINUED)

OWNER	POLE NO.	STATION/OFFSET	DISPOSITION	COMMENTS
NYSEG	NYSEG/231	CL 87+81.93 O/S = 110.78' RT	TO REMAIN	---
NYSEG	NO *	CL 89+45.57 O/S = 96.97' RT	TO REMAIN	---
NYSEG	NO *	CL 89+83.64 O/S = 85.41' LT	TO REMAIN	---
NYSEG	22-1	CL 90+98.06 O/S = 61.57' RT	TO REMAIN	---
NYSEG	61	CL 91+07.27 O/S = 84.22' RT	TO REMAIN	---
NYSEG	NYSEG/217/ 229	CL 91+09.55 O/S = 83.32' RT	TO REMAIN	---
NYSEG	NO *	CL 91+30.51 O/S = 86.01' LT	TO REMAIN	---
NYSEG	NO *	CL 92+56.92 O/S = 93.01' LT	TO REMAIN	---
NYSEG	NYSEG/217/ 228/VZ/62	CL 92+81.59 O/S = 66.09' RT	TO REMAIN	---
NYSEG	NO *	CL 93+80.47 O/S = 66.48' LT	GUY WIRE RELOCATION	CONFLICT IS ANTICIPATED TO BE ADDRESSED PRIOR TO COMMENCMENT OF CONSTRUCTION
NYSEG	NYSEG/227/ NYT/63-1	CL 94+61.06 O/S = 55.42' RT	GUY WIRE RELOCATION	CONFLICT IS ANTICIPATED TO BE ADDRESSED PRIOR TO COMMENCMENT OF CONSTRUCTION
NYSEG	NYSEG/217/ 227-6/NYT/ 63-1S	CL 94+95.84 O/S = 120.55' RT	TO REMAIN	---
NYSEG	NYSEG/226/ NYT/64	CL 95+85.19 O/S = 47.51 LT	TO REMAIN	---
NYSEG	NYSEG/225/ NYT/65	CL 97+86.11 O/S = 47.79' LT	TO REMAIN	---
NYSEG	NO *	CL 97+88.10 O/S = 61.62' RT	TO REMAIN	---
NYSEG	NO *	CL 98+47.95 O/S = 72.63' RT	TO REMAIN	---
NYSEG	NYSEG/224	CL 98+48.32 O/S = 46.43' LT	TO REMAIN	---
NYSEG	NYSEG/299	CL 98+77.61 O/S = 63.22' LT	TO REMAIN	---
NYSEG	NO *	CL 99+17.28 O/S = 89.04' RT	TO REMAIN	---
NYSEG	NYSEG/298	CL 99+30.57 O/S = 69.18' RT	RELOCATE	CONFLICT IS ANTICIPATED TO BE ADDRESSED PRIOR TO COMMENCMENT OF CONSTRUCTION
NYSEG	NYSEG/223/ NYT/67	CL 100+15.93 O/S = 42.35' LT	TO REMAIN	---
NYSEG	NO *	CL 101+10.63 O/S = 39.79' RT	STABILIZE & RELOCATE	NYSEG SHALL STABILIZE POLE DURING 24" WL INSTALLATION THEN RELOCATE DURING WIDENING AFTER WL INSTALLED
NYSEG	NYSEG/217/ 222/NYT/8	CL 101+42.11 O/S = 42.29' LT	TO REMAIN	---

CONTINUES AT THE TOP OF NEXT TABLE

UTILITY POLE TABLE (CONTINUED)

OWNER	POLE NO.	STATION/OFFSET	DISPOSITION	COMMENTS
NYSEG	NO *	CL 101+91.18 O/S = 51.76' RT	TO REMAIN	---
NYSEG	NYT/69-3	CL 102+24.70 O/S = 58.16' RT	TO REMAIN	---
NYSEG	NYSEG/ 221-1/ NYT/69-1	CL 102+24.33 O/S = 69.76' LT	TO REMAIN	---
NYSEG	NYSEG/217/ 221-2	CL 102+25.56 O/S = 53.14' LT	TO REMAIN	---
NYSEG	NO *	CL 102+25.77 O/S = 98.49' LT	TO REMAIN	----
NYSEG	NYSEG/217/ 221	CL 102+48.02 O/S = 42.63' LT	TO REMAIN	---
NYSEG	NYSEG/220/ NYT/70	CL 103+38.48 O/S = 42.81' LT	TO REMAIN	---
NYSEG	NO *	CL 104+08.60 O/S = 63.46' RT	TO REMAIN	---
NYSEG	X/NYSEG/ 220-6	CL 103+45.42 O/S = 44.06' RT	RELOCATE	CONFLICT IS ANTICIPATED TO BE ADDRESSED PRIOR TO COMMENCMENT OF CONSTRUCTION
NYSEG	NYSEG/217/ 219/NYT/71	CL 104+62.90 O/S = 42.56' LT	TO REMAIN	---
NYSEG	NYSEG/218/ NYT/72	CL 105+91.61 O/S = 42.76' LT	TO REMAIN	---
NYSEG	NYSEG/ 218-1	CL 105+99.15 O/S = 39.26' RT	TO REMAIN	---
NYSEG	NYSEG/217/ 217A	CL 106+52.00 O/S = 42.78' LT	TO REMAIN	---
NYSEG	NYSEG/217 NYT/BELL/ ATL/73-1	CL 106+76.80 O/S = 81.79' RT	TO REMAIN	---
NYSEG	NYSEG/217/ NYT/BELL/ ATL/ 73	CL 107+22.37 O/S = 41.89' LT	GUY WIRE CLEARANCE	CONFLICT IS ANTICIPATED TO BE ADDRESSED PRIOR TO COMMENCMENT OF CONSTRUCTION
NYSEG	NYSEG/216A/ BELL/ATL/ 73-5	CL 108+12.44 O/S = 41.45' LT	TO REMAIN	---
NYSEG	NYSEG/216/ NYT/BELL/ ATL/74	CL 108+59.91 O/S = 42.05' LT	TO REMAIN	---
NYSEG	NYSEG/ 216-1	CL 108+64.27 O/S = 37.31' RT	TO REMAIN	---
NYSEG	NYSEG/217/ 215	CL 109+85.18 O/S = 41.99' LT	TO REMAIN	---
NYSEG	NYSEG/3779/ 1/NYT/ 76-1	CL 110+56.12 O/S = 51.77' RT	GUY WIRE CLEARANCE	CONFLICT IS ANTICIPATED TO BE ADDRESSED PRIOR TO COMMENCMENT OF CONSTRUCTION
NYSEG	VZ/76	CL 111+07.25 O/S = 41.82' LT	TO REMAIN	---
NYSEG	X/NYSEG/ 214-1	CL 111+12.05 O/S = 45.26' RT	TO REMAIN	---
NYSEG	NO *	CL 112+66.45 O/S = 117.49' RT	TO REMAIN	---

CONTINUES AT THE TOP OF DWG NO. MST-X3

AFFIX SEAL:
ON:

ALTERED BY:
ON:

D264571

STATE OF NEW YORK · ROBERT F. SCHALLER · LICENSED PROFESSIONAL ENGINEER · NO. 082465

AS-BUILT REVISIONS
DESCRIPTION OF ALTERATIONS:

NY 78, TRANSIT ROAD, S.H. 1334A-1
FRENCH ROAD TO WEHRLE DRIVE
TOWNS OF CHEEKTOWAGA & LANCASTER
VILLAGE OF DEPEW
COUNTY: ERIE REGION: 05

PIN 5813.61
NY 78
UTILITY QUALITY LEVEL D

BRIDGES

CULVERTS

ALL DIMENSIONS IN ft UNLESS OTHERWISE NOTED

MISCELLANEOUS TABLES - SHEET 15
UTILITY POLES

CONTRACT NUMBER
D264571

DRAWING NO. MST-15
SHEET NO. 91

IT IS A VIOLATION OF LAW FOR ANY PERSON, UNLESS THEY ARE ACTING UNDER THE DIRECTION OF A LICENSED PROFESSIONAL ENGINEER, ARCHITECT, LANDSCAPE ARCHITECT, OR LAND SURVEYOR, TO ALTER AN ITEM IN ANY WAY. IF AN ITEM BEARING THE STAMP OF A LICENSED PROFESSIONAL IS ALTERED, THE ALTERING ENGINEER, ARCHITECT, LANDSCAPE ARCHITECT, OR LAND SURVEYOR SHALL STAMP THE DOCUMENT AND INCLUDE THE NOTATION "ALTERED BY" FOLLOWED BY THEIR SIGNATURE, THE DATE OF SUCH ALTERATION, AND A SPECIFIC DESCRIPTION OF THE ALTERATION.

NEW YORK STATE OF OPPORTUNITY. Department of Transportation

DESIGN SUPERVISOR S. S. VAIDYA JOB MANAGER R. F. SCHALLER DESIGN V. M. DINATALE CHECK R. F. SCHALLER DRAFTING V. M. DINATALE CHECK R. F. SCHALLER PROJECT MANAGER S. S. VAIDYA

FILE NAME = 581361_CPH_HWY_MST-15.dgn
DATE/TIME = 22-JUN-2021 12:39
USER = ccrites

UTILITY POLE TABLE

OWNER	POLE NO.	STATION/OFFSET	DISPOSITION	COMMENTS
NYSEG	NYSEG/213	CL 112+70.85 O/S = 43.02' LT	GUY WIRE CLEARANCE	CONFLICT IS ANTICIPATED TO BE ADDRESSED PRIOR TO COMMENCMENT OF CONSTRUCTION
NYSEG	NYSEG/X-1	CL 113+11.45 O/S = 43.49' RT	TO REMAIN	---
NYSEG	NO *	CL 113+28.25 O/S = 52.33' RT	TO REMAIN	---
NYSEG	NYT/79	CL 113+49.70 O/S = 91.39' LT	TO REMAIN	---
NYSEG	NO *	CL 113+85.18 O/S = 53.19' RT	TO REMAIN	---
NYSEG	NYSEG/217/ 212/NYT/48	CL 113+97.87 O/S = 43.11' LT	TO REMAIN	---
NYSEG	NYSEG/1-2	CL 114+23.65 O/S = 46.38' RT	TO REMAIN	---
NYSEG	NYSEG/217/ 211/NYT/47	CL 115+38.94 O/S = 42.20' LT	TO REMAIN	---
NYSEG	NYSEG/X/ 11-1	CL 115+56.79 O/S = 38.78' RT	TO REMAIN	---
NYSEG	209/H/ NYT/46	CL 116+99.15 O/S = 42.49' LT	TO REMAIN	---
NYSEG	NYSEG/217/ 208/NYT/45	CL 118+57.54 O/S = 42.54' LT	TO REMAIN	---
NYSEG	NYSEG/ 208-1	CL 118+68.16 O/S = 38.99' RT	TO REMAIN	---
NYSEG	NYSEG/207/ NYT/44	CL 120+19.18 O/S = 41.95 LT	TO REMAIN	---
NYSEG	206/NYT/43	CL 121+37.09 O/S = 79.54' RT	GUY WIRE CLEARANCE	CONFLICT IS ANTICIPATED TO BE ADDRESSED PRIOR TO COMMENCMENT OF CONSTRUCTION
NYSEG	NO *	CL 121+72.99 O/S = 41.61' LT	TO REMAIN	---
NYSEG	X/NYSEG/ 206-1	CL 121+81.99 O/S = 40.50' RT	TO REMAIN	---
NYSEG	NO *	CL 123+21.93 O/S = 41.05' RT	GUY WIRE CLEARANCE	CONFLICT IS ANTICIPATED TO BE ADDRESSED PRIOR TO COMMENCMENT OF CONSTRUCTION
NYSEG	NO *	CL 123+53.22 O/S = 43.43' LT	TO REMAIN	---
NYSEG	NYSEG/3879/ BELL/ATL/1	CL 123+72.99 O/S = 68.13' LT	TO REMAIN	---
NYSEG	NYSEG/ 231-1	CL 123+73.41 O/S = 99.16' LT	TO REMAIN	---
NYSEG	NYSEG/217/ 204	CL 124+41.56 O/S = 42.82' LT	TO REMAIN	---

CONTINUES AT THE TOP OF THE NEXT TABLE

UTILITY POLE TABLE (CONTINUED)

OWNER	POLE NO.	STATION/OFFSET	DISPOSITION	COMMENTS
NYSEG	NYSEG/ 204-1	CL 124+52.01 O/S = 40.53' RT	TO REMAIN	---
NYSEG	NYSEG/217/ 203	CL 125+74.66 O/S = 42.17' LT	TO REMAIN	---
NYSEG	NYSEG/217/ 205-X3	CL 126+13.21 O/S = 41.68' RT	TO REMAIN	---
NYSEG	515X5/ NYSEG/217/ 202	CL 126+89.63 O/S = 43.30' LT	TO REMAIN	---
NYSEG	X/202-1	CL 126+93.28 O/S = 42.45' RT	TO REMAIN	---
NYSEG	217/ 201	CL 128+27.85 O/S = 42.94' LT	RELOCATE	CONFLICT IS ANTICIPATED TO BE ADDRESSED PRIOR TO COMMENCMENT OF CONSTRUCTION
NYSEG	NYSEG/ 201-1/ NYT/38-1	CL 128+68.43 O/S = 72.50' RT	TO REMAIN	---
NYSEG	NYSEG/ 200-1	CL 129+78.47 O/S = 36.95' RT	TO REMAIN	---
NYSEG	NYSEG/200/ NYT/37	CL 130+06.55 O/S = 41.52' LT	GUY WIRE CLEARANCE	CONFLICT IS ANTICIPATED TO BE ADDRESSED PRIOR TO COMMENCMENT OF CONSTRUCTION
NYSEG	NYSEG/217/ 200-1/ NYT/36	CL 130+51.25 O/S = 52.54' RT	TO REMAIN	---
NYSEG	217/198	CL 130+96.38 O/S = 42.02' LT	TO REMAIN	---
NYSEG	NO *	CL 131+63.67 O/S = 54.99' RT	TO REMAIN	---
NYSEG	NYSEG/ 198-1	CL 132+29.73 O/S = 43.60' RT	TO REMAIN	---
NYSEG	NYSEG/217/ 198	CL 132+64.61 O/S = 57.58' LT	TO REMAIN	---
NYSEG	NYSEG/197/ NYT/34	CL 133+92.62 O/S = 42.94' LT	TO REMAIN	---
NYSEG	NYSEG/217/ 196/NYT/33	CL 135+11.27 O/S = 44.77' LT	TO REMAIN	---
NYSEG	NO *	CL 136+17.28 O/S = 92.67' RT	TO REMAIN	---
NYSEG	NO *	CL 136+20.87 O/S = 68.23' LT	TO REMAIN	---
NYSEG	NYSEG/217/ 195/NYT/32	CL 136+61.69 O/S = 44.37' LT	TO REMAIN	---
NYSEG	NO *	CL 136+63.03 O/S = 113.05' LT	TO REMAIN	---
NYSEG	NO *	CL 136+85.68 O/S = 55.85' RT	TO REMAIN	---
NYSEG	NYSEG/217/ 194/NYT/31	CL 137+91.00 O/S = 42.64' LT	TO REMAIN	---
NYSEG	NYSEG/217/ 193/NYT/30	CL 139.21.84 O/S = 43.23' LT	TO REMAIN	---

CONTINUES AT THE TOP OF NEXT TABLE

UTILITY POLE TABLE (CONTINUED)

OWNER	POLE NO.	STATION/OFFSET	DISPOSITION	COMMENTS
NYSEG	NYSEG/192/ NYT/29	CL 140+56.31 O/S = 42.69' LT	TO REMAIN	---
NYSEG	NYSEG/217/ NYT/28	CL 142+02.49 O/S = 43.03' LT	TO REMAIN	---
NYSEG	NYSEG/190/ NYT/27	CL 143+51.59 O/S = 43.52' LT	TO REMAIN	---
NYSEG	NO *	CL 143+67.38 O/S = 135.75' LT	TO REMAIN	---
NYSEG	NYSEG/217/ 189/15X	CL 144+69.26 O/S = 43.23' LT	TO REMAIN	---
NYSEG	NYSEG/217/ 188/NYT/25	CL 145+36.67 O/S = 44.12' LT	TO REMAIN	---
NYSEG	2213/ 1A-2	CL 145+99.58 O/S = 49.38' RT	TO REMAIN	---
NYSEG	NO *	CL 146+72.16 O/S = 44.23' RT	TO REMAIN	---
NYSEG	NO *	CL 146+70.69 O/S = 68.42' RT	TO REMAIN	---
NYSEG	NO *	CL 146+70.69 O/S = 82.44' RT	TO REMAIN	---
NYSEG	NYSEG/217/ 182/NYT/24/ 87	CL 146+73.02 O/S = 43.07' LT	TO REMAIN	---
NYSEG	NYSEG/ 186/NYT/23	CL 148+21.24 O/S = 44.25' LT	RELOCATE	CONFLICT IS ANTICIPATED TO BE ADDRESSED PRIOR TO COMMENCMENT OF CONSTRUCTION
NYSEG	NYSEG/185/ VZ/22	CL 149+59.66 O/S = 43.23' LT	TO REMAIN	---
NYSEG	NO *	CL 149+62.83 O/S = 75.82' RT	TO REMAIN	---
NYSEG	NYSEG/184/ NYT/21	CL 151+24.95 O/S = 42.88' LT	RELOCATE	CONFLICT IS ANTICIPATED TO BE ADDRESSED PRIOR TO COMMENCMENT OF CONSTRUCTION
NYSEG	NYSEG/183/ VZ/20	CL 151+94.53 O/S = 42.77' LT	RELOCATE	CONFLICT IS ANTICIPATED TO BE ADDRESSED PRIOR TO COMMENCMENT OF CONSTRUCTION
NYSEG	2142/2	CL 152+40.03 O/S = 58.01' RT	TO REMAIN	---
NYSEG	NYSEG/ 182-1	CL 153+19.45 O/S = 44.98' RT	TO REMAIN	---
NYSEG	NYSEG/217/ 182/NYT/19	CL 153+80.50 O/S = 45.02' LT	TO REMAIN	---
NYSEG	NYSEG/181	CL 155+49.02 O/S = 42.75' LT	TO REMAIN	---
NYSEG	NYSEG/217/ 181-1/ NYT/18-1	CL 156+10.39 O/S = 51.24' RT	TO REMAIN	---
NYSEG	NYSEG/217/ 179/NYT/17	CL 157+05.09 O/S = 38.19' LT	TO REMAIN	---
NYSEG	NYSEG/ 119-1/ NYT/11-1	CL 157+15.19 O/S = 43.20' RT	TO REMAIN	---

CONTINUES AT THE TOP OF DWG NO. MST-X4

AFFIX SEAL:
ON:

ALTERED BY:
ON:

D264571
STATE OF NEW YORK
ROBERT F. SCHALLER
NO. 082465
LICENSED PROFESSIONAL ENGINEER

AS-BUILT REVISIONS
DESCRIPTION OF ALTERATIONS:

NY 78, TRANSIT ROAD, S.H. 1334A-1
FRENCH ROAD TO WEHRLE DRIVE
TOWNS OF CHEEKTOWAGA & LANCASTER
VILLAGE OF DEPEW
COUNTY: ERIE REGION: 05

PIN 5813.61
NY 78
UTILITY QUALITY LEVEL D

BRIDGES

CULVERTS

ALL DIMENSIONS IN ft UNLESS OTHERWISE NOTED

MISCELLANEOUS TABLES - SHEET 16
UTILITY POLES

CONTRACT NUMBER
D264571

DRAWING NO. MST-16
SHEET NO. 92

IT IS A VIOLATION OF LAW FOR ANY PERSON, UNLESS THEY ARE ACTING UNDER THE DIRECTION OF A LICENSED PROFESSIONAL ENGINEER, ARCHITECT, LANDSCAPE ARCHITECT, OR LAND SURVEYOR, TO ALTER AN ITEM IN ANY WAY. IF AN ITEM BEARING THE STAMP OF A LICENSED PROFESSIONAL IS ALTERED, THE ALTERING ENGINEER, ARCHITECT, LANDSCAPE ARCHITECT, OR LAND SURVEYOR SHALL STAMP THE DOCUMENT AND INCLUDE THE NOTATION "ALTERED BY" FOLLOWED BY THEIR SIGNATURE, THE DATE OF SUCH ALTERATION, AND A SPECIFIC DESCRIPTION OF THE ALTERATION.

NEW YORK STATE OF OPPORTUNITY. Department of Transportation

DESIGN SUPERVISOR S. S. VAIDYA
JOB MANAGER R. F. SCHALLER
DESIGN V. M. DINATALE
CHECK R. F. SCHALLER
DRAFTING V. M. DINATALE
CHECK R. F. SCHALLER
PROJECT MANAGER S. S. VAIDYA

FILE NAME = 581361_CPH_HWY_MST-16.dgn
DATE/TIME = 22-JUN-2021 12:39
USER = ccrites

UTILITY POLE TABLE

OWNER	POLE NO.	STATION/OFFSET	DISPOSITION	COMMENTS
NYSEG	NYSEG/178/ NYT/16	CL 158+64.42 O/S = 37.30' LT	TO REMAIN	---
NYSEG	NYSEG/ 178-1/ NYT/1-1	CL 159+52.90 O/S = 60.84' RT	TO REMAIN	---
NYSEG	177/NYT/15	CL 160+15.49 O/S = 38.13' LT	TO REMAIN	---
NYSEG	NYSEG/ 177-1/ NYT/6066R	CL 160+45.95 O/S = 55.74' LT	TO REMAIN	---
NYSEG	515X7/ NYSEG/217/ 176	CL 161+53.86 O/S = 39.42' LT	TO REMAIN	---
NYSEG	NO *	CL 161+55.30 O/S = 39.23' LT	TO REMAIN	---
NYSEG	NYSEG/217/ 175/NYT/13	CL 162+31.86 O/S = 40.60' LT	TO REMAIN	---
NYSEG	NYSEG/ 175-1	CL 162+36.52 O/S = 53.41' RT	TO REMAIN	---
NYSEG	NYSEG/217/ 174/NYT/12	CL 163+65.70 O/S = 41.17' LT	TO REMAIN	---
NYSEG	NYSEG/217/ 172/NYT/11	CL 164+90.15 O/S = 41.88' LT	TO REMAIN	---
NYSEG	NYSEG/217/ 172/NYT/10	CL 166+29.46 O/S = 41.49' LT	TO REMAIN	---
NYSEG	NYSEG/ 172-1	CL 166+67.47 O/S = 50.62' RT	TO REMAIN	---
NYSEG	NYSEG/217/ 171/NYT/9	CL 167+70.86 O/S = 43.07' LT	TO REMAIN	---
NYSEG	NYSEG/217/ 170/NYT/8	CL 168+45.07 O/S = 42.31' LT	TO REMAIN	---
NYSEG	NYSEG/217/ 169B/ NYT/7.5	CL 169+06.95 O/S = 42.26' LT	TO REMAIN	---
NYSEG	NG/ 2276-36	CL 170+22.89 O/S = 70.37' LT	TO REMAIN	---
NYSEG	NG 35	CL 170+25.50 O/S = 48.81' RT	TO REMAIN	---
NYSEG	NYSEG/169A NYT/7	CL 170+64.58 O/S = 36.83' LT	RELOCATE	CONFLICT IS ANTICIPATED TO BE ADDRESSED PRIOR TO COMMENCMENT OF CONSTRUCTION
NYSEG	NYSEG/294/ NYT/104	CL G 277+72.21 O/S = 59.46' RT	TO REMAIN	---
NYSEG	NYT 103	CL G 279+06.20 O/S = 54.79' RT	TO REMAIN	---
NYSEG	NYSEG/295	CL G 279+37.90 O/S = 47.67' LT	TO REMAIN	---

CONTINUES AT THE TOP OF THE NEXT TABLE

UTILITY POLE TABLE (CONTINUED)

OWNER	POLE NO.	STATION/OFFSET	DISPOSITION	COMMENTS
NYSEG	NYSEG/ 294/NYT/102	CL G 280+34.59 O/S = 54.27' RT	TO REMAIN	---
NYSEG	NYSEG/296	CL G 281+27.75 O/S = 48.05' LT	TO REMAIN	---
NYSEG	NYSEG/ 297-1/ NYT/101	CL G 283+19.51 O/S = 54.04' RT	TO REMAIN	---
NYSEG	NYSEG/ 267/297	CL G 283+15.95 O/S = 48.59' LT	TO REMAIN	---
NYSEG	NYSEG/301/ NYT/2/X	CL G 286+65.37 O/S = 43.16' RT	TO REMAIN	---
NYSEG	NYSEG/300/ NYT/3.5	CL G 287+73.46 O/S = 53.07' LT	TO REMAIN	---
NYSEG	NYSEG/ 302/NYT/3	CL G 288+00.01 O/S = 43.34' RT	TO REMAIN	---
NYSEG	NYSEG/ 303/NYT/4	CL G 289+09.21 O/S = 41.99' RT	TO REMAIN	---
NYSEG	NYSEG/ 304/NYT/5	CL G 290+13.18 O/S = 39.39' RT	TO REMAIN	---
NYSEG	NYSEG/ 304-1/ NYT/5-1	CL G 290+15.36 O/S = 48.32' LT	TO REMAIN	---
NYSEG	NO *	CL G 290+81.14 O/S = 36.22' RT	TO REMAIN	---

UTILITY POLE TABLE (CONTINUED)

OWNER	POLE NO.	STATION/OFFSET	DISPOSITION	COMMENTS

AFFIX SEAL:
ON:

ALTERED BY:
ON:

D264571

STATE OF NEW YORK
ROBERT F. SCHALLER
NO. 082465
LICENSED PROFESSIONAL ENGINEER

AS-BUILT REVISIONS
DESCRIPTION OF ALTERATIONS:

NY 78, TRANSIT ROAD, S.H. 1334A-1
FRENCH ROAD TO WEHRLE DRIVE
TOWNS OF CHEEKTOWAGA & LANCASTER
VILLAGE OF DEPEW
COUNTY: ERIE REGION: 05

PIN 5813.61
NY 78
UTILITY QUALITY LEVEL D

BRIDGES

CULVERTS

ALL DIMENSIONS IN ft UNLESS OTHERWISE NOTED

MISCELLANEOUS TABLES - SHEET 17
UTILITY POLES

CONTRACT NUMBER
D264571

DRAWING NO. MST-17
SHEET NO. 93

IT IS A VIOLATION OF LAW FOR ANY PERSON, UNLESS THEY ARE ACTING UNDER THE DIRECTION OF A LICENSED PROFESSIONAL ENGINEER, ARCHITECT, LANDSCAPE ARCHITECT, OR LAND SURVEYOR, TO ALTER AN ITEM IN ANY WAY. IF AN ITEM BEARING THE STAMP OF A LICENSED PROFESSIONAL IS ALTERED, THE ALTERING ENGINEER, ARCHITECT, LANDSCAPE ARCHITECT, OR LAND SURVEYOR SHALL STAMP THE DOCUMENT AND INCLUDE THE NOTATION "ALTERED BY" FOLLOWED BY THEIR SIGNATURE, THE DATE OF SUCH ALTERATION, AND A SPECIFIC DESCRIPTION OF THE ALTERATION.

NEW YORK STATE OF OPPORTUNITY. Department of Transportation

DESIGN SUPERVISOR S. S. VAIDYA
JOB MANAGER R. F. SCHALLER
DESIGN V. M. DINATALE
CHECK R. F. SCHALLER
DRAFTING V. M. DINATALE
CHECK R. F. SCHALLER
PROJECT MANAGER S. S. VAIDYA

FILE NAME = 581361_CPH_HWY_MST-17.dgn
DATE/TIME = 22-JUN-2021 12:39
USER = ccrites

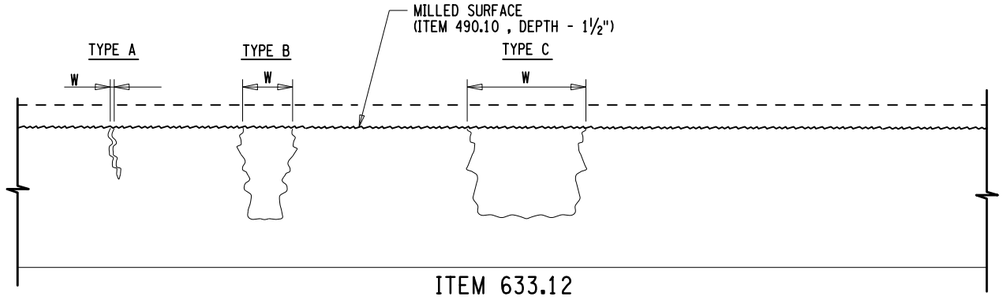

ITEM 633.12
CLEANING, SEALING AND/OR FILLING CRACKS

N.T.S.

NOTES:

1. ALL REPAIR LOCATIONS ARE AS DETERMINED BY EIC.
2. ALL PAVEMENT REPAIRS SHALL BE MADE PRIOR TO THE TOP COURSE OVERLAY AND AFTER MILLING OPERATIONS. PAYMENT UNDER ITEM 633.12 WILL BE LUMP SUM.
3. REFER TO TREATMENT TABLE FOR APPROPRIATE TREATMENT BASED ON DIMENSION "W". REFER TO SECTION 633-3.02 FOR ADDITIONAL INFORMATION.
4. APPROXIMATELY 1% (ONE PERCENT) OF THE PAVEMENT AREA REQUIRES REPAIR UNDER ITEM 633.12.
5. CONTACT REGIONAL MATERIALS FOR GUIDANCE WHEN DETERMINING THE EXTENT OF WORK UNDER THIS ITEM.

TREATMENT TABLE

TYPE	WIDTH OF REPAIR "W"	TREATMENT
A	< ¼ INCH	NO ACTION REQUIRED
B	¼ INCH - 1 INCH	FILL WITH ASPHALT FILLER - REPAIR UNDER 633.12
C	> 1 INCH	FILL WITH SHIM COURSE OR COLD PATCH - REPAIR UNDER 633.12

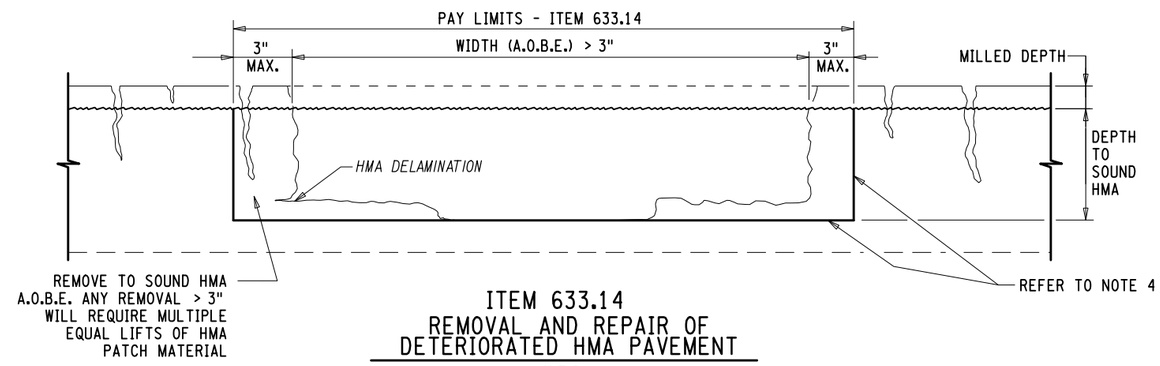

ITEM 633.14
REMOVAL AND REPAIR OF DETERIORATED HMA PAVEMENT

N.T.S.

NOTES:

1. ALL REPAIR LOCATIONS ARE AS DETERMINED BY EIC.
2. ALL PAVEMENT REPAIRS SHALL BE MADE PRIOR TO THE TOP COURSE OVERLAY AND AFTER MILLING OPERATIONS. PAYMENT UNDER ITEM 633.14 WILL BE BASED ON THE FIELD MEASURED AREA OF THE REPAIR.
3. WHEN USING COLD MILLING OPERATIONS TO REMOVE DETERIORATED HMA PAVEMENT WHERE W < 18", THE PAY LIMIT SHALL BE LIMITED TO 18" REGARDLESS OF THE SIZE MILLING MACHINE THE CONTRACTOR USES.
4. TACK COAT SHALL BE APPLIED TO ALL HORIZONTAL AND VERTICAL SURFACES PRIOR TO PLACEMENT OF HMA WITHIN THE REPAIR AND BETWEEN HMA LIFTS.
5. REFER TO SECTION 633-3.03 & 3.04 FOR HMA PLACEMENT REQUIREMENTS WITHIN THE REPAIR.
6. CONTACT REGIONAL MATERIALS FOR GUIDANCE WHEN DETERMINING THE EXTENT OF WORK UNDER THIS ITEM.

AFFIX SEAL: ON:	ALTERED BY: ON:

AS-BUILT REVISIONS
DESCRIPTION OF ALTERATIONS:

NY 78, TRANSIT ROAD, S.H. 1334A-1
FRENCH ROAD TO WEHRLE DRIVE
TOWNS OF CHEEKTOWAGA & LANCASTER
VILLAGE OF DEPEW
COUNTY: ERIE REGION: 05

PIN 5813.61
NY 78
UTILITY QUALITY LEVEL D

BRIDGES

CULVERTS

ALL DIMENSIONS IN ft UNLESS OTHERWISE NOTED

MISCELLANEOUS DETAILS
PAVEMENT REPAIRS

CONTRACT NUMBER
D264571

DRAWING NO. MSD-1
SHEET NO. 94

IT IS A VIOLATION OF LAW FOR ANY PERSON, UNLESS THEY ARE ACTING UNDER THE DIRECTION OF A LICENSED PROFESSIONAL ENGINEER, ARCHITECT, LANDSCAPE ARCHITECT, OR LAND SURVEYOR, TO ALTER AN ITEM IN ANY WAY. IF AN ITEM BEARING THE STAMP OF A LICENSED PROFESSIONAL IS ALTERED, THE ALTERING ENGINEER, ARCHITECT, LANDSCAPE ARCHITECT, OR LAND SURVEYOR SHALL STAMP THE DOCUMENT AND INCLUDE THE NOTATION "ALTERED BY" FOLLOWED BY THEIR SIGNATURE, THE DATE OF SUCH ALTERATION, AND A SPECIFIC DESCRIPTION OF THE ALTERATION.

NEW YORK STATE OF OPPORTUNITY. Department of Transportation

PROJECT MANAGER S. S. VAIDYA
CHECK R. F. SCHALLER
DRAFTING C. L. CRITES
CHECK R. F. SCHALLER
DESIGN C. L. CRITES
JOB MANAGER R. F. SCHALLER
DESIGN SUPERVISOR S. S. VAIDYA
FILE NAME = 581361_CPH_HWY_MSD-1.dgn
DATE/TIME = 22-JUN-2021 12:39
USER = ccrites

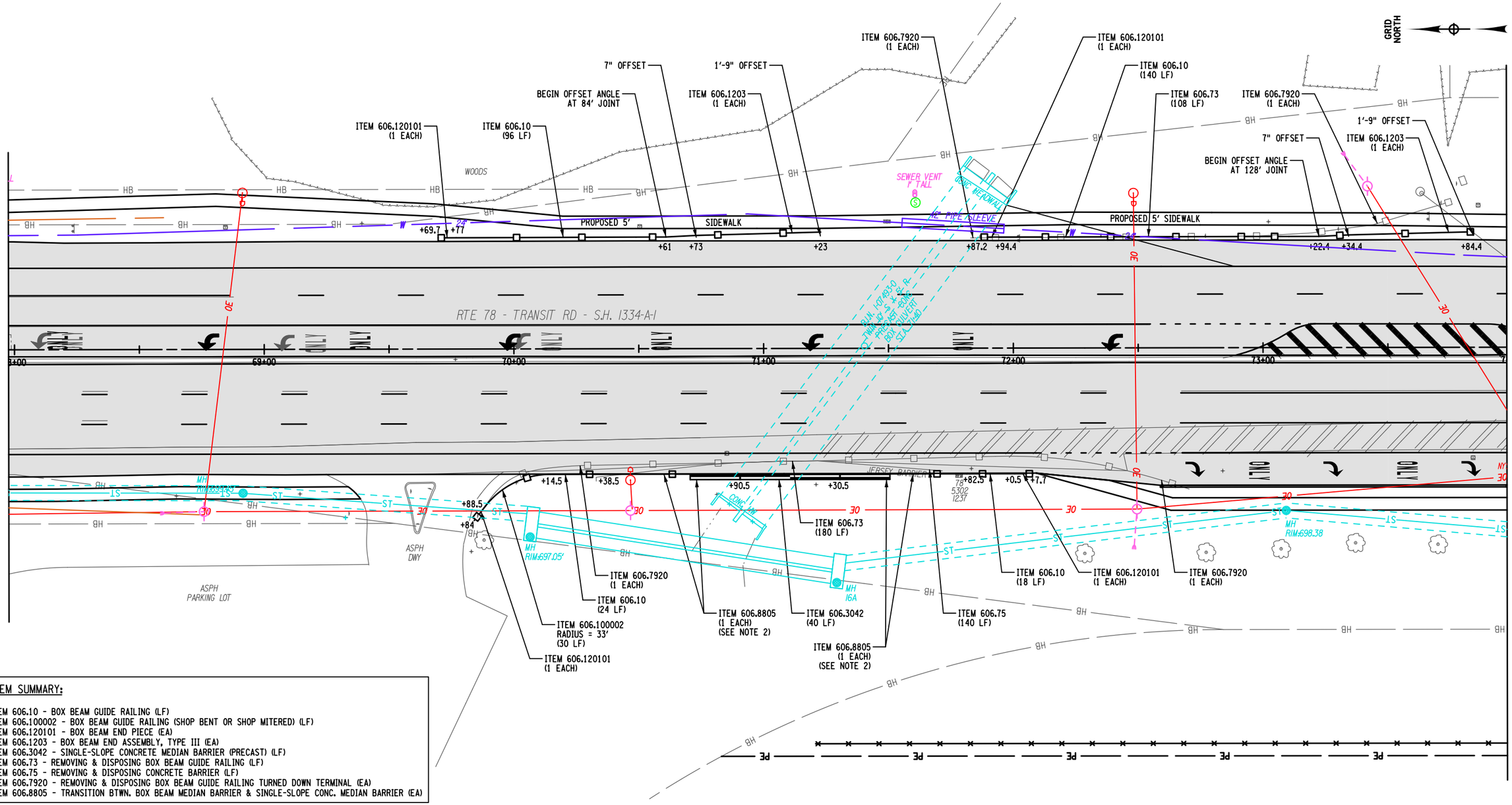

ITEM SUMMARY:

ITEM 606.10 - BOX BEAM GUIDE RAILING (LF)
ITEM 606.100002 - BOX BEAM GUIDE RAILING (SHOP BENT OR SHOP MITERED) (LF)
ITEM 606.120101 - BOX BEAM END PIECE (EA)
ITEM 606.1203 - BOX BEAM END ASSEMBLY, TYPE III (EA)
ITEM 606.3042 - SINGLE-SLOPE CONCRETE MEDIAN BARRIER (PRECAST) (LF)
ITEM 606.73 - REMOVING & DISPOSING BOX BEAM GUIDE RAILING (LF)
ITEM 606.75 - REMOVING & DISPOSING CONCRETE BARRIER (LF)
ITEM 606.7920 - REMOVING & DISPOSING BOX BEAM GUIDE RAILING TURNED DOWN TERMINAL (EA)
ITEM 606.8805 - TRANSITION BTWN. BOX BEAM MEDIAN BARRIER & SINGLE-SLOPE CONC. MEDIAN BARRIER (EA)

20 0 20 40 60 80'
1" = 40'

NOTES:

1. REFER TO DWG. MST-1 FOR GUIDERAIL AND BARRIER TABLES.
2. THE TRANSITION RAIL SHALL REMAIN BOX BEAM GUIDERAIL AND NOT TRANSITION TO BOX BEAM MEDIAN BARRIER.

AFFIX SEAL:
ON:

ALTERED BY:
ON:

D264571
STATE OF NEW YORK
ROBERT F. SCHALLER
LICENSED PROFESSIONAL ENGINEER
NO. 082465

AS-BUILT REVISIONS
DESCRIPTION OF ALTERATIONS:

NY 78, TRANSIT ROAD, S.H. 1334A-1
FRENCH ROAD TO WEHRLE DRIVE
TOWNS OF CHEEKTOWAGA & LANCASTER
VILLAGE OF DEPEW
COUNTY: ERIE REGION: 05

PIN 5813.61
NY 78
UTILITY QUALITY LEVEL D

BRIDGES

CULVERTS

ALL DIMENSIONS IN ft UNLESS OTHERWISE NOTED

GUIDERAIL PLANS
GUIDERAIL LAYOUT DETAILS 1

CONTRACT NUMBER
D264571

DRAWING NO. GRP-1
SHEET NO. 95

IT IS A VIOLATION OF LAW FOR ANY PERSON, UNLESS THEY ARE ACTING UNDER THE DIRECTION OF A LICENSED PROFESSIONAL ENGINEER, ARCHITECT, LANDSCAPE ARCHITECT, OR LAND SURVEYOR, TO ALTER AN ITEM IN ANY WAY. IF AN ITEM BEARING THE STAMP OF A LICENSED PROFESSIONAL IS ALTERED, THE ALTERING ENGINEER, ARCHITECT, LANDSCAPE ARCHITECT, OR LAND SURVEYOR SHALL STAMP THE DOCUMENT AND INCLUDE THE NOTATION "ALTERED BY" FOLLOWED BY THEIR SIGNATURE, THE DATE OF SUCH ALTERATION, AND A SPECIFIC DESCRIPTION OF THE ALTERATION.

NEW YORK STATE OF OPPORTUNITY. Department of Transportation

PROJECT MANAGER S. S. VAIDYA
CHECK R. F. SCHALLER
DRAFTING C. L. CRITES
CHECK R. F. SCHALLER
DESIGN C. L. CRITES
JOB MANAGER R. F. SCHALLER
DESIGN SUPERVISOR S. S. VAIDYA

FILE NAME = 581361_CPH_HWY_GRP-1.dgn
DATE/TIME = 22-JUN-2021 12:39
USER = ccrites

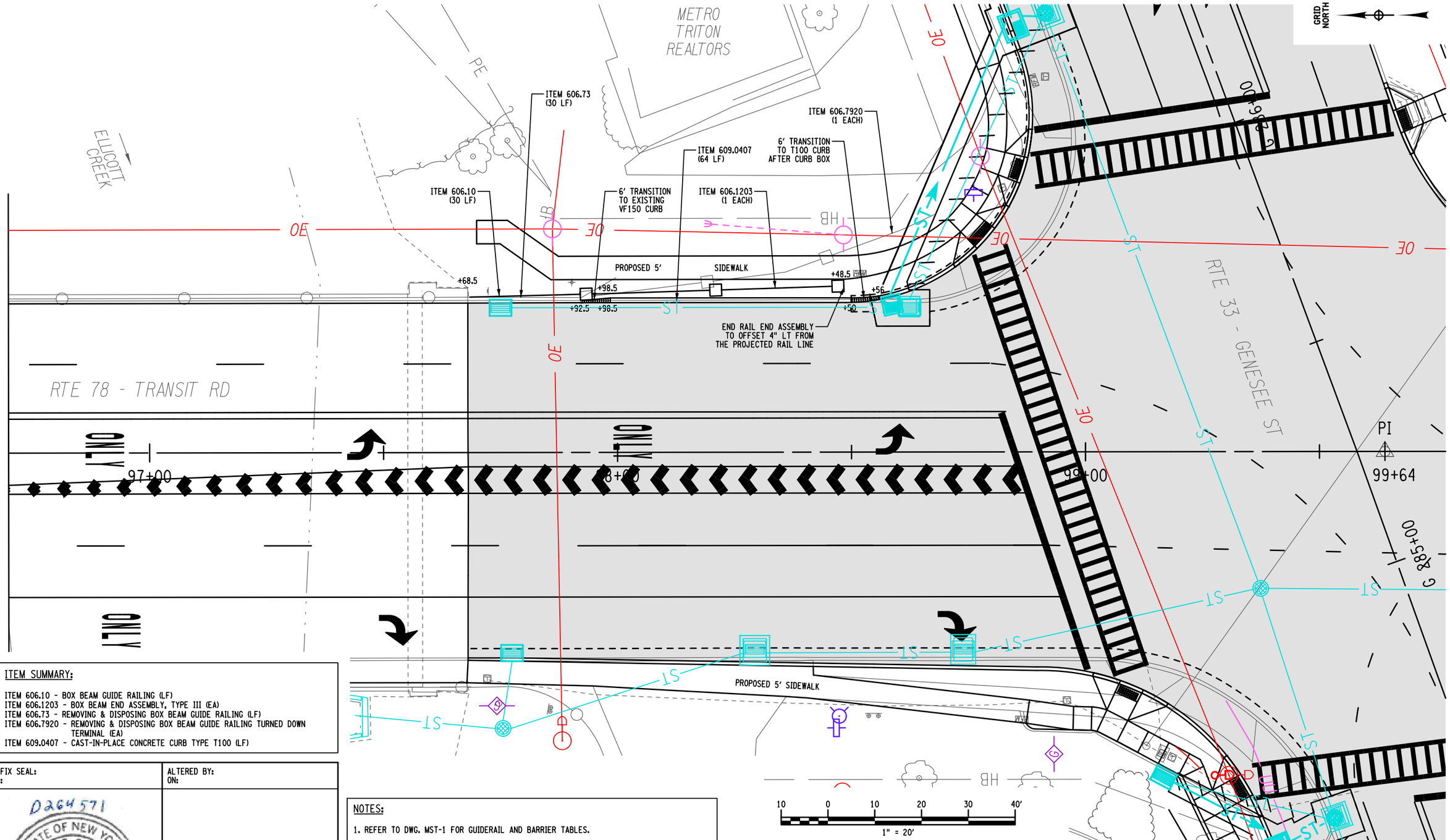

ITEM SUMMARY:

ITEM 606.10 - BOX BEAM GUIDE RAILING (LF)
ITEM 606.1203 - BOX BEAM END ASSEMBLY, TYPE III (EA)
ITEM 606.73 - REMOVING & DISPOSING BOX BEAM GUIDE RAILING (LF)
ITEM 606.7920 - REMOVING & DISPOSING BOX BEAM GUIDE RAILING TURNED DOWN TERMINAL (EA)
ITEM 609.0407 - CAST-IN-PLACE CONCRETE CURB TYPE T100 (LF)

NOTES:

1. REFER TO DWG. MST-1 FOR GUIDERAIL AND BARRIER TABLES.

AFFIX SEAL:
ON:

D264571
STATE OF NEW YORK
ROBERT F. SCHALLER
NO. 082465
LICENSED PROFESSIONAL ENGINEER

ALTERED BY:
ON:

AS-BUILT REVISIONS
DESCRIPTION OF ALTERATIONS:

NY 78, TRANSIT ROAD, S.H. 1334A-1	PIN 5813.61	BRIDGES	CULVERTS	ALL DIMENSIONS IN ft UNLESS OTHERWISE NOTED	CONTRACT NUMBER
FRENCH ROAD TO WEHRLE DRIVE	NY 78			GUIDERAIL PLANS	D264571
TOWNS OF CHEEKTOWAGA & LANCASTER	UTILITY QUALITY LEVEL D			GUIDERAIL LAYOUT DETAILS 2	
VILLAGE OF DEPEW					DRAWING NO. GRP-2
COUNTY: ERIE REGION: 05					SHEET NO. 96

IT IS A VIOLATION OF LAW FOR ANY PERSON, UNLESS THEY ARE ACTING UNDER THE DIRECTION OF A LICENSED PROFESSIONAL ENGINEER, ARCHITECT, LANDSCAPE ARCHITECT, OR LAND SURVEYOR, TO ALTER AN ITEM IN ANY WAY. IF AN ITEM BEARING THE STAMP OF A LICENSED PROFESSIONAL IS ALTERED, THE ALTERING ENGINEER, ARCHITECT, LANDSCAPE ARCHITECT, OR LAND SURVEYOR SHALL STAMP THE DOCUMENT AND INCLUDE THE NOTATION "ALTERED BY" FOLLOWED BY THEIR SIGNATURE, THE DATE OF SUCH ALTERATION, AND A SPECIFIC DESCRIPTION OF THE ALTERATION.

NEW YORK STATE OF OPPORTUNITY. Department of Transportation

PROJECT MANAGER S. S. VAIDYA
CHECK R. F. SCHALLER
DRAFTING C. L. CRITES
CHECK R. F. SCHALLER
DESIGN C. L. CRITES
JOB MANAGER R. F. SCHALLER
DESIGN SUPERVISOR S. S. VAIDYA
FILE NAME = 581361_CPH_HWY_GRP-2.dgn
DATE/TIME = 22-JUN-2021 12:39
USER = cortes

SUMMARY OF EARTHWORK (ITEMS 203.02 AND 203.03 ONLY)					
SOURCE	EXCAVATION			ITEM 203.02	ITEM 203.03
	T_E	C_R	T_U	C_T	F_T
WIDENINGS (SEE GNP-7 - GNP-13)	5375.00		872.00	6247.00	201.00
SIDEWALKS (SEE GNP-6 - GNP 27)	2688.67		1256.33	3943.00	1243.00
ASPHALT STRIP REMOVALS (SEE GNP-12 - GNP-22)	253.00			253.00	
DRIVEWAYS (SEE GNP-12 - GNP-27)	1215.00			1215.00	
MID BLOCK CROSSING (SEE GNP-20 - GNP-23)	12.00			12.00	
CURB RAMPS (SEE CRP-1- CRP-23)	240.00			240.00	
WATER LINE (SEE WLP-1 - WLP-2)					170.00
TOTALS	9781.67		2128.33	11910.00	1614.00

SUMMARY OF TRENCH AND CULVERT EXCAVATION (ITEM 206.0201 ONLY)			
SOURCE	EXCAVATION		ITEM 206.0201
	ROCK	NON-ROCK	
UNDERDRAIN FOR WIDENINGS		273.00	273.00
DRIANAGE STRUCTURES AND PIPES		1061.00	1061.00
WATERLINE REMOVAL AND RELOCATION		460.00	460.00
DRIANAGE STRUCTURE REMOVAL		70.00	70.00
TOTALS		1864.00	1864.00

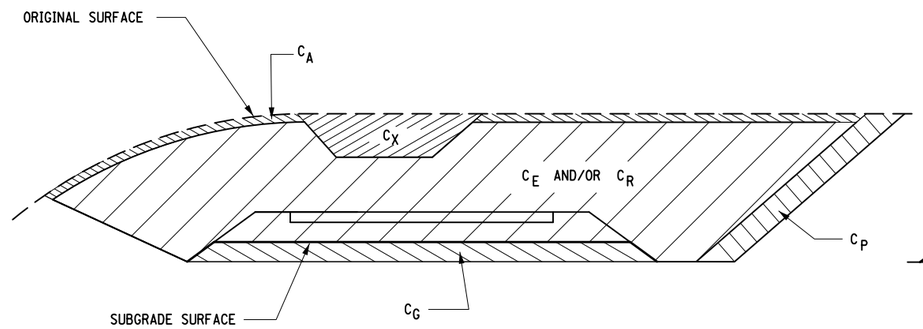

CUT SECTION

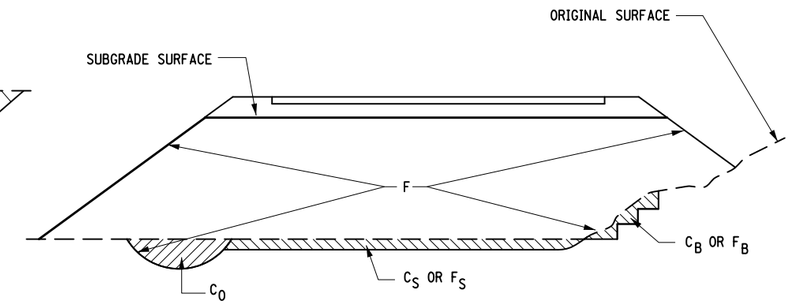

FILL SECTION

DEFINITIONS:

C_B - EXCAVATION FOR REQUIRED BENCHING, (BOTH LONGITUDINAL AND TRANSVERSE).

C_G - EXCAVATION FOR SUBGRADE IMPROVEMENT.

C_P - EXCAVATION FROM CUT SLOPE NECESSARY TO PLACE SLOPE PROTECTION.

C_E - PORTION OF CUT ASSUMED TO BE EARTH SUITABLE FOR EMBANKMENT CONSTRUCTION, EXCLUDING C_G AND C_P.

T_E - $(C_B + C_G + C_P + C_E)$ TOTAL EARTH EXCAVATION ASSUMED SUITABLE FOR EMBANKMENT CONSTRUCTION.

C_A - EXCAVATION OF TOPSOIL (UNSUITABLE MATERIAL) IN CUT.

C_S - EXCAVATION OF TOPSOIL (UNSUITABLE MATERIAL) UNDER EMBANKMENT.

C_X - EXCAVATION OF UNSUITABLE MATERIAL IN CUT: SWAMP OR DUMP

C_O - EXCAVATION OF UNSUITABLE MATERIAL BENEATH EMBANKMENT: SWAMP OR DUMP

T_U - $(C_A + C_S + C_X + C_O)$ TOTAL EXCAVATION ASSUMED UNSUITABLE FOR EMBANKMENT CONSTRUCTION.

C_R - PORTION OF CUT ASSUMED TO BE ROCK, INCLUDING C_G IF APPLICABLE.

C_T - $(T_E + T_U + C_R)$ TOTAL EXCAVATION.

DEFINITIONS:

F_B - FILL REQUIRED TO REPLACE BENCHES.

F_S - FILL REQUIRED TO REPLACE TOPSOIL REMOVED BENEATH EMBANKMENTS.

F - FILL REQUIRED TO COMPLETE EMBANKMENT TO SUBGRADE SURFACE AND SIDE-SLOPES AFTER FOUNDATION IS PREPARED.

F_T - $(F_B + F_S + F)$ TOTAL FILL REQUIRED.

T_A - $(T_E \times F_E + C_R \times F_R)$ THE VOLUME WHICH THE SUITABLE EXCAVATED MATERIAL COULD OCCUPY IN EMBANKMENT.

F_E - SHRINKAGE FACTOR FOR EARTH

F_R - SWELL FACTOR FOR ROCK

NOTES:

THE CONTRACTOR'S ATTENTION IS DIRECTED TO THE FACT THAT THESE TABLES ARE ESTIMATED, AND ARE PROVIDED FOR THE PURPOSE OF PREPARING AN ESTIMATE. THEY ARE NOT TO BE CONSTRUED AS BEING EXACT. THEY ARE INTENDED TO QUANTIFY AND QUALIFY THE NATURE OF THE WORK TO BE PERFORMED. SIGNIFICANT DIFFERENCE FROM THIS REPRESENTATION, WHEN ENCOUNTERED DURING THE ACTUAL WORK, WILL BE HANDLED ACCORDING TO THE SPECIFICATIONS GOVERNING THIS PROJECT.

203.02 UNCLASSIFIED EXCAVATION AND DISPOSAL

203.03 EMBANKMENT IN PLACE

206.0201 TRENCH AND CULVERT EXCAVATION

DESIGN SUPERVISOR S. S. VAIDYA | JOB MANAGER R. F. SCHALLER | DESIGN C. L. CRITES | CHECK R. F. SCHALLER | DRAFTING C. L. CRITES | CHECK R. F. SCHALLER | PROJECT MANAGER S. S. VAIDYA

FILE NAME = 581361_CPH_HWY_ESS-1.dgn
DATE/TIME = 22-JUN-2021 15:26
USER = cc-rtes

AS-BUILT REVISIONS
DESCRIPTION OF ALTERATIONS:

NY 78, TRANSIT ROAD, S.H. 1334A-1
FRENCH ROAD TO WEHRLE DRIVE
TOWNS OF CHEEKTOWAGA & LANCASTER
VILLAGE OF DEPEW
COUNTY: ERIE REGION: 05

PIN 5813.61
NY 78
UTILITY QUALITY LEVEL D

BRIDGES

CULVERTS

ALL DIMENSIONS IN yd^3 UNLESS OTHERWISE NOTED

EARTHWORK SUMMARY SHEET 1

CONTRACT NUMBER D264571

DRAWING NO. ESS-1

SHEET NO. 97

NEW YORK STATE OF OPPORTUNITY. Department of Transportation

SUBDIVISION NO.	LOCATION (STATION TO STATION)	SUITABLE EXCAVATION					ROCK	UNSUITABLE EXCAVATION					TOTAL EXCAVATION	EMBANKMENT			
		C_B	C_G	C_P	C_E	T_E	C_R	C_A	C_S	C_X	C_O	T_U	C_T	F_B	F_S	F	F_T
	WIDENINGS (SEE GNP-7 - GNP-13)				5375.00	5375.00						872.00	6247.00				201.00
	SIDEWALKS (SEE GNP-6 - GNP-27)	368.00			2320.67	2688.67						1256.33	3943.00				1243.00
	ASPHALT STRIP REMOVALS (SEE GNP-12 - GNP-22)				253.00	253.00							253.00				
	DRIVEWAYS (SEE GNP-12 - GNP-27)				1215.00	1215.00							1215.00				
	MID BLOCK CORSSING (SEE GNP-20 - GNP-23)				12.00	12.00							12.00				
	CURB RAMPS (SEE CRP-1 - CRP-23)				240.00	240.00							240.00				170.00
	WATER LINE (SEE WLP-1 - WLP-2)																
	TOTALS	368.00			9413.67	9781.67						2128.33	11910.00				1614.00

FOR DEFINITIONS AND NOTES SEE DWG. ESS-1

AS-BUILT REVISIONS
DESCRIPTION OF ALTERATIONS:

NY 78, TRANSIT ROAD, S.H. 1334A-1
FRENCH ROAD TO WEHRLE DRIVE
TOWNS OF CHEEKTOWAGA & LANCASTER
VILLAGE OF DEPEW
COUNTY: ERIE REGION: 05

PIN 5813.61
NY 78
UTILITY QUALITY LEVEL D

BRIDGES

CULVERTS

ALL DIMENSIONS IN yd^3 UNLESS OTHERWISE NOTED

EARTHWORK SUMMARY SHEET 2

CONTRACT NUMBER
D264571

DRAWING NO. ESS-2
SHEET NO. 98

NEW YORK STATE OF OPPORTUNITY. Department of Transportation

DESIGN SUPERVISOR S. S. VAIDYA JOB MANAGER R. F. SCHALLER DESIGN C. L. CRITES CHECK R. F. SCHALLER DRAFTING C. L. CRITES CHECK R. F. SCHALLER PROJECT MANAGER S. S. VAIDYA

FILE NAME = 581361_CPH_HWY_ESS-2.dgn
DATE/TIME = 22-JUN-2021 15:26
USER = cc-tes

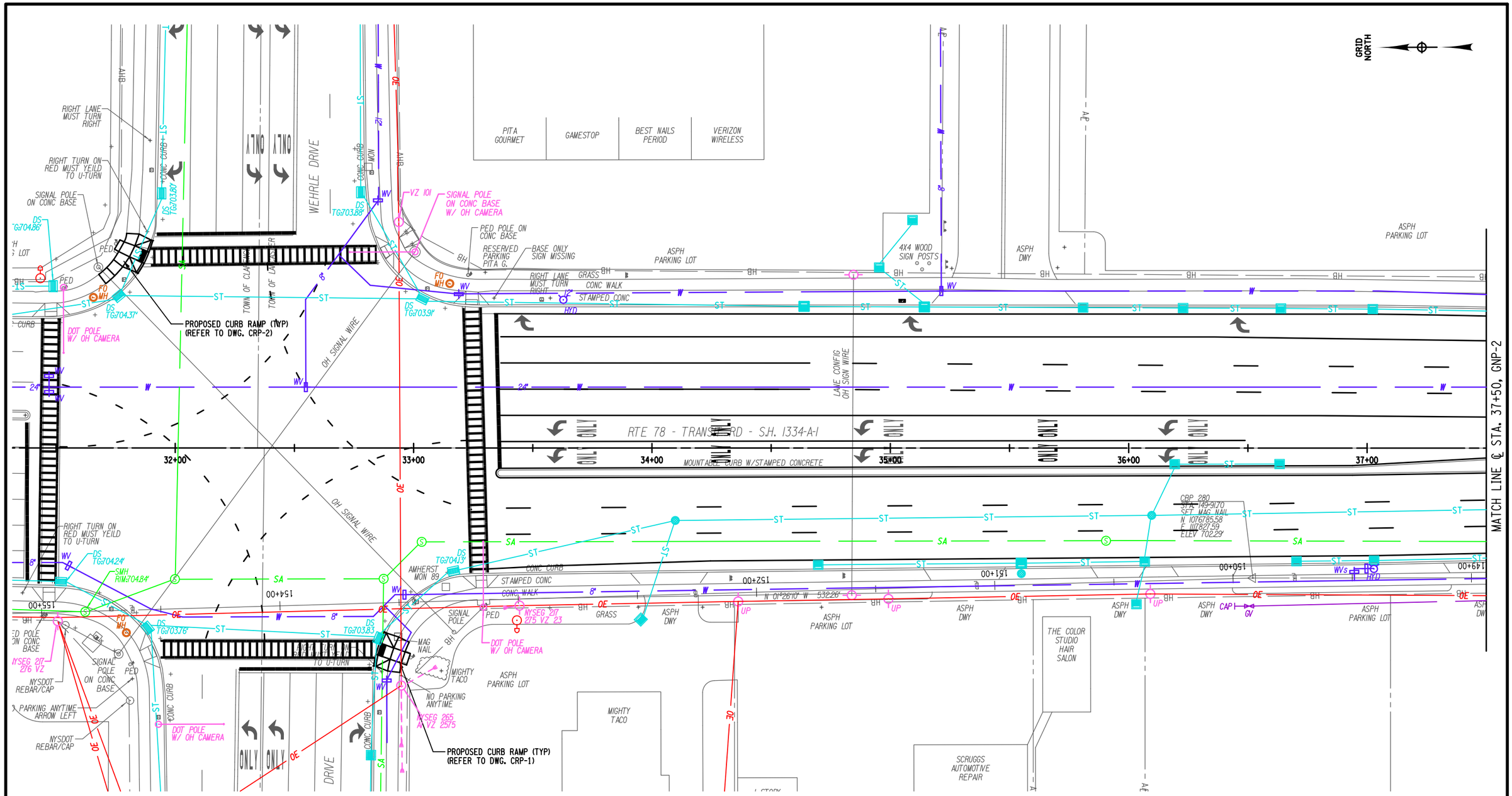

20 0 20 40 60 80'

1" = 40'

NOTES:

1. REFER TO DWGS. TYP-1 THRU TYP-10 FOR TYPICAL SECTIONS.
2. REFER TO DWGS. MST-1 THRU MST-17 FOR ITEM TABLES.
3. REFER TO DWGS. STP-1 THRU STP-27 FOR STRIPING PLANS.
4. REFER TO DWGS. DRN-1 THRU DRN-27 FOR PROPOSED DRAINAGE PLANS.

AFFIX SEAL:
ON:

ALTERED BY:
ON:

D264571

STATE OF NEW YORK
ROBERT F. SCHALLER
NO. 082465
LICENSED PROFESSIONAL ENGINEER

AS-BUILT REVISIONS
DESCRIPTION OF ALTERATIONS:

NY 78, TRANSIT ROAD, S.H. 1334A-1
FRENCH ROAD TO WEHRLE DRIVE
TOWNS OF CHEEKTOWAGA & LANCASTER
VILLAGE OF DEPEW
COUNTY: ERIE REGION: 05

PIN 5813.61
NY 78
UTILITY QUALITY LEVEL D

BRIDGES

CULVERTS

ALL DIMENSIONS IN ft UNLESS OTHERWISE NOTED

GENERAL PLANS
STA. 32+31.85 TO STA. 37+50

CONTRACT NUMBER
D264571

DRAWING NO. GNP-1
SHEET NO. 99

IT IS A VIOLATION OF LAW FOR ANY PERSON, UNLESS THEY ARE ACTING UNDER THE DIRECTION OF A LICENSED PROFESSIONAL ENGINEER, ARCHITECT, LANDSCAPE ARCHITECT, OR LAND SURVEYOR, TO ALTER AN ITEM IN ANY WAY. IF AN ITEM BEARING THE STAMP OF A LICENSED PROFESSIONAL IS ALTERED, THE ALTERING ENGINEER, ARCHITECT, LANDSCAPE ARCHITECT, OR LAND SURVEYOR SHALL STAMP THE DOCUMENT AND INCLUDE THE NOTATION "ALTERED BY" FOLLOWED BY THEIR SIGNATURE, THE DATE OF SUCH ALTERATION, AND A SPECIFIC DESCRIPTION OF THE ALTERATION.

NEW YORK STATE OF OPPORTUNITY. Department of Transportation

PROJECT MANAGER S. S. VAIDYA
CHECK R. F. SCHALLER
DRAFTING C. L. CRITES
CHECK R. F. SCHALLER
DESIGN C. L. CRITES
JOB MANAGER R. F. SCHALLER
DESIGN SUPERVISOR S. S. VAIDYA

FILE NAME = 581361_CPH_HWY_GNP-1.dgn
DATE/TIME = 22-JUN-2021 12:40
USER = cortes

PROJECT MANAGER S. S. VAIDYA
CHECK R. F. SCHALLER
DRAFTING C. L. CRITES
DESIGN C. L. CRITES
JOB MANAGER R. F. SCHALLER
DESIGN SUPERVISOR S. S. VAIDYA

FILE NAME = 581361_CPH_HWY_GNP-2.dgn
DATE/TIME = 22-JUN-2021 12:40
USER = ccrites

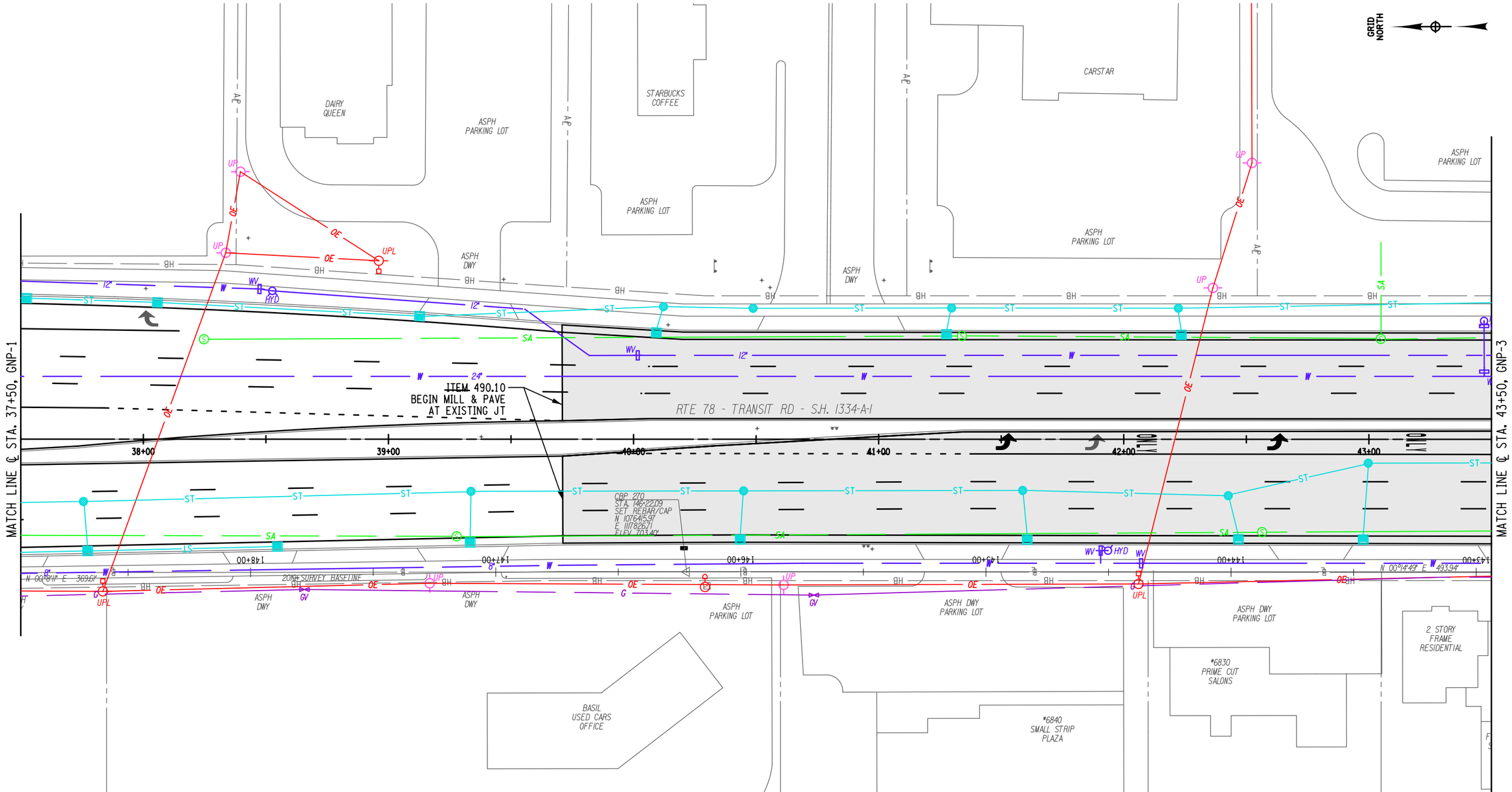

AFFIX SEAL:
ON:

ALTERED BY:
ON:

D264571

STATE OF NEW YORK
ROBERT F. SCHALLER
NO. 082465
LICENSED PROFESSIONAL ENGINEER

20 0 20 40 60 80'
1" = 40'

ITEM SUMMARY:

ITEM 490.10 - PRODUCTION COLD MILLING OF BITUMINOUS CONCRETE (SY)

ITEM SUMMARY:

1. REFER TO DWGS. TYP-1 THRU TYP-10 FOR TYPICAL SECTIONS.
2. REFER TO DWGS. MST-1 THRU MST-17 FOR ITEM TABLES.
3. REFER TO DWGS. STP-1 THRU STP-27 FOR STRIPING PLANS.
4. REFER TO DWGS. DRN-1 THRU DRN-27 FOR PROPOSED DRAINAGE PLANS.

AS-BUILT REVISIONS
DESCRIPTION OF ALTERATIONS:

NY 78, TRANSIT ROAD, S.H. 1334A-1
FRENCH ROAD TO WEHRLE DRIVE
TOWNS OF CHEEKTOWAGA & LANCASTER
VILLAGE OF DEPEW
COUNTY: ERIE REGION: 05

PIN 5813.61
NY 78
UTILITY QUALITY LEVEL D

BRIDGES

CULVERTS

ALL DIMENSIONS IN ft UNLESS OTHERWISE NOTED

GENERAL PLANS
STA. 37+50 TO STA. 43+50

CONTRACT NUMBER
D264571

DRAWING NO. GNP-2
SHEET NO. 100

IT IS A VIOLATION OF LAW FOR ANY PERSON, UNLESS THEY ARE ACTING UNDER THE DIRECTION OF A LICENSED PROFESSIONAL ENGINEER, ARCHITECT, LANDSCAPE ARCHITECT, OR LAND SURVEYOR, TO ALTER AN ITEM IN ANY WAY. IF AN ITEM BEARING THE STAMP OF A LICENSED PROFESSIONAL IS ALTERED, THE ALTERING ENGINEER, ARCHITECT, LANDSCAPE ARCHITECT, OR LAND SURVEYOR SHALL STAMP THE DOCUMENT AND INCLUDE THE NOTATION "ALTERED BY" FOLLOWED BY THEIR SIGNATURE, THE DATE OF SUCH ALTERATION, AND A SPECIFIC DESCRIPTION OF THE ALTERATION.

NEW YORK STATE OF OPPORTUNITY. Department of Transportation

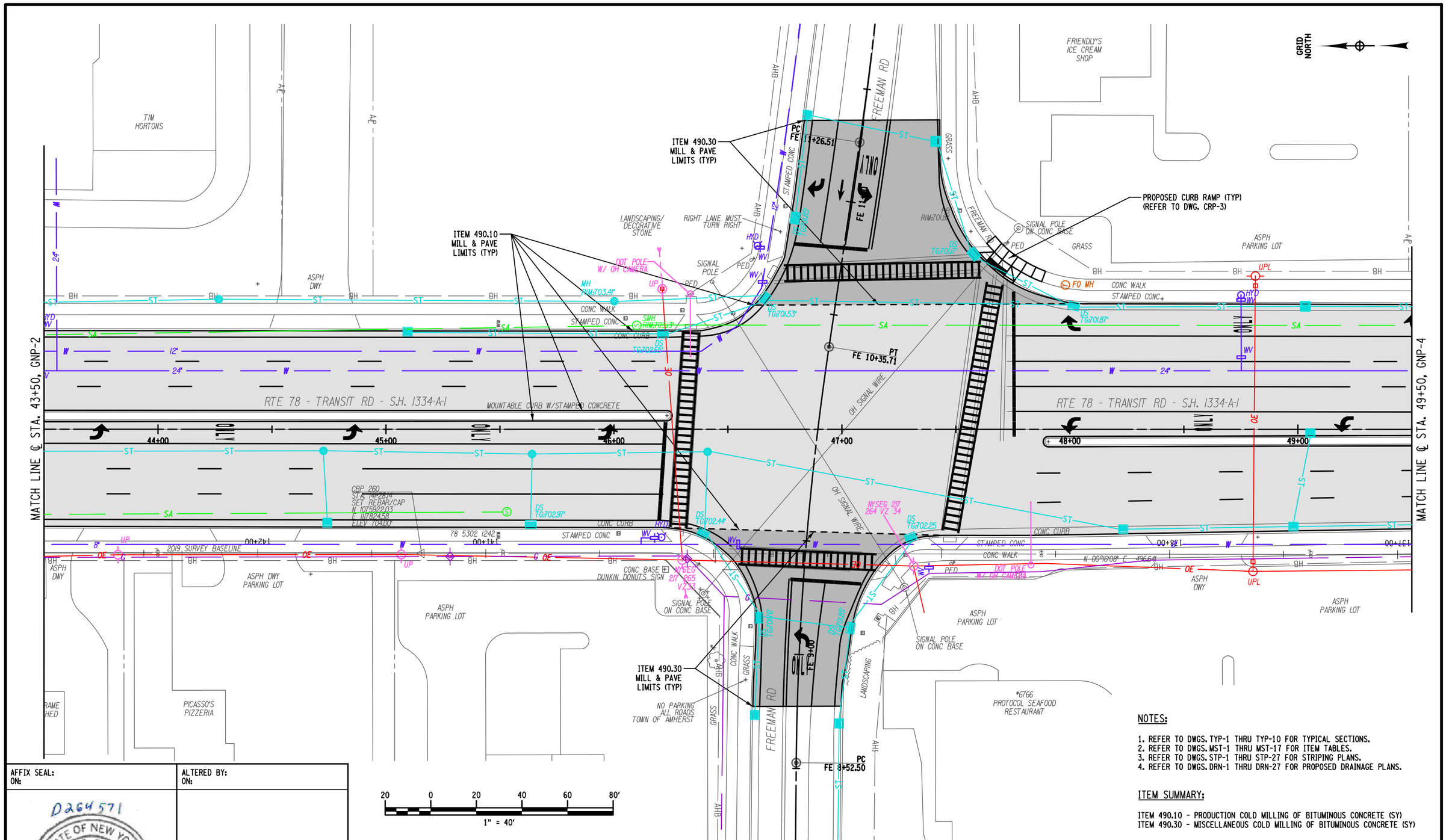

NOTES:

1. REFER TO DWGS. TYP-1 THRU TYP-10 FOR TYPICAL SECTIONS.
2. REFER TO DWGS. MST-1 THRU MST-17 FOR ITEM TABLES.
3. REFER TO DWGS. STP-1 THRU STP-27 FOR STRIPING PLANS.
4. REFER TO DWGS. DRN-1 THRU DRN-27 FOR PROPOSED DRAINAGE PLANS.

ITEM SUMMARY:

ITEM 490.10 - PRODUCTION COLD MILLING OF BITUMINOUS CONCRETE (SY)
ITEM 490.30 - MISCELLANEOUS COLD MILLING OF BITUMINOUS CONCRETE (SY)

AFFIX SEAL:
ON:

ALTERED BY:
ON:

D264571
STATE OF NEW YORK
ROBERT F. SCHALLER
NO. 082463
LICENSED PROFESSIONAL ENGINEER

AS-BUILT REVISIONS
DESCRIPTION OF ALTERATIONS:

NY 78, TRANSIT ROAD, S.H. 1334A-1	PIN 5813.61	BRIDGES	CULVERTS	ALL DIMENSIONS IN ft UNLESS OTHERWISE NOTED
FRENCH ROAD TO WEHRLE DRIVE	NY 78			GENERAL PLANS STA. 43+50 TO STA. 49+50
TOWNS OF CHEEKTOWAGA & LANCASTER	UTILITY QUALITY LEVEL D			
VILLAGE OF DEPEW				
COUNTY: ERIE REGION: 05				

CONTRACT NUMBER D264571
DRAWING NO. GNP-3
SHEET NO. 101

IT IS A VIOLATION OF LAW FOR ANY PERSON, UNLESS THEY ARE ACTING UNDER THE DIRECTION OF A LICENSED PROFESSIONAL ENGINEER, ARCHITECT, LANDSCAPE ARCHITECT, OR LAND SURVEYOR, TO ALTER AN ITEM IN ANY WAY. IF AN ITEM BEARING THE STAMP OF A LICENSED PROFESSIONAL IS ALTERED, THE ALTERING ENGINEER, ARCHITECT, LANDSCAPE ARCHITECT, OR LAND SURVEYOR SHALL STAMP THE DOCUMENT AND INCLUDE THE NOTATION "ALTERED BY" FOLLOWED BY THEIR SIGNATURE, THE DATE OF SUCH ALTERATION, AND A SPECIFIC DESCRIPTION OF THE ALTERATION.

NEW YORK STATE OF OPPORTUNITY. Department of Transportation

PROJECT MANAGER S. S. VAIDYA
CHECK R. F. SCHALLER
DRAFTING C. L. CRITES
CHECK R. F. SCHALLER
DESIGN C. L. CRITES
JOB MANAGER R. F. SCHALLER
DESIGN SUPERVISOR S. S. VAIDYA
FILE NAME = 581361_CPH_HWY_GNP-3.dgn
DATE/TIME = 22-JUN-2021 12:40
USER = crites

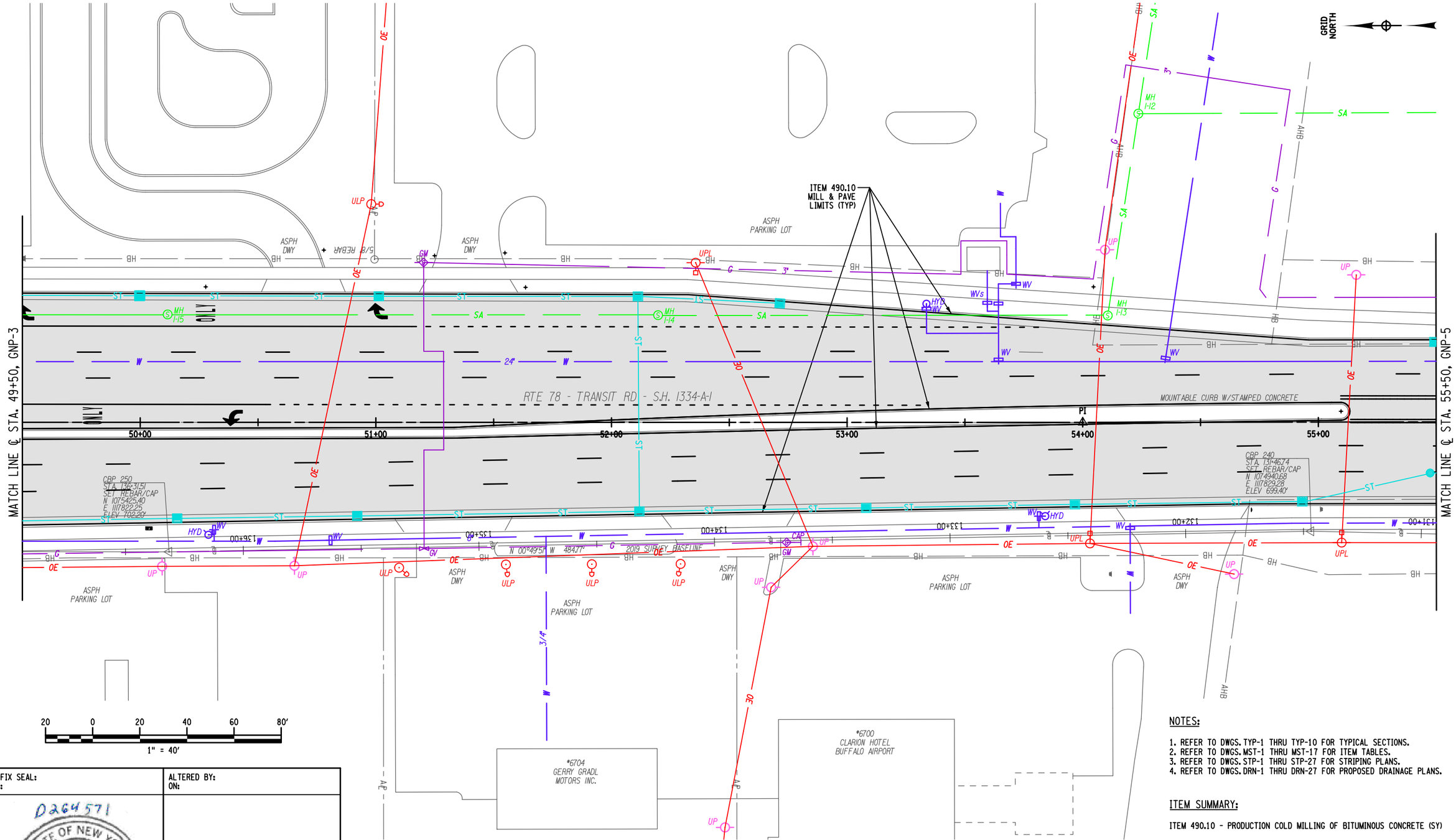

NOTES:

1. REFER TO DWGS. TYP-1 THRU TYP-10 FOR TYPICAL SECTIONS.
2. REFER TO DWGS. MST-1 THRU MST-17 FOR ITEM TABLES.
3. REFER TO DWGS. STP-1 THRU STP-27 FOR STRIPING PLANS.
4. REFER TO DWGS. DRN-1 THRU DRN-27 FOR PROPOSED DRAINAGE PLANS.

ITEM SUMMARY:

ITEM 490.10 - PRODUCTION COLD MILLING OF BITUMINOUS CONCRETE (SY)

AFFIX SEAL:
ON:

ALTERED BY:
ON:

D264571
STATE OF NEW YORK
ROBERT F. SCHALLER
NO. 082465
LICENSED PROFESSIONAL ENGINEER

AS-BUILT REVISIONS
DESCRIPTION OF ALTERATIONS:

NY 78, TRANSIT ROAD, S.H. 1334A-1
FRENCH ROAD TO WEHRLE DRIVE
TOWNS OF CHEEKTOWAGA & LANCASTER
VILLAGE OF DEPEW
COUNTY: ERIE REGION: 05

PIN 5813.61
NY 78
UTILITY QUALITY LEVEL D

BRIDGES

CULVERTS

ALL DIMENSIONS IN ft UNLESS OTHERWISE NOTED

GENERAL PLANS
STA. 49+50 TO STA. 55+50

CONTRACT NUMBER
D264571

DRAWING NO. GNP-4
SHEET NO. 102

IT IS A VIOLATION OF LAW FOR ANY PERSON, UNLESS THEY ARE ACTING UNDER THE DIRECTION OF A LICENSED PROFESSIONAL ENGINEER, ARCHITECT, LANDSCAPE ARCHITECT, OR LAND SURVEYOR, TO ALTER AN ITEM IN ANY WAY. IF AN ITEM BEARING THE STAMP OF A LICENSED PROFESSIONAL IS ALTERED, THE ALTERING ENGINEER, ARCHITECT, LANDSCAPE ARCHITECT, OR LAND SURVEYOR SHALL STAMP THE DOCUMENT AND INCLUDE THE NOTATION "ALTERED BY" FOLLOWED BY THEIR SIGNATURE, THE DATE OF SUCH ALTERATION, AND A SPECIFIC DESCRIPTION OF THE ALTERATION.

NEW YORK STATE OF OPPORTUNITY. Department of Transportation

PROJECT MANAGER S. S. VAIDYA
CHECK R. F. SCHALLER
DRAFTING C. L. CRITES
DESIGN C. L. CRITES
JOB MANAGER R. F. SCHALLER
DESIGN SUPERVISOR S. S. VAIDYA

FILE NAME = 581361_CPH.HWY.GNP-4.dgn
DATE/TIME = 22-JUN-2021 12:40
USER = cortes

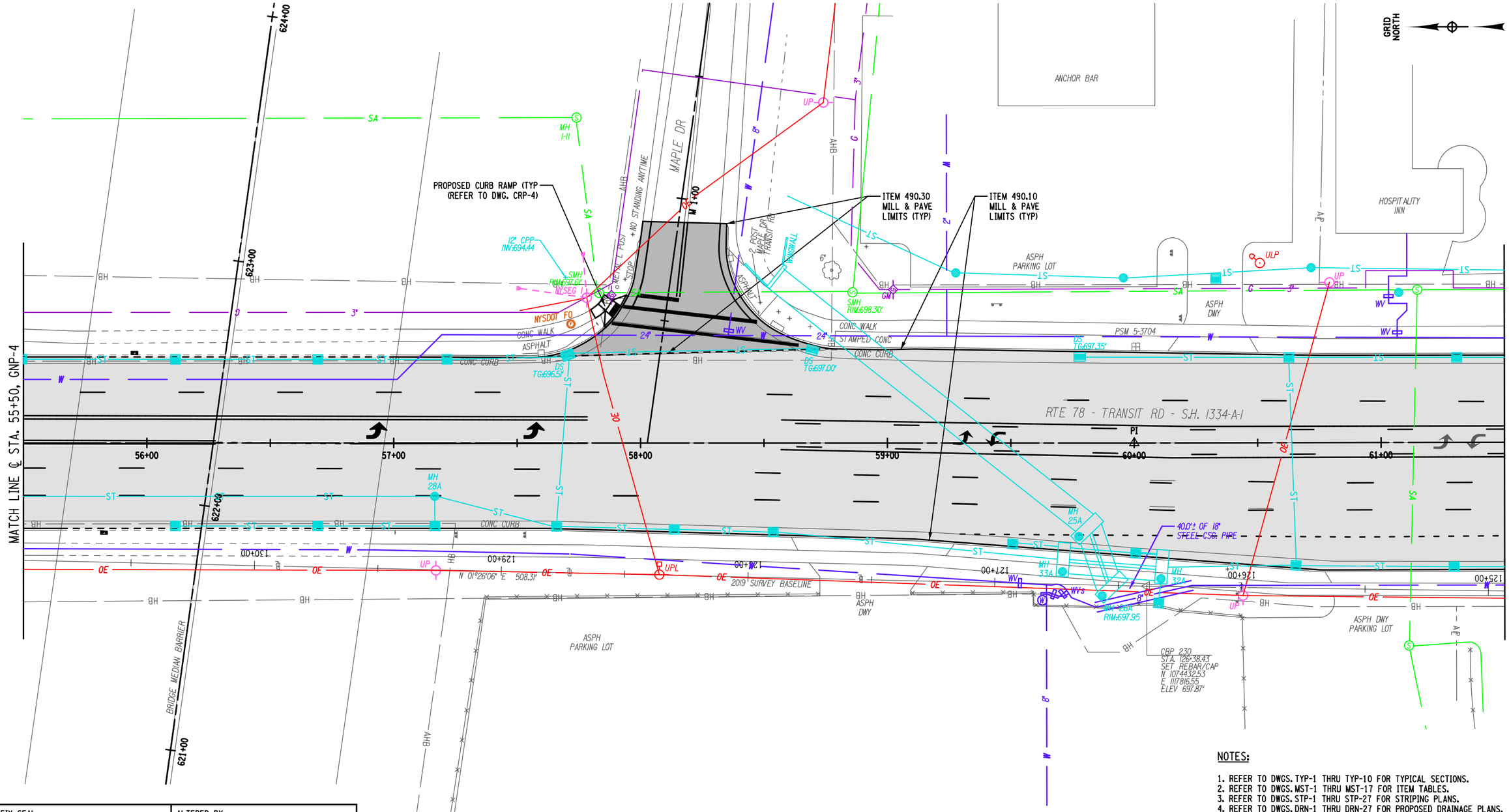

NOTES:

1. REFER TO DWGS. TYP-1 THRU TYP-10 FOR TYPICAL SECTIONS.
2. REFER TO DWGS. MST-1 THRU MST-17 FOR ITEM TABLES.
3. REFER TO DWGS. STP-1 THRU STP-27 FOR STRIPING PLANS.
4. REFER TO DWGS. DRN-1 THRU DRN-27 FOR PROPOSED DRAINAGE PLANS.

ITEM SUMMARY:

ITEM 490.10 - PRODUCTION COLD MILLING OF BITUMINOUS CONCRETE (SY)
ITEM 490.30 - MISCELLANEOUS COLD MILLING OF BITUMINOUS CONCRETE (SY)

AFFIX SEAL:
ON:

D264571
STATE OF NEW YORK
ROBERT F. SCHALLER
NO. 082465
LICENSED PROFESSIONAL ENGINEER

ALTERED BY:
ON:

AS-BUILT REVISIONS
DESCRIPTION OF ALTERATIONS:

NY 78, TRANSIT ROAD, S.H. 1334A-1	PIN 5813.61 NY 78 UTILITY QUALITY LEVEL D	BRIDGES	CULVERTS	ALL DIMENSIONS IN ft UNLESS OTHERWISE NOTED	CONTRACT NUMBER D264571
FRENCH ROAD TO WEHRLE DRIVE				GENERAL PLANS STA. 55+50 TO STA. 61+50	DRAWING NO. GNP-5
TOWNS OF CHEEKTOWAGA & LANCASTER					SHEET NO. 103
VILLAGE OF DEPEW					
COUNTY: ERIE REGION: 05					

IT IS A VIOLATION OF LAW FOR ANY PERSON, UNLESS THEY ARE ACTING UNDER THE DIRECTION OF A LICENSED PROFESSIONAL ENGINEER, ARCHITECT, LANDSCAPE ARCHITECT, OR LAND SURVEYOR, TO ALTER AN ITEM IN ANY WAY. IF AN ITEM BEARING THE STAMP OF A LICENSED PROFESSIONAL IS ALTERED, THE ALTERING ENGINEER, ARCHITECT, LANDSCAPE ARCHITECT, OR LAND SURVEYOR SHALL STAMP THE DOCUMENT AND INCLUDE THE NOTATION "ALTERED BY" FOLLOWED BY THEIR SIGNATURE, THE DATE OF SUCH ALTERATION, AND A SPECIFIC DESCRIPTION OF THE ALTERATION.

NEW YORK STATE OF OPPORTUNITY. Department of Transportation

PROJECT MANAGER S. S. VAIDYA
CHECK R. F. SCHALLER
DRAFTING C. L. CRITES
CHECK R. F. SCHALLER
DESIGN C. L. CRITES
JOB MANAGER R. F. SCHALLER
DESIGN SUPERVISOR S. S. VAIDYA
FILE NAME = 581361_CPH_HWY_GNP-5.dgn
DATE/TIME = 22-JUN-2021 12:40
USER = cartes

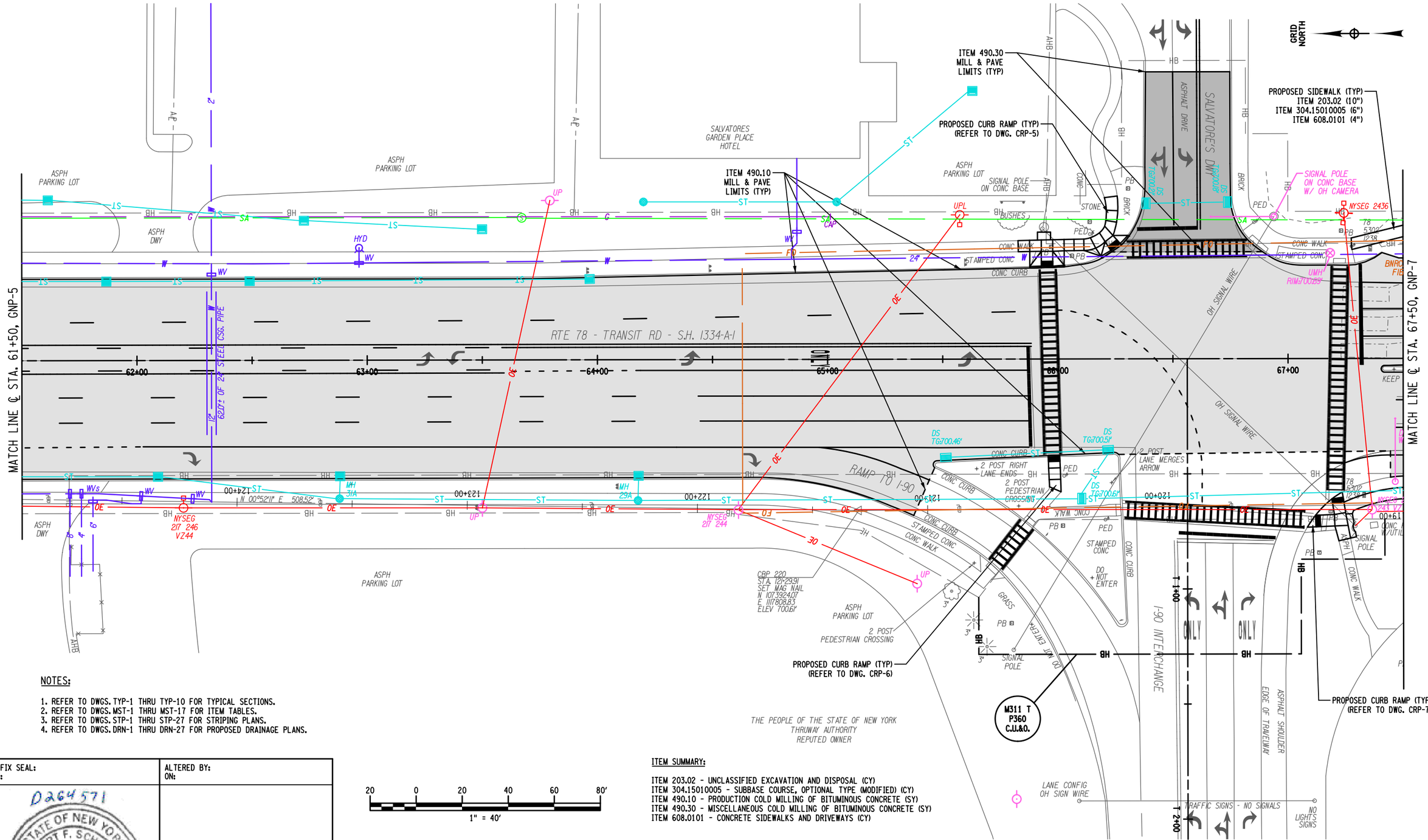

NOTES:

1. REFER TO DWGS. TYP-1 THRU TYP-10 FOR TYPICAL SECTIONS.
2. REFER TO DWGS. MST-1 THRU MST-17 FOR ITEM TABLES.
3. REFER TO DWGS. STP-1 THRU STP-27 FOR STRIPING PLANS.
4. REFER TO DWGS. DRN-1 THRU DRN-27 FOR PROPOSED DRAINAGE PLANS.

ITEM SUMMARY:

ITEM 203.02 - UNCLASSIFIED EXCAVATION AND DISPOSAL (CY)
ITEM 304.15010005 - SUBBASE COURSE, OPTIONAL TYPE (MODIFIED) (CY)
ITEM 490.10 - PRODUCTION COLD MILLING OF BITUMINOUS CONCRETE (SY)
ITEM 490.30 - MISCELLANEOUS COLD MILLING OF BITUMINOUS CONCRETE (SY)
ITEM 608.0101 - CONCRETE SIDEWALKS AND DRIVEWAYS (CY)

AFFIX SEAL:
ON:

D264571
STATE OF NEW YORK
ROBERT F. SCHALLER
NO. 082463
LICENSED PROFESSIONAL ENGINEER

ALTERED BY:
ON:

AS-BUILT REVISIONS
DESCRIPTION OF ALTERATIONS:

NY 78, TRANSIT ROAD, S.H. 1334A-1
FRENCH ROAD TO WEHRLE DRIVE
TOWNS OF CHEEKTOWAGA & LANCASTER
VILLAGE OF DEPEW
COUNTY: ERIE REGION: 05

PIN 5813.61
NY 78
UTILITY QUALITY LEVEL D

BRIDGES

CULVERTS

ALL DIMENSIONS IN ft UNLESS OTHERWISE NOTED

GENERAL PLANS
STA. 61+50 TO 67+50

CONTRACT NUMBER
D264571

DRAWING NO. GNP-6
SHEET NO. 104

IT IS A VIOLATION OF LAW FOR ANY PERSON, UNLESS THEY ARE ACTING UNDER THE DIRECTION OF A LICENSED PROFESSIONAL ENGINEER, ARCHITECT, LANDSCAPE ARCHITECT, OR LAND SURVEYOR, TO ALTER AN ITEM IN ANY WAY. IF AN ITEM BEARING THE STAMP OF A LICENSED PROFESSIONAL IS ALTERED, THE ALTERING ENGINEER, ARCHITECT, LANDSCAPE ARCHITECT, OR LAND SURVEYOR SHALL STAMP THE DOCUMENT AND INCLUDE THE NOTATION "ALTERED BY" FOLLOWED BY THEIR SIGNATURE, THE DATE OF SUCH ALTERATION, AND A SPECIFIC DESCRIPTION OF THE ALTERATION.

NEW YORK STATE OF OPPORTUNITY. Department of Transportation

PROJECT MANAGER S. S. VAIDYA
CHECK R. F. SCHALLER
DRAFTING C. L. CRITES
CHECK R. F. SCHALLER
DESIGN C. L. CRITES
JOB MANAGER R. F. SCHALLER
DESIGN SUPERVISOR S. S. VAIDYA

FILE NAME = 581361_CPH_HWY_GNP-6.dgn
DATE/TIME = 22-JUN-2021 12:40
USER = cortes

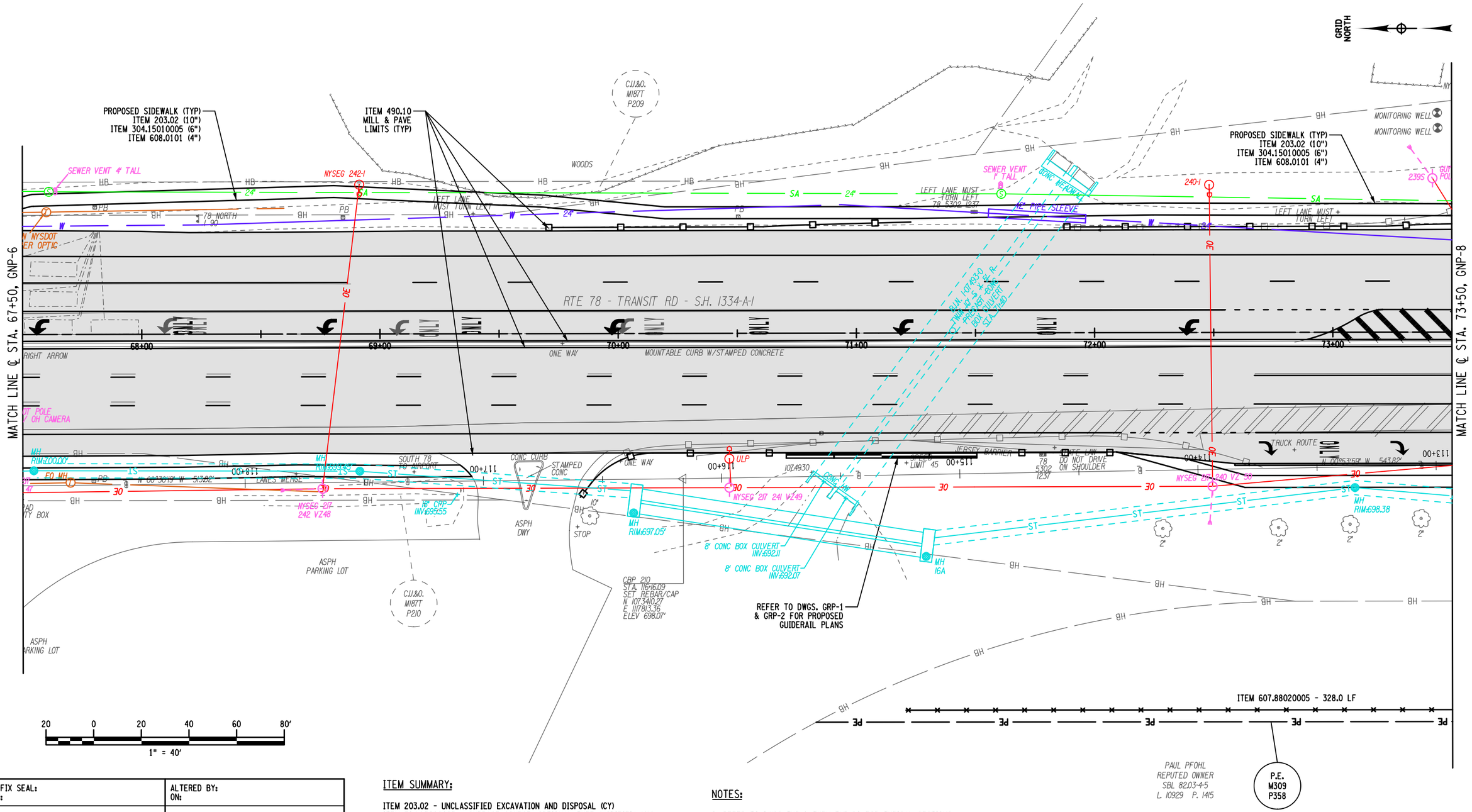

PROJECT MANAGER S. S. VAIDYA
CHECK R. F. SCHALLER
DRAFTING C. L. CRITES
CHECK R. F. SCHALLER
DESIGN C. L. CRITES
JOB MANAGER R. F. SCHALLER
DESIGN SUPERVISOR S. S. VAIDYA

FILE NAME = 581361_CPH_HWY_GNP-7.dgn
DATE/TIME = 22-JUN-2021 12:40
USER = corites

AFFIX SEAL: ON:	ALTERED BY: ON:
D264571 STATE OF NEW YORK ROBERT F. SCHALLER NO. 082465 LICENSED PROFESSIONAL ENGINEER	

ITEM SUMMARY:

ITEM 203.02 - UNCLASSIFIED EXCAVATION AND DISPOSAL (CY)
ITEM 304.15010005 - SUBBASE COURSE, OPTIONAL TYPE (MODIFIED) (CY)
ITEM 490.10 - PRODUCTION COLD MILLING OF BITUMINOUS CONCRETE (SY)
ITEM 607.88020005 - PORTABLE SNOW FENCE, 8 FOOT HEIGHT (LF)
ITEM 608.0101 - CONCRETE SIDEWALKS & DRIVEWAYS (CY)

NOTES:

1. REFER TO DWGS. TYP-1 THRU TYP-10 FOR TYPICAL SECTIONS.
2. REFER TO DWGS. MST-1 THRU MST-17 FOR ITEM TABLES.
3. REFER TO DWGS. STP-1 THRU STP-27 FOR STRIPING PLANS.
4. REFER TO DWGS. DRN-1 THRU DRN-27 FOR PROPOSED DRAINAGE PLANS.

AS-BUILT REVISIONS DESCRIPTION OF ALTERATIONS:	NY 78, TRANSIT ROAD, S.H. 1334A-1	PIN 5813.61	BRIDGES	CULVERTS	ALL DIMENSIONS IN ft UNLESS OTHERWISE NOTED	CONTRACT NUMBER
	FRENCH ROAD TO WEHRLE DRIVE	NY 78			GENERAL PLANS STA. 67+50 TO STA. 73+50	D264571
	TOWNS OF CHEEKTOWAGA & LANCASTER	UTILITY QUALITY LEVEL D				
	VILLAGE OF DEPEW					DRAWING NO. GNP-7
	COUNTY: ERIE REGION: 05					SHEET NO. 105

IT IS A VIOLATION OF LAW FOR ANY PERSON, UNLESS THEY ARE ACTING UNDER THE DIRECTION OF A LICENSED PROFESSIONAL ENGINEER, ARCHITECT, LANDSCAPE ARCHITECT, OR LAND SURVEYOR, TO ALTER AN ITEM IN ANY WAY. IF AN ITEM BEARING THE STAMP OF A LICENSED PROFESSIONAL IS ALTERED, THE ALTERING ENGINEER, ARCHITECT, LANDSCAPE ARCHITECT, OR LAND SURVEYOR SHALL STAMP THE DOCUMENT AND INCLUDE THE NOTATION "ALTERED BY" FOLLOWED BY THEIR SIGNATURE, THE DATE OF SUCH ALTERATION, AND A SPECIFIC DESCRIPTION OF THE ALTERATION.

NEW YORK STATE OF OPPORTUNITY. Department of Transportation

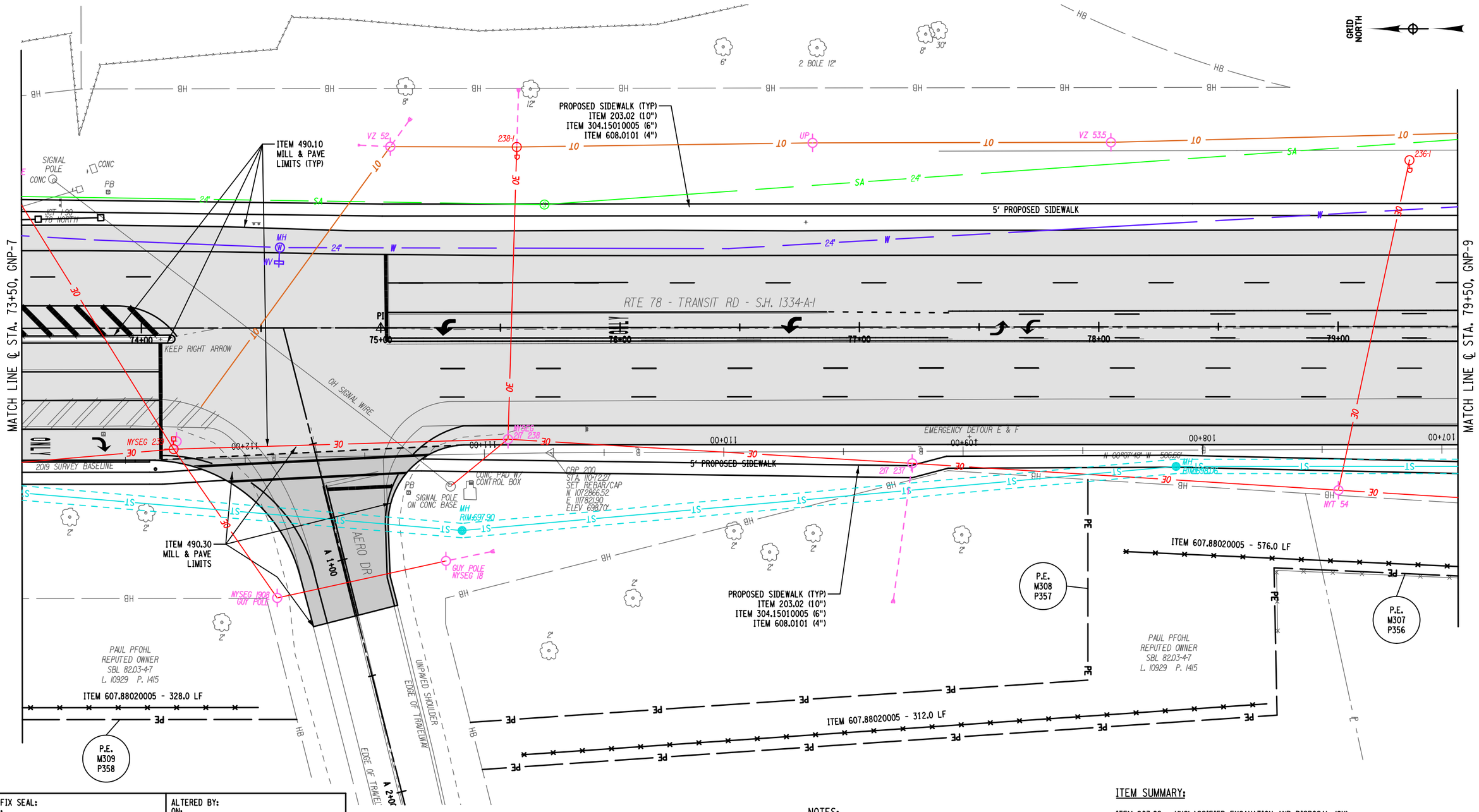

AFFIX SEAL:
ON:

ALTERED BY:
ON:

D264571

STATE OF NEW YORK · ROBERT F. SCHALLER · NO. 082465 · LICENSED PROFESSIONAL ENGINEER

NOTES:

1. REFER TO DWGS. TYP-1 THRU TYP-10 FOR TYPICAL SECTIONS.
2. REFER TO DWGS. MST-1 THRU MST-17 FOR ITEM TABLES.
2. REFER TO DWGS. STP-1 THRU STP-27 FOR STRIPING PLANS.
4. REFER TO DWGS. DRN-1 THRU DRN-27 FOR PROPOSED DRAINAGE PLANS.

ITEM SUMMARY:

ITEM 203.02 - UNCLASSIFIED EXCAVATION AND DISPOSAL (CY)
ITEM 304.15010005 - SUBBASE COURSE, OPTIONAL TYPE (MODIFIED) (CY)
ITEM 490.10 - PRODUCTION COLD MILLING OF BITUMINOUS CONCRETE (SY)
ITEM 490.30 - MISCELLANEOUS COLD MILLING OF BITUMINOUS CONCRETE (SY)
ITEM 607.88020005 - PORTABLE SNOW FENCE, 8 FOOT HEIGHT (LF)
ITEM 608.0101 - CONCRETE SIDEWALKS & DRIVEWAYS (CY)

AS-BUILT REVISIONS
DESCRIPTION OF ALTERATIONS:

NY 78, TRANSIT ROAD, S.H. 1334A-1	PIN 5813.61	BRIDGES	CULVERTS	ALL DIMENSIONS IN ft UNLESS OTHERWISE NOTED	CONTRACT NUMBER
FRENCH ROAD TO WEHRLE DRIVE	NY 78			GENERAL PLANS	D264571
TOWNS OF CHEEKTOWAGA & LANCASTER	UTILITY QUALITY LEVEL D			STA. 73+50 TO STA. 79+50	DRAWING NO. GNP-8
VILLAGE OF DEPEW					SHEET NO. 106
COUNTY: ERIE REGION: 05					

IT IS A VIOLATION OF LAW FOR ANY PERSON, UNLESS THEY ARE ACTING UNDER THE DIRECTION OF A LICENSED PROFESSIONAL ENGINEER, ARCHITECT, LANDSCAPE ARCHITECT, OR LAND SURVEYOR, TO ALTER AN ITEM IN ANY WAY. IF AN ITEM BEARING THE STAMP OF A LICENSED PROFESSIONAL IS ALTERED, THE ALTERING ENGINEER, ARCHITECT, LANDSCAPE ARCHITECT, OR LAND SURVEYOR SHALL STAMP THE DOCUMENT AND INCLUDE THE NOTATION "ALTERED BY" FOLLOWED BY THEIR SIGNATURE, THE DATE OF SUCH ALTERATION, AND A SPECIFIC DESCRIPTION OF THE ALTERATION.

NEW YORK STATE OF OPPORTUNITY. Department of Transportation

PROJECT MANAGER S. S. VAIDYA
CHECK R. F. SCHALLER
DRAFTING C. L. CRITES
CHECK R. F. SCHALLER
DESIGN C. L. CRITES
JOB MANAGER R. F. SCHALLER
DESIGN SUPERVISOR S. S. VAIDYA

FILE NAME = 581361_CPH_HWY_GNP-8.dgn
DATE/TIME = 22-JUN-2021 12:40
USER = cc rites

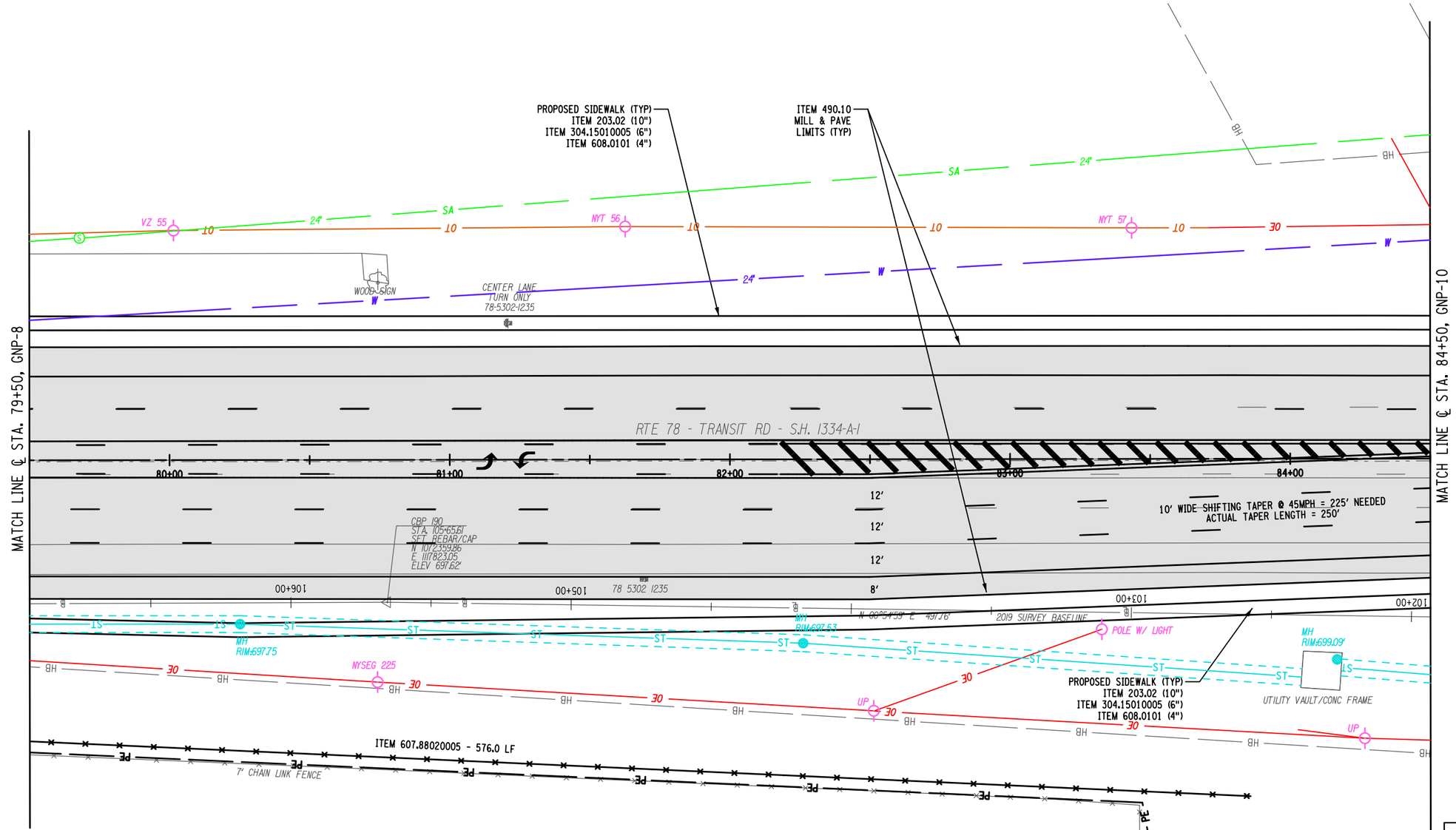

NOTES:

1. REFER TO DWGS. TYP-1 THRU TYP-10 FOR TYPICAL SECTIONS.
2. REFER TO DWGS. MST-1 THRU MST-17 FOR ITEM TABLES.
2. REFER TO DWGS. STP-1 THRU STP-27 FOR STRIPING PLANS.
4. REFER TO DWGS. DRN-1 THRU DRN-27 FOR PROPOSED DRAINAGE PLANS.

ITEM SUMMARY:

ITEM 203.02 - UNCLASSIFIED EXCAVATION AND DISPOSAL (CY)
ITEM 304.15010005 - SUBBASE COURSE, OPTIONAL TYPE (MODIFIED) (CY)
ITEM 490.10 - PRODUCTION COLD MILLING OF BITUMINOUS CONCRETE (SY)
ITEM 607.88020005 - PORTABLE SNOW FENCE, 8 FOOT HEIGHT (LF)
ITEM 608.0101 - CONCRETE SIDEWALKS & DRIVEWAYS (CY)

20 0 20 40 60 80'
1" = 40'

LANDSCAPE / ENV. LEGEND:

- ITEM 614.06XXXX TREE REMOVAL REFER TO LAT-3
- ITEM 611.0151 PLANTING MAJOR DECIDUOUS TREES 2" CALIPER REFER TO LAT-1 AND LAT-2
- ITEM 611.13 TRANSPLANT TREE OVER 3" TO 12" DBH REFER TO LAT-1 AND LAT-2
- ITEM 614.08 VERTICAL MULCHING REFER TO LAT-1 AND LAT-2

AFFIX SEAL:
ON:

D264571
STATE OF NEW YORK
ROBERT F. SCHALLER
NO. 082465
LICENSED PROFESSIONAL ENGINEER

ALTERED BY:
ON:

AS-BUILT REVISIONS
DESCRIPTION OF ALTERATIONS:

NY 78, TRANSIT ROAD, S.H. 1334A-1
FRENCH ROAD TO WEHRLE DRIVE
TOWNS OF CHEEKTOWAGA & LANCASTER
VILLAGE OF DEPEW
COUNTY: ERIE REGION: 05

PIN 5813.61
NY 78
UTILITY QUALITY LEVEL D

BRIDGES

CULVERTS

ALL DIMENSIONS IN ft UNLESS OTHERWISE NOTED

GENERAL PLANS
STA. 79+50 TO STA. 84+50

CONTRACT NUMBER
D264571

DRAWING NO. GNP-9
SHEET NO. 107

IT IS A VIOLATION OF LAW FOR ANY PERSON, UNLESS THEY ARE ACTING UNDER THE DIRECTION OF A LICENSED PROFESSIONAL ENGINEER, ARCHITECT, LANDSCAPE ARCHITECT, OR LAND SURVEYOR, TO ALTER AN ITEM IN ANY WAY. IF AN ITEM BEARING THE STAMP OF A LICENSED PROFESSIONAL IS ALTERED, THE ALTERING ENGINEER, ARCHITECT, LANDSCAPE ARCHITECT, OR LAND SURVEYOR SHALL STAMP THE DOCUMENT AND INCLUDE THE NOTATION "ALTERED BY" FOLLOWED BY THEIR SIGNATURE, THE DATE OF SUCH ALTERATION, AND A SPECIFIC DESCRIPTION OF THE ALTERATION.

NEW YORK STATE OF OPPORTUNITY. Department of Transportation

PROJECT MANAGER S. S. VAIDYA
CHECK R. F. SCHALLER
DRAFTING C. L. CRITES
CHECK R. F. SCHALLER
DESIGN C. L. CRITES
JOB MANAGER R. F. SCHALLER
DESIGN SUPERVISOR S. S. VAIDYA
FILE NAME = 581361_CPH_HWY_GNP-9.dgn
DATE/TIME = 22-JUN-2021 12:40
USER = ccrites

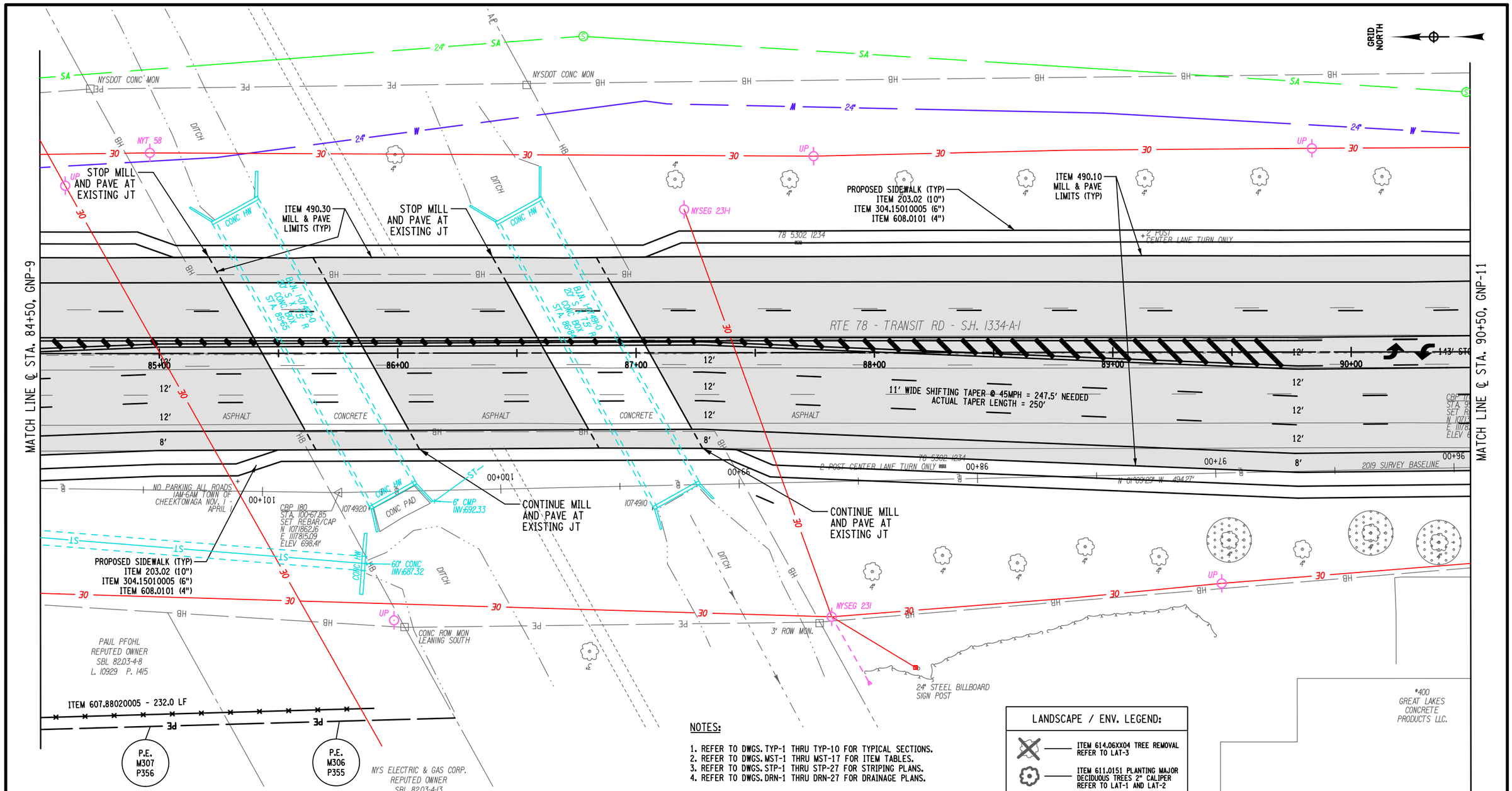

NOTES:

1. REFER TO DWGS. TYP-1 THRU TYP-10 FOR TYPICAL SECTIONS.
2. REFER TO DWGS. MST-1 THRU MST-17 FOR ITEM TABLES.
3. REFER TO DWGS. STP-1 THRU STP-27 FOR STRIPING PLANS.
4. REFER TO DWGS. DRN-1 THRU DRN-27 FOR DRAINAGE PLANS.

ITEM SUMMARY:

ITEM 203.02 - UNCLASSIFIED EXCAVATION AND DISPOSAL (CY)
ITEM 304.15010005 - SUBBASE COURSE, OPTIONAL TYPE (MODFIED) (CY)
ITEM 490.10 - PRODUCTION COLD MILLING OF BITUMINOUS CONCRETE (SY)
ITEM 490.30 - MISCELLANEOUS COLD MILLING OF BITUMINOUS CONCRETE (SY)
ITEM 607.88020005 - PORTABLE SNOW FENCE, 8 FOOT HEIGHT (LF)
ITEM 608.0101 - CONCRETE SIDEWALKS & DRIVEWAYS (CY)

LANDSCAPE / ENV. LEGEND:

- ITEM 614.06XX04 TREE REMOVAL REFER TO LAT-3
- ITEM 611.0151 PLANTING MAJOR DECIDUOUS TREES 2" CALIPER REFER TO LAT-1 AND LAT-2
- ITEM 611.13 TRANSPLANT TREE OVER 3" TO 12" DBH REFER TO LAT-1 AND LAT-2
- ITEM 614.08 VERTICAL MULCHING REFER TO LAT-1 AND LAT-2

AFFIX SEAL:
ON:

D264571
STATE OF NEW YORK
ROBERT F. SCHALLER
NO. 082465
LICENSED PROFESSIONAL ENGINEER

ALTERED BY:
ON:

AS-BUILT REVISIONS
DESCRIPTION OF ALTERATIONS:

NY 78, TRANSIT ROAD, S.H. 1334A-1	PIN 5813.61	BRIDGES	CULVERTS	ALL DIMENSIONS IN ft UNLESS OTHERWISE NOTED	CONTRACT NUMBER D264571
FRENCH ROAD TO WEHRLE DRIVE	NY 78			GENERAL PLANS STA. 84+50 TO STA. 90+50	DRAWING NO. GNP-10
TOWNS OF CHEEKTOWAGA & LANCASTER	UTILITY QUALITY LEVEL D				SHEET NO. 108
VILLAGE OF DEPEW					
COUNTY: ERIE REGION: 05					

IT IS A VIOLATION OF LAW FOR ANY PERSON, UNLESS THEY ARE ACTING UNDER THE DIRECTION OF A LICENSED PROFESSIONAL ENGINEER, ARCHITECT, LANDSCAPE ARCHITECT, OR LAND SURVEYOR, TO ALTER AN ITEM IN ANY WAY. IF AN ITEM BEARING THE STAMP OF A LICENSED PROFESSIONAL IS ALTERED, THE ALTERING ENGINEER, ARCHITECT, LANDSCAPE ARCHITECT, OR LAND SURVEYOR SHALL STAMP THE DOCUMENT AND INCLUDE THE NOTATION "ALTERED BY" FOLLOWED BY THEIR SIGNATURE, THE DATE OF SUCH ALTERATION, AND A SPECIFIC DESCRIPTION OF THE ALTERATION.

NEW YORK STATE OF OPPORTUNITY. Department of Transportation

PROJECT MANAGER S. S. VAIDYA
CHECK R. F. SCHALLER
DRAFTING C. L. CRITES
DESIGN C. L. CRITES
JOB MANAGER R. F. SCHALLER
DESIGN SUPERVISOR S. S. VAIDYA
FILE NAME = 581361_CPH_HWY_GNP-10.dgn
DATE/TIME = 22-JUN-2021 12:40
USER = cortes

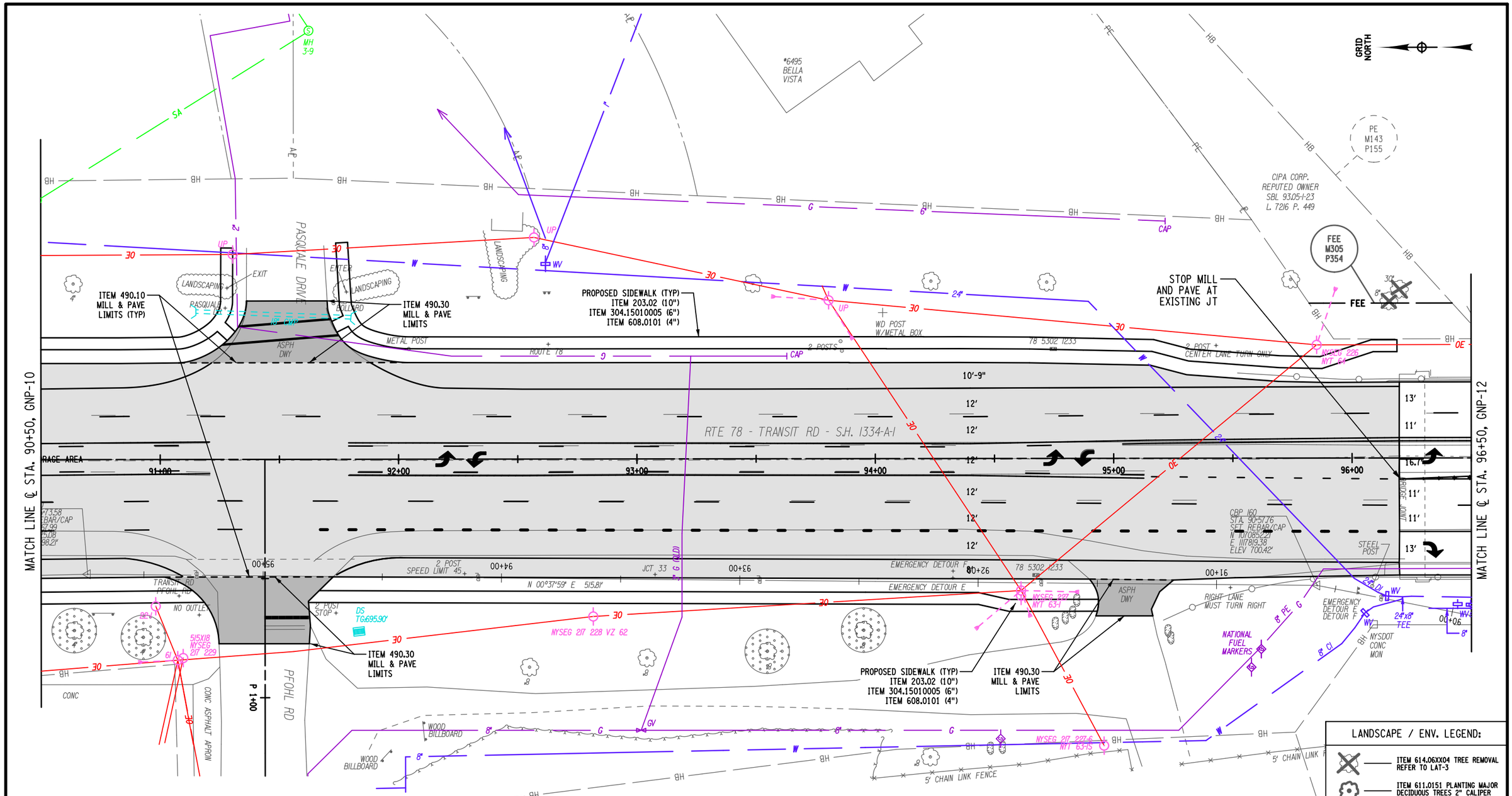

ITEM SUMMARY:

ITEM 203.02 - UNCLASSIFIED EXCAVATION AND DISPOSAL (CY)
ITEM 304.15010005 - SUBBASE COURSE, OPTIONAL TYPE (MODIFIED) (CY)
ITEM 490.10 - PRODUCTION COLD MILLING OF BITUMINOUS CONCRETE (SY)
ITEM 490.30 - MISCELLANEOUS COLD MILLING OF BITUMINOUS CONCRETE (SY)
ITEM 608.0101 - CONCRETE SIDEWALKS & DRIVEWAYS (CY)

NOTES:

1. REFER TO DWGS. TYP-1 THRU TYP-10 FOR TYPICAL SECTIONS.
2. REFER TO DWGS. MST-1 THRU MST-17 FOR ITEM TABLES.
3. REFER TO DWGS. STP-1 THRU STP-27 FOR STRIPING PLANS.
4. REFER TO DWGS. DRN-1 THRU DRN-27 FOR DRAINAGE PLANS.

LANDSCAPE / ENV. LEGEND:

- ITEM 614.06XX04 TREE REMOVAL REFER TO LAT-3
- ITEM 611.0151 PLANTING MAJOR DECIDUOUS TREES 2" CALIPER REFER TO LAT-1 AND LAT-2
- ITEM 611.13 TRANSPLANT TREE OVER 3" TO 12" DBH REFER TO LAT-1 AND LAT-2
- ITEM 614.08 VERTICAL MULCHING REFER TO LAT-1 AND LAT-2

AFFIX SEAL:
ON:

D264571

STATE OF NEW YORK · ROBERT F. SCHALLER · LICENSED PROFESSIONAL ENGINEER · NO. 082465

ALTERED BY:
ON:

AS-BUILT REVISIONS
DESCRIPTION OF ALTERATIONS:

NY 78, TRANSIT ROAD, S.H. 1334A-1	PIN 5813.61	BRIDGES	CULVERTS	ALL DIMENSIONS IN ft UNLESS OTHERWISE NOTED
FRENCH ROAD TO WEHRLE DRIVE	NY 78			GENERAL PLANS
TOWNS OF CHEEKTOWAGA & LANCASTER	UTILITY QUALITY LEVEL D			STA. 90+50 TO STA. 96+50
VILLAGE OF DEPEW				
COUNTY: ERIE REGION: 05				

CONTRACT NUMBER
D264571

DRAWING NO. GNP-11
SHEET NO. 109

IT IS A VIOLATION OF LAW FOR ANY PERSON, UNLESS THEY ARE ACTING UNDER THE DIRECTION OF A LICENSED PROFESSIONAL ENGINEER, ARCHITECT, LANDSCAPE ARCHITECT, OR LAND SURVEYOR, TO ALTER AN ITEM IN ANY WAY. IF AN ITEM BEARING THE STAMP OF A LICENSED PROFESSIONAL IS ALTERED, THE ALTERING ENGINEER, ARCHITECT, LANDSCAPE ARCHITECT, OR LAND SURVEYOR SHALL STAMP THE DOCUMENT AND INCLUDE THE NOTATION "ALTERED BY" FOLLOWED BY THEIR SIGNATURE, THE DATE OF SUCH ALTERATION, AND A SPECIFIC DESCRIPTION OF THE ALTERATION.

NEW YORK STATE OF OPPORTUNITY. Department of Transportation

PROJECT MANAGER S. S. VAIDYA
CHECK R. F. SCHALLER
DRAFTING C. L. CRITES
CHECK R. F. SCHALLER
DESIGN C. L. CRITES
JOB MANAGER R. F. SCHALLER
DESIGN SUPERVISOR S. S. VAIDYA
FILE NAME = 581361_CPH_HWY_GNP-11.dgn
DATE/TIME = 22-JUN-2021 12:40
USER = cartes

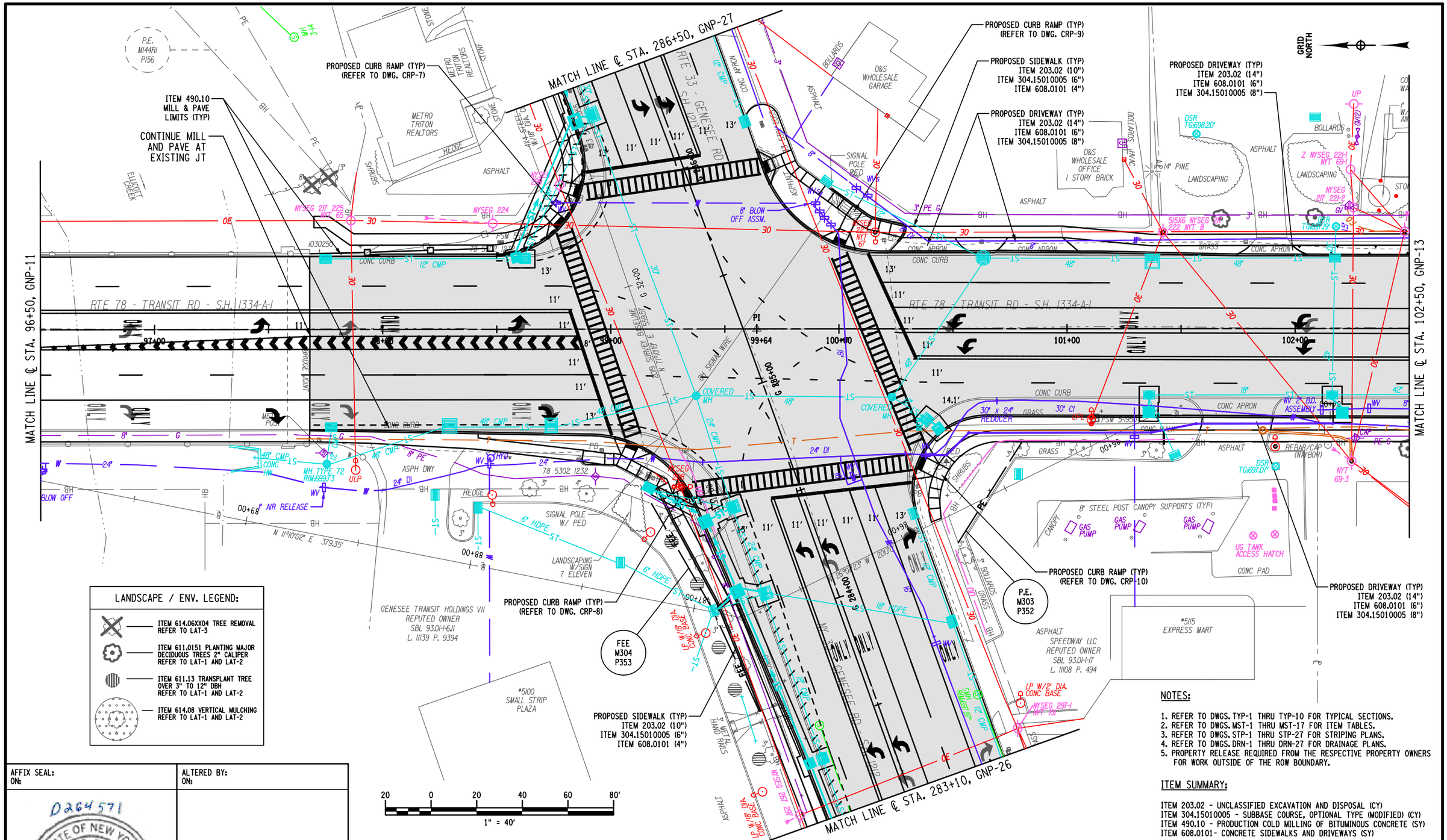

NOTES:

1. REFER TO DWGS. TYP-1 THRU TYP-10 FOR TYPICAL SECTIONS.
2. REFER TO DWGS. MST-1 THRU MST-17 FOR ITEM TABLES.
3. REFER TO DWGS. STP-1 THRU STP-27 FOR STRIPING PLANS.
4. REFER TO DWGS. DRN-1 THRU DRN-27 FOR DRAINAGE PLANS.
5. PROPERTY RELEASE REQUIRED FROM THE RESPECTIVE PROPERTY OWNERS FOR WORK OUTSIDE OF THE ROW BOUNDARY.

ITEM SUMMARY:

ITEM 203.02 - UNCLASSIFIED EXCAVATION AND DISPOSAL (CY)
ITEM 304.15010005 - SUBBASE COURSE, OPTIONAL TYPE (MODIFIED) (CY)
ITEM 490.10 - PRODUCTION COLD MILLING OF BITUMINOUS CONCRETE (SY)
ITEM 608.0101- CONCRETE SIDEWALKS AND DRIVEWAYS (SY)

AFFIX SEAL:
ON:

D264571
STATE OF NEW YORK
ROBERT F. SCHALLER
NO. 082465
LICENSED PROFESSIONAL ENGINEER

ALTERED BY:
ON:

AS-BUILT REVISIONS
DESCRIPTION OF ALTERATIONS:

NY 78, TRANSIT ROAD, S.H. 1334A-1
FRENCH ROAD TO WEHRLE DRIVE
TOWNS OF CHEEKTOWAGA & LANCASTER
VILLAGE OF DEPEW
COUNTY: ERIE REGION: 05

PIN 5813.61
NY 78
UTILITY QUALITY LEVEL D

BRIDGES

CULVERTS

ALL DIMENSIONS IN ft UNLESS OTHERWISE NOTED

GENERAL PLANS
STA. 96+50 TO STA. 102+50

CONTRACT NUMBER
D264571

DRAWING NO. GNP-12
SHEET NO. 110

IT IS A VIOLATION OF LAW FOR ANY PERSON, UNLESS THEY ARE ACTING UNDER THE DIRECTION OF A LICENSED PROFESSIONAL ENGINEER, ARCHITECT, LANDSCAPE ARCHITECT, OR LAND SURVEYOR, TO ALTER AN ITEM IN ANY WAY. IF AN ITEM BEARING THE STAMP OF A LICENSED PROFESSIONAL IS ALTERED, THE ALTERING ENGINEER, ARCHITECT, LANDSCAPE ARCHITECT, OR LAND SURVEYOR SHALL STAMP THE DOCUMENT AND INCLUDE THE NOTATION "ALTERED BY" FOLLOWED BY THEIR SIGNATURE, THE DATE OF SUCH ALTERATION, AND A SPECIFIC DESCRIPTION OF THE ALTERATION.

NEW YORK STATE OF OPPORTUNITY. Department of Transportation

DESIGN SUPERVISOR S. S. VAIDYA | JOB MANAGER R. F. SCHALLER | DESIGN C. L. CRITES | CHECK R. F. SCHALLER | DRAFTING C. L. CRITES | CHECK R. F. SCHALLER | PROJECT MANAGER S. S. VAIDYA

FILE NAME = 581361_CPH_HWY_GNP-12.dgn
DATE/TIME = 22-JUN-2021 12:41
USER = corites

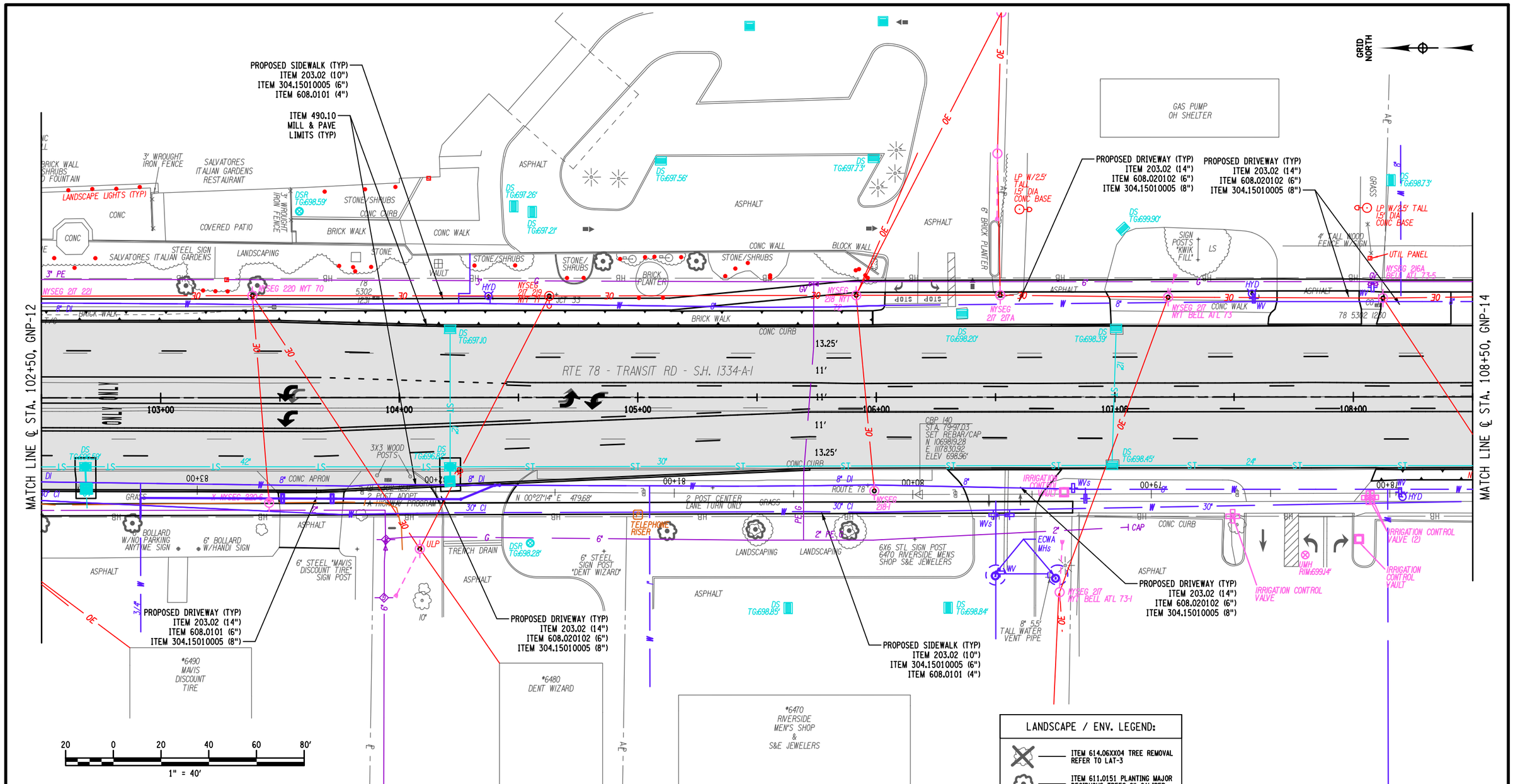

LANDSCAPE / ENV. LEGEND:

- ITEM 614.06XX04 TREE REMOVAL REFER TO LAT-3
- ITEM 611.0151 PLANTING MAJOR DECIDUOUS TREES 2" CALIPER REFER TO LAT-1 AND LAT-2
- ITEM 611.13 TRANSPLANT TREE OVER 3" TO 12" DBH REFER TO LAT-1 AND LAT-2
- ITEM 614.08 VERTICAL MULCHING REFER TO LAT-1 AND LAT-2

NOTES:

1. REFER TO DWGS. TYP-1 THRU TYP-10 FOR TYPICAL SECTIONS.
2. REFER TO DWGS. MST-1 THRU MST-17 FOR ITEM TABLES.
3. REFER TO DWGS. STP-1 THRU STP-27 FOR STRIPING PLANS.
4. REFER TO DWGS. DRN-1 THRU DRN-27 FOR DRAINAGE PLANS.
5. PROPERTY RELEASE REQUIRED FROM THE RESPECTIVE PROPERTY OWNERS FOR WORK OUTSIDE OF THE ROW BOUNDARY.

ITEM SUMMARY:

ITEM 203.02 - UNCLASSIFIED EXCAVATION AND DISPOSAL (CY)
ITEM 304.15010005 - SUBBASE COURSE, OPTIONAL TYPE (MODIFIED) (CY)
ITEM 490.10 - PRODUCTION COLD MILLING OF BITUMINOUS CONCRETE (SY)
ITEM 608.0101 - CONCRETE SIDEWALKS AND DRIVEWAYS (CY)
ITEM 608.020102 - HMA SWK, DWY, BICYCLE PATHS & VEG CONTROL STRIPS (TON)

AFFIX SEAL:
ON:

ALTERED BY:
ON:

D264571
STATE OF NEW YORK
ROBERT F. SCHALLER
NO. 082465
LICENSED PROFESSIONAL ENGINEER

AS-BUILT REVISIONS
DESCRIPTION OF ALTERATIONS:

NY 78, TRANSIT ROAD, S.H. 1334A-1	PIN 5813.61	BRIDGES	CULVERTS	ALL DIMENSIONS IN ft UNLESS OTHERWISE NOTED
FRENCH ROAD TO WEHRLE DRIVE	NY 78			GENERAL PLANS STA. 102+50 TO STA. 108+50
TOWNS OF CHEEKTOWAGA & LANCASTER	UTILITY QUALITY LEVEL D			
VILLAGE OF DEPEW				
COUNTY: ERIE REGION: 05				

CONTRACT NUMBER D264571

DRAWING NO. GNP-13
SHEET NO. 111

IT IS A VIOLATION OF LAW FOR ANY PERSON, UNLESS THEY ARE ACTING UNDER THE DIRECTION OF A LICENSED PROFESSIONAL ENGINEER, ARCHITECT, LANDSCAPE ARCHITECT, OR LAND SURVEYOR, TO ALTER AN ITEM IN ANY WAY. IF AN ITEM BEARING THE STAMP OF A LICENSED PROFESSIONAL IS ALTERED, THE ALTERING ENGINEER, ARCHITECT, LANDSCAPE ARCHITECT, OR LAND SURVEYOR SHALL STAMP THE DOCUMENT AND INCLUDE THE NOTATION "ALTERED BY" FOLLOWED BY THEIR SIGNATURE, THE DATE OF SUCH ALTERATION, AND A SPECIFIC DESCRIPTION OF THE ALTERATION.

NEW YORK STATE OF OPPORTUNITY. Department of Transportation

PROJECT MANAGER S. S. VAIDYA
CHECK R. F. SCHALLER
DRAFTING C. L. CRITES
CHECK R. F. SCHALLER
DESIGN C. L. CRITES
JOB MANAGER R. F. SCHALLER
DESIGN SUPERVISOR S. S. VAIDYA
FILE NAME = 581361_CPH_HWY_GNP-13.dgn
DATE/TIME = 22-JUN-2021 12:41
USER = cortes

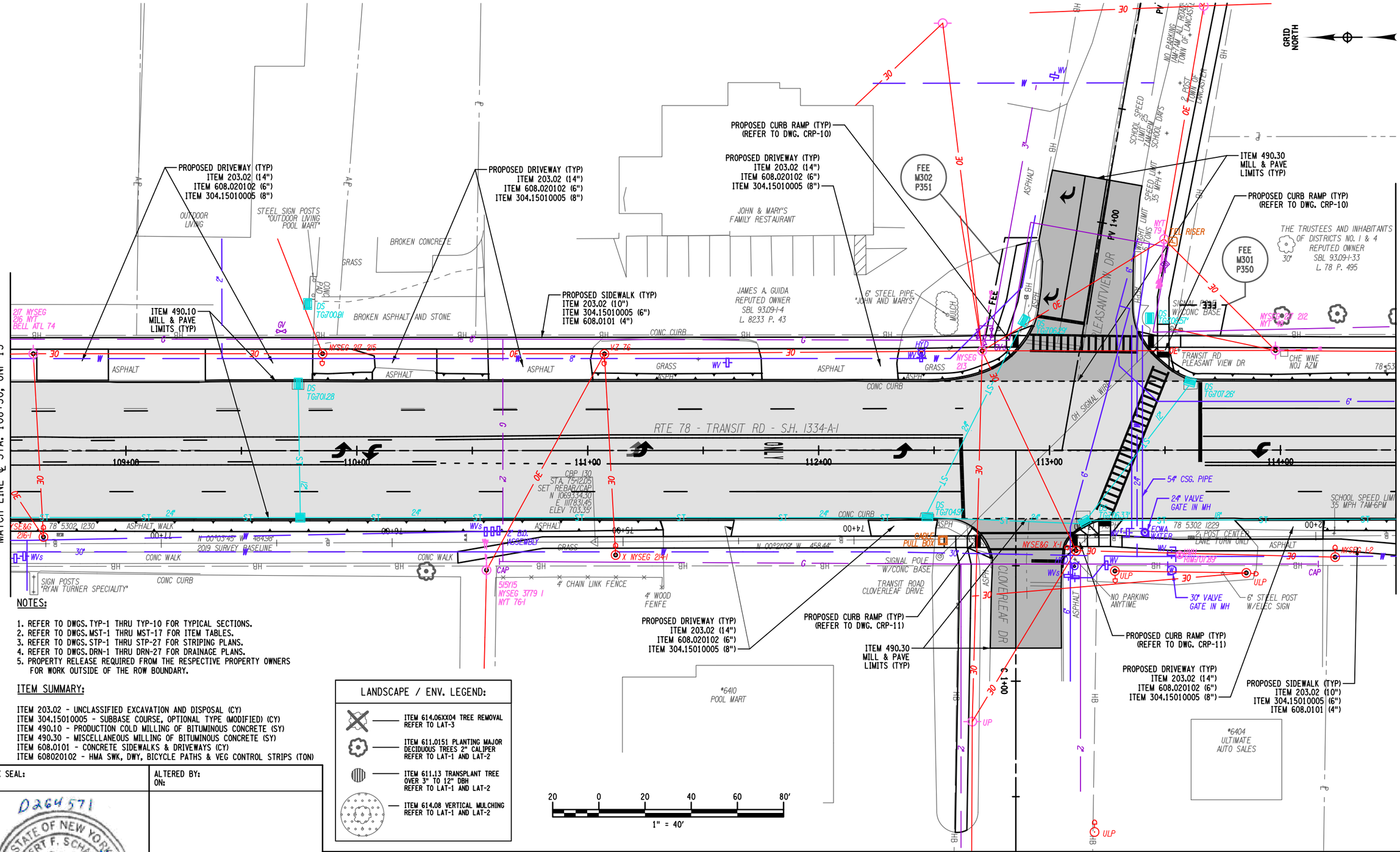

NOTES:

1. REFER TO DWGS. TYP-1 THRU TYP-10 FOR TYPICAL SECTIONS.
2. REFER TO DWGS. MST-1 THRU MST-17 FOR ITEM TABLES.
3. REFER TO DWGS. STP-1 THRU STP-27 FOR STRIPING PLANS.
4. REFER TO DWGS. DRN-1 THRU DRN-27 FOR DRAINAGE PLANS.
5. PROPERTY RELEASE REQUIRED FROM THE RESPECTIVE PROPERTY OWNERS FOR WORK OUTSIDE OF THE ROW BOUNDARY.

ITEM SUMMARY:

ITEM 203.02 - UNCLASSIFIED EXCAVATION AND DISPOSAL (CY)
ITEM 304.15010005 - SUBBASE COURSE, OPTIONAL TYPE (MODIFIED) (CY)
ITEM 490.10 - PRODUCTION COLD MILLING OF BITUMINOUS CONCRETE (SY)
ITEM 490.30 - MISCELLANEOUS MILLING OF BITUMINOUS CONCRETE (SY)
ITEM 608.0101 - CONCRETE SIDEWALKS & DRIVEWAYS (CY)
ITEM 608020102 - HMA SWK, DWY, BICYCLE PATHS & VEG CONTROL STRIPS (TON)

LANDSCAPE / ENV. LEGEND:

- ITEM 614.06XX04 TREE REMOVAL REFER TO LAT-3
- ITEM 611.0151 PLANTING MAJOR DECIDUOUS TREES 2" CALIPER REFER TO LAT-1 AND LAT-2
- ITEM 611.13 TRANSPLANT TREE OVER 3" TO 12" DBH REFER TO LAT-1 AND LAT-2
- ITEM 614.08 VERTICAL MULCHING REFER TO LAT-1 AND LAT-2

AFFIX SEAL:
ON:

ALTERED BY:
ON:

D264571
STATE OF NEW YORK
ROBERT F. SCHALLER
LICENSED PROFESSIONAL ENGINEER
NO. 082465

AS-BUILT REVISIONS
DESCRIPTION OF ALTERATIONS:

NY 78, TRANSIT ROAD, S.H. 1334A-1
FRENCH ROAD TO WEHRLE DRIVE
TOWNS OF CHEEKTOWAGA & LANCASTER
VILLAGE OF DEPEW
COUNTY: ERIE REGION: 05

PIN 5813.61
NY 78
UTILITY QUALITY LEVEL D

BRIDGES

CULVERTS

ALL DIMENSIONS IN ft UNLESS OTHERWISE NOTED

GENERAL PLANS
STA. 108+50 TO STA. 114+50

CONTRACT NUMBER
D264571

DRAWING NO. GNP-14
SHEET NO. 112

IT IS A VIOLATION OF LAW FOR ANY PERSON, UNLESS THEY ARE ACTING UNDER THE DIRECTION OF A LICENSED PROFESSIONAL ENGINEER, ARCHITECT, LANDSCAPE ARCHITECT, OR LAND SURVEYOR, TO ALTER AN ITEM IN ANY WAY. IF AN ITEM BEARING THE STAMP OF A LICENSED PROFESSIONAL IS ALTERED, THE ALTERING ENGINEER, ARCHITECT, LANDSCAPE ARCHITECT, OR LAND SURVEYOR SHALL STAMP THE DOCUMENT AND INCLUDE THE NOTATION "ALTERED BY" FOLLOWED BY THEIR SIGNATURE, THE DATE OF SUCH ALTERATION, AND A SPECIFIC DESCRIPTION OF THE ALTERATION.

NEW YORK STATE OF OPPORTUNITY. Department of Transportation

PROJECT MANAGER S. S. VAIDYA
CHECK R. F. SCHALLER
DRAFTING C. L. CRITES
CHECK R. F. SCHALLER
DESIGN C. L. CRITES
JOB MANAGER R. F. SCHALLER
DESIGN SUPERVISOR S. S. VAIDYA

FILE NAME = 581361_CPH_HWY_GNP-14.dgn
DATE/TIME = 22-JUN-2021 12:41
USER = cortes

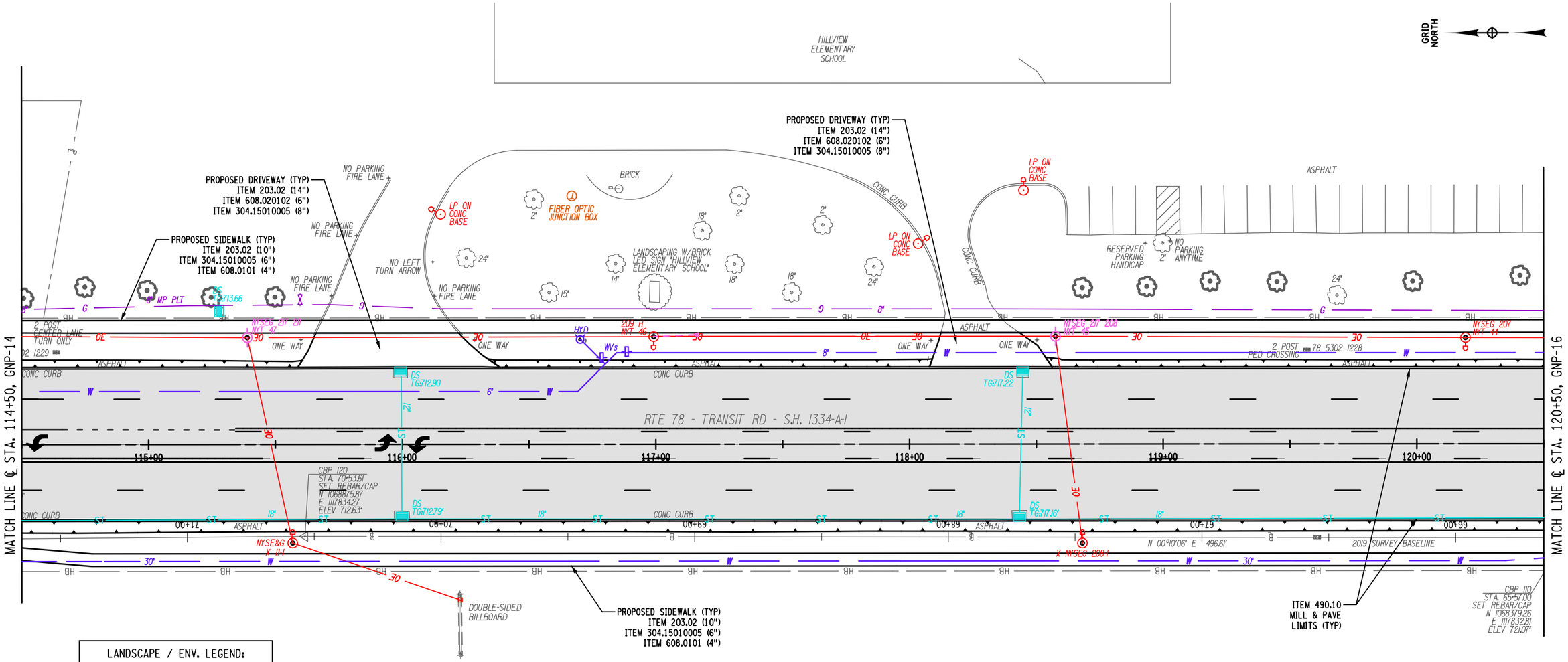

LANDSCAPE / ENV. LEGEND:

- ITEM 614.06XX04 TREE REMOVAL REFER TO LAT-3
- ITEM 611.0151 PLANTING MAJOR DECIDUOUS TREES 2" CALIPER REFER TO LAT-1 AND LAT-2
- ITEM 611.13 TRANSPLANT TREE OVER 3" TO 12" DBH REFER TO LAT-1 AND LAT-2
- ITEM 614.08 VERTICAL MULCHING REFER TO LAT-1 AND LAT-2

20 0 20 40 60 80'

1" = 40'

ITEM SUMMARY:

ITEM 203.02 - UNCLASSIFIED EXCAVATION AND DISPOSAL (CY)
ITEM 304.15010005 - SUBBASE COURSE, OPTIONAL TYPE (MODIFIED) (CY)
ITEM 490.10 - PRODUCTION COLD MILLING OF BITUMINOUS CONCRETE (SY)
ITEM 608.0101 - CONCRETE SIDEWALKS & DRIVEWAYS (CY)
ITEM 608.020102 - HMA SWK, DWY, BICYCLE PATHS & VEG CONTROL STRIPS (TON)

NOTES:

1. REFER TO DWGS. TYP-1 THRU TYP-10 FOR TYPICAL SECTIONS.
2. REFER TO DWGS. MST-1 THRU MST-17 FOR ITEM TABLES.
3. REFER TO DWGS. STP-1 THRU STP-27 FOR STRIPING PLANS.
4. REFER TO DWGS. DRN-1 THRU DRN-27 FOR PROPOSED DRAINAGE PLANS.
5. PROPERTY RELEASE REQUIRED FROM THE RESPECTIVE PROPERTY OWNERS FOR WORK OUTSIDE OF THE ROW BOUNDARY.

AFFIX SEAL:
ON:

ALTERED BY:
ON:

D264571
STATE OF NEW YORK
ROBERT F. SCHALLER
LICENSED PROFESSIONAL ENGINEER
NO. 082465

AS-BUILT REVISIONS
DESCRIPTION OF ALTERATIONS:

NY 78, TRANSIT ROAD, S.H. 1334A-1
FRENCH ROAD TO WEHRLE DRIVE
TOWNS OF CHEEKTOWAGA & LANCASTER
VILLAGE OF DEPEW
COUNTY: ERIE REGION: 05

PIN 5813.61
NY 78
UTILITY QUALITY LEVEL D

BRIDGES

CULVERTS

ALL DIMENSIONS IN ft UNLESS OTHERWISE NOTED

GENERAL PLANS
STA. 114+50 TO STA. 120+50

CONTRACT NUMBER
D264571

DRAWING NO. GNP-15
SHEET NO. 113

IT IS A VIOLATION OF LAW FOR ANY PERSON, UNLESS THEY ARE ACTING UNDER THE DIRECTION OF A LICENSED PROFESSIONAL ENGINEER, ARCHITECT, LANDSCAPE ARCHITECT, OR LAND SURVEYOR, TO ALTER AN ITEM IN ANY WAY. IF AN ITEM BEARING THE STAMP OF A LICENSED PROFESSIONAL IS ALTERED, THE ALTERING ENGINEER, ARCHITECT, LANDSCAPE ARCHITECT, OR LAND SURVEYOR SHALL STAMP THE DOCUMENT AND INCLUDE THE NOTATION "ALTERED BY" FOLLOWED BY THEIR SIGNATURE, THE DATE OF SUCH ALTERATION, AND A SPECIFIC DESCRIPTION OF THE ALTERATION.

NEW YORK STATE OF OPPORTUNITY. Department of Transportation

PROJECT MANAGER S. S. VAIDYA
CHECK R. F. SCHALLER
DRAFTING C. L. CRITES
CHECK R. F. SCHALLER
DESIGN C. L. CRITES
JOB MANAGER R. F. SCHALLER
DESIGN SUPERVISOR S. S. VAIDYA

FILE NAME = 581361_CPH_HWY_GNP-15.dgn
DATE/TIME = 22-JUN-2021 12:41
USER = cscrites

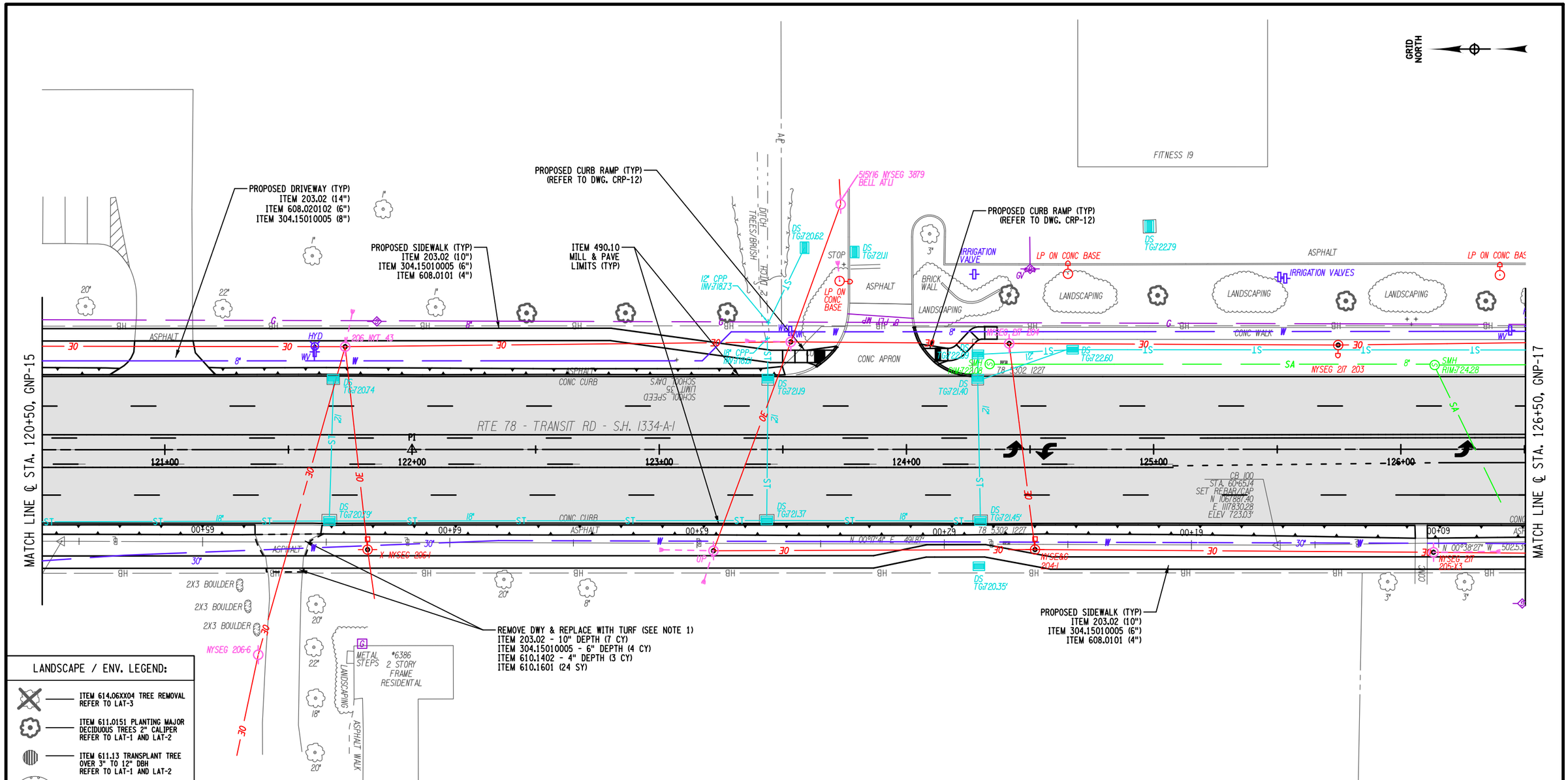

LANDSCAPE / ENV. LEGEND:

- ITEM 614.06XX04 TREE REMOVAL REFER TO LAT-3
- ITEM 611.0151 PLANTING MAJOR DECIDUOUS TREES 2" CALIPER REFER TO LAT-1 AND LAT-2
- ITEM 611.13 TRANSPLANT TREE OVER 3" TO 12" DBH REFER TO LAT-1 AND LAT-2
- ITEM 614.08 VERTICAL MULCHING REFER TO LAT-1 AND LAT-2

20 0 20 40 60 80'

1" = 40'

ITEM SUMMARY:

ITEM 203.02 - UNCLASSIFIED EXCAVATION & DISPOSAL (CY)
ITEM 304.15010005 - SUBBASE COURSE, OPTIONAL TYPE (MODIFIED) (CY)
ITEM 490.10 - PRODUCTION COLD MILLING OF BITUMINOUS CONCRETE (SY)
ITEM 608.0101 - CONCRETE SIDEWALKS & DRIVEWAYS (CY)
ITEM 608020102 - HMA SWK, DWY, BICYCLE PATHS & VEG CONTROL STRIPS (TON)
ITEM 610.1402 - TOPSOIL (ROADSIDE) (CY)
ITEM 610.1601 - TURF ESTABLISHMENT (ROADSIDE) (SY)

NOTES:

1. REFER TO NOTE B UNDER THE TITLE "COORDINATION WITH CONCURRENT CONSTRUCTION" ON DRAWING GNN-1 FOR FURTHER INSTRUCTION ON THE REMOVAL OF THIS DRIVEWAY PRIOR TO BEGINNING PROPOSED WORK AT THIS LOCATION.
2. REFER TO DWGS. TYP-1 THRU TYP-10 FOR TYPICAL SECTIONS.
3. REFER TO DWGS. MST-1 THRU MST-17 FOR ITEM TABLES.
4. REFER TO DWGS. STP-1 THRU STP-27 FOR STRIPING PLANS.
5. REFER TO DWGS. DRN-1 THRU DRN-27 FOR PROPOSED DRAINAGE PLANS.
6. PROPERTY RELEASE REQUIRED FROM THE RESPECTIVE PROPERTY OWNERS FOR WORK OUTSIDE OF THE ROW BOUNDARY.

AFFIX SEAL:
ON:

D264571

STATE OF NEW YORK · ROBERT F. SCHALLER · NO. 082465 · LICENSED PROFESSIONAL ENGINEER

ALTERED BY:
ON:

AS-BUILT REVISIONS
DESCRIPTION OF ALTERATIONS:

NY 78, TRANSIT ROAD, S.H. 1334A-1	PIN 5813.61	BRIDGES	CULVERTS	ALL DIMENSIONS IN ft UNLESS OTHERWISE NOTED
FRENCH ROAD TO WEHRLE DRIVE	NY 78			GENERAL PLANS
TOWNS OF CHEEKTOWAGA & LANCASTER	UTILITY QUALITY LEVEL D			STA. 120+50 TO STA. 126+50
VILLAGE OF DEPEW				
COUNTY: ERIE REGION: 05				

CONTRACT NUMBER
D264571

DRAWING NO. GNP-16
SHEET NO. 114

IT IS A VIOLATION OF LAW FOR ANY PERSON, UNLESS THEY ARE ACTING UNDER THE DIRECTION OF A LICENSED PROFESSIONAL ENGINEER, ARCHITECT, LANDSCAPE ARCHITECT, OR LAND SURVEYOR, TO ALTER AN ITEM IN ANY WAY. IF AN ITEM BEARING THE STAMP OF A LICENSED PROFESSIONAL IS ALTERED, THE ALTERING ENGINEER, ARCHITECT, LANDSCAPE ARCHITECT, OR LAND SURVEYOR SHALL STAMP THE DOCUMENT AND INCLUDE THE NOTATION "ALTERED BY" FOLLOWED BY THEIR SIGNATURE, THE DATE OF SUCH ALTERATION, AND A SPECIFIC DESCRIPTION OF THE ALTERATION.

NEW YORK STATE OF OPPORTUNITY. Department of Transportation

PROJECT MANAGER S. S. VAIDYA
CHECK R. F. SCHALLER
DRAFTING C. L. CRITES
CHECK R. F. SCHALLER
DESIGN C. L. CRITES
JOB MANAGER R. F. SCHALLER
DESIGN SUPERVISOR S. S. VAIDYA

FILE NAME = 581361_CPH_HWY_GNP-16.dgn
DATE/TIME = 22-JUN-2021 12:41
USER = cartes

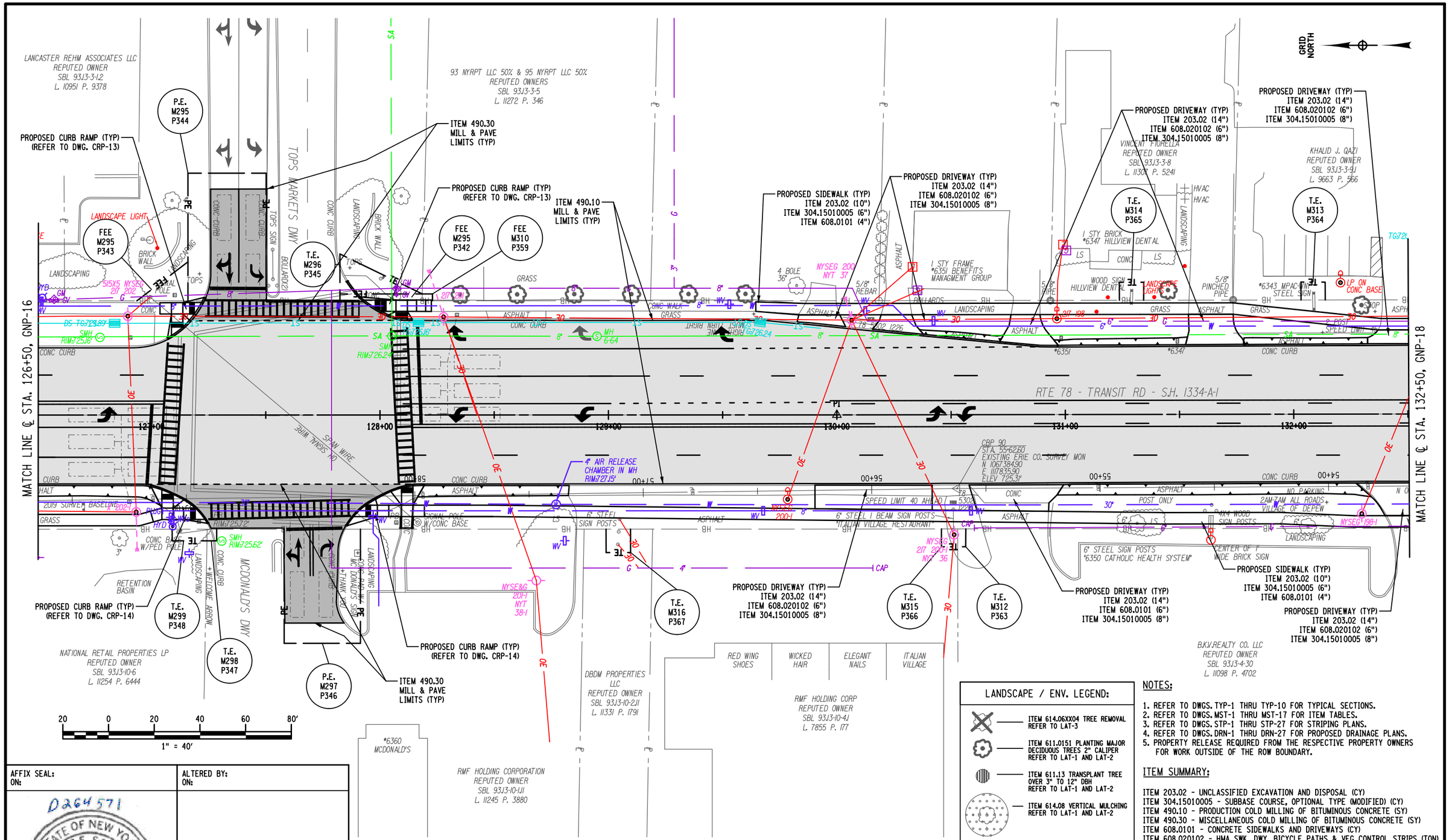

LANDSCAPE / ENV. LEGEND:

- ITEM 614.06XX04 TREE REMOVAL REFER TO LAT-3
- ITEM 611.0151 PLANTING MAJOR DECIDUOUS TREES 2" CALIPER REFER TO LAT-1 AND LAT-2
- ITEM 611.13 TRANSPLANT TREE OVER 3" TO 12" DBH REFER TO LAT-1 AND LAT-2
- ITEM 614.08 VERTICAL MULCHING REFER TO LAT-1 AND LAT-2

NOTES:

1. REFER TO DWGS. TYP-1 THRU TYP-10 FOR TYPICAL SECTIONS.
2. REFER TO DWGS. MST-1 THRU MST-17 FOR ITEM TABLES.
3. REFER TO DWGS. STP-1 THRU STP-27 FOR STRIPING PLANS.
4. REFER TO DWGS. DRN-1 THRU DRN-27 FOR PROPOSED DRAINAGE PLANS.
5. PROPERTY RELEASE REQUIRED FROM THE RESPECTIVE PROPERTY OWNERS FOR WORK OUTSIDE OF THE ROW BOUNDARY.

ITEM SUMMARY:

ITEM 203.02 - UNCLASSIFIED EXCAVATION AND DISPOSAL (CY)
ITEM 304.15010005 - SUBBASE COURSE, OPTIONAL TYPE (MODIFIED) (CY)
ITEM 490.10 - PRODUCTION COLD MILLING OF BITUMINOUS CONCRETE (SY)
ITEM 490.30 - MISCELLANEOUS COLD MILLING OF BITUMINOUS CONCRETE (SY)
ITEM 608.0101 - CONCRETE SIDEWALKS AND DRIVEWAYS (CY)
ITEM 608.020102 - HMA SWK, DWY, BICYCLE PATHS & VEG CONTROL STRIPS (TON)

AFFIX SEAL:
ON:

ALTERED BY:
ON:

D264571
STATE OF NEW YORK
ROBERT F. SCHALLER
NO. 082465
LICENSED PROFESSIONAL ENGINEER

AS-BUILT REVISIONS
DESCRIPTION OF ALTERATIONS:

NY 78, TRANSIT ROAD, S.H. 1334A-1
FRENCH ROAD TO WEHRLE DRIVE
TOWNS OF CHEEKTOWAGA & LANCASTER
VILLAGE OF DEPEW
COUNTY: ERIE REGION: 05

PIN 5813.61
NY 78
UTILITY QUALITY LEVEL D

BRIDGES

CULVERTS

ALL DIMENSIONS IN ft UNLESS OTHERWISE NOTED

GENERAL PLANS
STA. 126+50 TO STA. 132+50

CONTRACT NUMBER
D264571

DRAWING NO. GNP-17
SHEET NO. 115

IT IS A VIOLATION OF LAW FOR ANY PERSON, UNLESS THEY ARE ACTING UNDER THE DIRECTION OF A LICENSED PROFESSIONAL ENGINEER, ARCHITECT, LANDSCAPE ARCHITECT, OR LAND SURVEYOR, TO ALTER AN ITEM IN ANY WAY. IF AN ITEM BEARING THE STAMP OF A LICENSED PROFESSIONAL IS ALTERED, THE ALTERING ENGINEER, ARCHITECT, LANDSCAPE ARCHITECT, OR LAND SURVEYOR SHALL STAMP THE DOCUMENT AND INCLUDE THE NOTATION "ALTERED BY" FOLLOWED BY THEIR SIGNATURE, THE DATE OF SUCH ALTERATION, AND A SPECIFIC DESCRIPTION OF THE ALTERATION.

NEW YORK STATE OF OPPORTUNITY. Department of Transportation

PROJECT MANAGER S. S. VAIDYA
CHECK R. F. SCHALLER
DRAFTING C. L. CRITES
CHECK R. F. SCHALLER
DESIGN C. L. CRITES
JOB MANAGER R. F. SCHALLER
DESIGN SUPERVISOR S. S. VAIDYA

FILE NAME = 581361_CPH_HWY_GNP-17.dgn
DATE/TIME = 22-JUN-2021 12:41
USER = corites

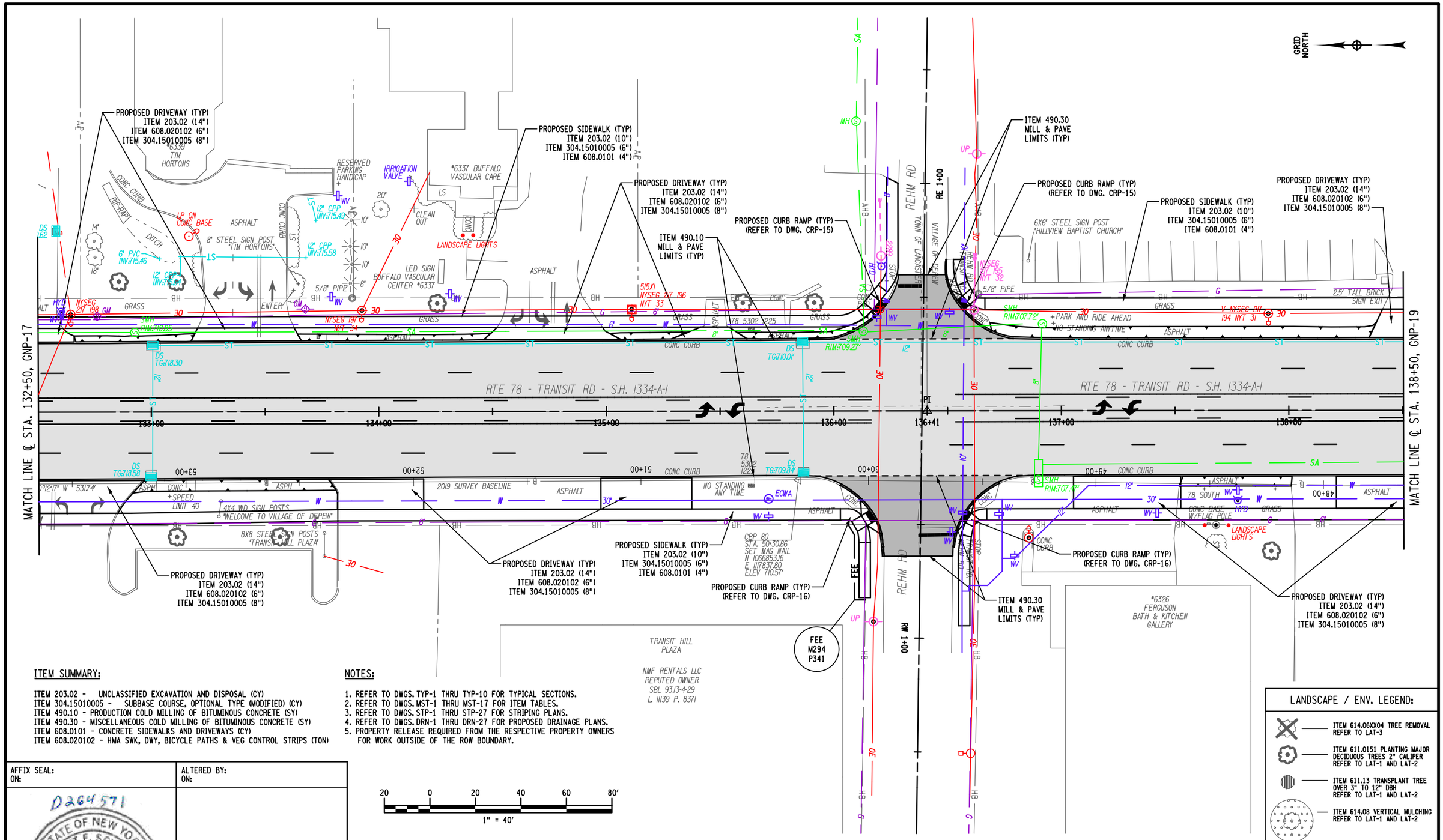

ITEM SUMMARY:

ITEM 203.02 - UNCLASSIFIED EXCAVATION AND DISPOSAL (CY)
ITEM 304.15010005 - SUBBASE COURSE, OPTIONAL TYPE (MODIFIED) (CY)
ITEM 490.10 - PRODUCTION COLD MILLING OF BITUMINOUS CONCRETE (SY)
ITEM 490.30 - MISCELLANEOUS COLD MILLING OF BITUMINOUS CONCRETE (SY)
ITEM 608.0101 - CONCRETE SIDEWALKS AND DRIVEWAYS (CY)
ITEM 608.020102 - HMA SWK, DWY, BICYCLE PATHS & VEG CONTROL STRIPS (TON)

NOTES:

1. REFER TO DWGS. TYP-1 THRU TYP-10 FOR TYPICAL SECTIONS.
2. REFER TO DWGS. MST-1 THRU MST-17 FOR ITEM TABLES.
3. REFER TO DWGS. STP-1 THRU STP-27 FOR STRIPING PLANS.
4. REFER TO DWGS. DRN-1 THRU DRN-27 FOR PROPOSED DRAINAGE PLANS.
5. PROPERTY RELEASE REQUIRED FROM THE RESPECTIVE PROPERTY OWNERS FOR WORK OUTSIDE OF THE ROW BOUNDARY.

20 0 20 40 60 80'
1" = 40'

LANDSCAPE / ENV. LEGEND:

- ITEM 614.06XX04 TREE REMOVAL REFER TO LAT-3
- ITEM 611.0151 PLANTING MAJOR DECIDUOUS TREES 2" CALIPER REFER TO LAT-1 AND LAT-2
- ITEM 611.13 TRANSPLANT TREE OVER 3" TO 12" DBH REFER TO LAT-1 AND LAT-2
- ITEM 614.08 VERTICAL MULCHING REFER TO LAT-1 AND LAT-2

AFFIX SEAL:
ON:

D264571
STATE OF NEW YORK
ROBERT F. SCHALLER
NO. 082465
LICENSED PROFESSIONAL ENGINEER

ALTERED BY:
ON:

AS-BUILT REVISIONS
DESCRIPTION OF ALTERATIONS:

NY 78, TRANSIT ROAD, S.H. 1334A-1
FRENCH ROAD TO WEHRLE DRIVE
TOWNS OF CHEEKTOWAGA & LANCASTER
VILLAGE OF DEPEW
COUNTY: ERIE REGION: 05

PIN 5813.61
NY 78
UTILITY QUALITY LEVEL D

BRIDGES

CULVERTS

ALL DIMENSIONS IN ft UNLESS OTHERWISE NOTED

GENERAL PLANS
STA. 132+50 TO STA. 138+50

CONTRACT NUMBER
D264571

DRAWING NO. GNP-18
SHEET NO. 116

IT IS A VIOLATION OF LAW FOR ANY PERSON, UNLESS THEY ARE ACTING UNDER THE DIRECTION OF A LICENSED PROFESSIONAL ENGINEER, ARCHITECT, LANDSCAPE ARCHITECT, OR LAND SURVEYOR, TO ALTER AN ITEM IN ANY WAY. IF AN ITEM BEARING THE STAMP OF A LICENSED PROFESSIONAL IS ALTERED, THE ALTERING ENGINEER, ARCHITECT, LANDSCAPE ARCHITECT, OR LAND SURVEYOR SHALL STAMP THE DOCUMENT AND INCLUDE THE NOTATION "ALTERED BY" FOLLOWED BY THEIR SIGNATURE, THE DATE OF SUCH ALTERATION, AND A SPECIFIC DESCRIPTION OF THE ALTERATION.

NEW YORK STATE OF OPPORTUNITY. Department of Transportation

PROJECT MANAGER S. S. VAIDYA
CHECK R. F. SCHALLER
DRAFTING C. L. CRITES
CHECK R. F. SCHALLER
DESIGN C. L. CRITES
JOB MANAGER R. F. SCHALLER
DESIGN SUPERVISOR S. S. VAIDYA

FILE NAME = 581361_CPH_HWY_GNP-18.dgn
DATE/TIME = 22-JUN-2021 12:41
USER = ccrites

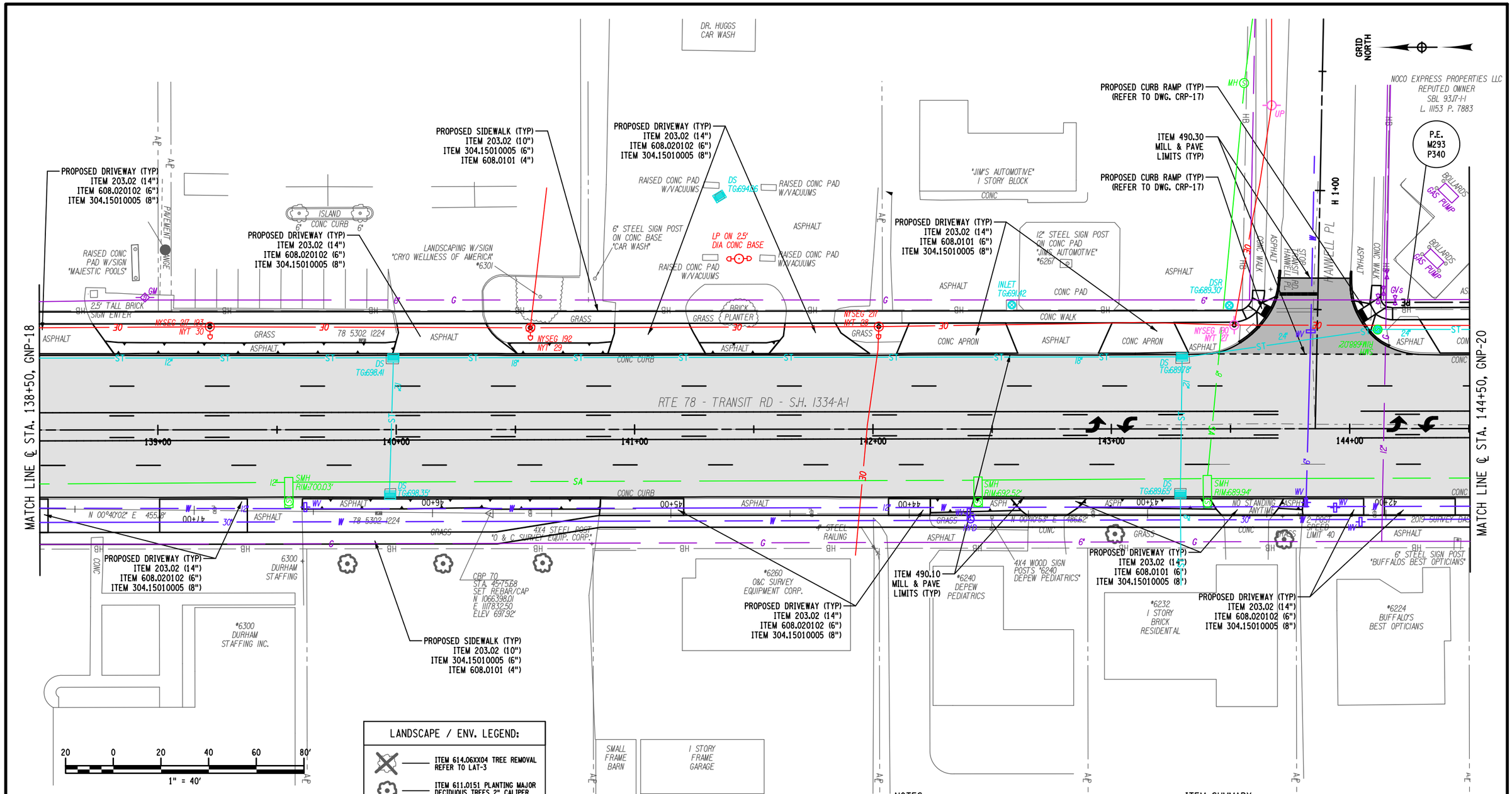

LANDSCAPE / ENV. LEGEND:

- ITEM 614.06XX04 TREE REMOVAL REFER TO LAT-3
- ITEM 611.0151 PLANTING MAJOR DECIDUOUS TREES 2" CALIPER REFER TO LAT-1 AND LAT-2
- ITEM 611.13 TRANSPLANT TREE OVER 3" TO 12" DBH REFER TO LAT-1 AND LAT-2
- ITEM 614.08 VERTICAL MULCHING REFER TO LAT-1 AND LAT-2

NOTES:

1. REFER TO DWGS. TYP-1 THRU TYP-10 FOR TYPICAL SECTIONS.
2. REFER TO DWGS. MST-1 THRU MST-17 FOR ITEM TABLES.
3. REFER TO DWGS. STP-1 THRU STP-27 FOR STRIPING PLANS.
4. REFER TO DWGS. DRN-1 THRU DRN-27 FOR PROPOSED DRAINAGE PLANS.
5. PROPERTY RELEASE REQUIRED FROM THE RESPECTIVE PROPERTY OWNERS FOR WORK OUTSIDE OF THE ROW BOUNDARY.

ITEM SUMMARY:

ITEM 203.02 - UNCLASSIFIED EXCAVATION AND DISPOSAL (CY)
ITEM 304.15010005 - SUBBASE COURSE, OPTIONAL TYPE (MODIFIED) (CY)
ITEM 490.10 - PRODUCTION COLD MILLING OF BITUMINOUS CONCRETE (SY)
ITEM 490.30 - MISCELLANEOUS COLD MILLING OF BITUMINOUS CONCRETE (SY)
ITEM 608.0101 - CONCRETE SIDEWALKS AND DRIVEWAYS (CY)
ITEM 608.020102 - HMA SWK, DWY, BICYCLE PATHS & VEG CONTROL STRIPS (TON)

AFFIX SEAL:
ON:

ALTERED BY:
ON:

D264571
STATE OF NEW YORK
ROBERT F. SCHALLER
LICENSED PROFESSIONAL ENGINEER
NO. 082465

AS-BUILT REVISIONS
DESCRIPTION OF ALTERATIONS:

NY 78, TRANSIT ROAD, S.H. 1334A-1
FRENCH ROAD TO WEHRLE DRIVE
TOWNS OF CHEEKTOWAGA & LANCASTER
VILLAGE OF DEPEW
COUNTY: ERIE REGION: 05

PIN 5813.61
NY 78
UTILITY QUALITY LEVEL D

BRIDGES

CULVERTS

ALL DIMENSIONS IN ft UNLESS OTHERWISE NOTED

GENERAL PLANS
STA. 135+50 TO STA. 144+50

CONTRACT NUMBER
D264571

DRAWING NO. GNP-19
SHEET NO. 117

IT IS A VIOLATION OF LAW FOR ANY PERSON, UNLESS THEY ARE ACTING UNDER THE DIRECTION OF A LICENSED PROFESSIONAL ENGINEER, ARCHITECT, LANDSCAPE ARCHITECT, OR LAND SURVEYOR, TO ALTER AN ITEM IN ANY WAY. IF AN ITEM BEARING THE STAMP OF A LICENSED PROFESSIONAL IS ALTERED, THE ALTERING ENGINEER, ARCHITECT, LANDSCAPE ARCHITECT, OR LAND SURVEYOR SHALL STAMP THE DOCUMENT AND INCLUDE THE NOTATION "ALTERED BY" FOLLOWED BY THEIR SIGNATURE, THE DATE OF SUCH ALTERATION, AND A SPECIFIC DESCRIPTION OF THE ALTERATION.

NEW YORK STATE OF OPPORTUNITY. Department of Transportation

PROJECT MANAGER S. S. VAIDYA
CHECK R. F. SCHALLER
DRAFTING C. L. CRITES
CHECK R. F. SCHALLER
DESIGN C. L. CRITES
JOB MANAGER R. F. SCHALLER
DESIGN SUPERVISOR S. S. VAIDYA

FILE NAME = 581361_CPH_HWY_GNP-19.dgn
DATE/TIME = 22-JUN-2021 12:42
USER = ccrites

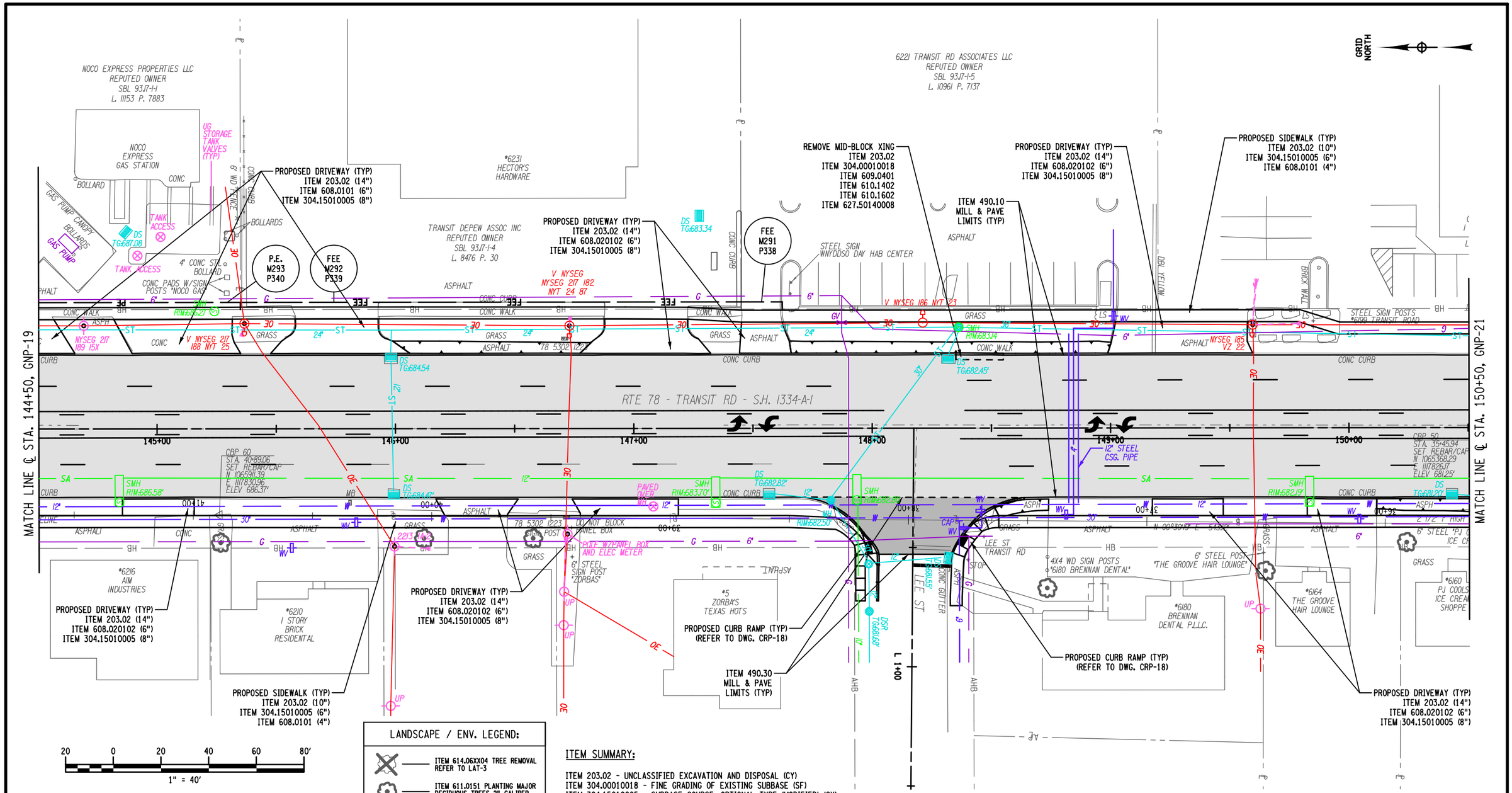

LANDSCAPE / ENV. LEGEND:

- ITEM 614.06XX04 TREE REMOVAL REFER TO LAT-3
- ITEM 611.0151 PLANTING MAJOR DECIDUOUS TREES 2" CALIPER REFER TO LAT-1 AND LAT-2
- ITEM 611.13 TRANSPLANT TREE OVER 3" TO 12" DBH REFER TO LAT-1 AND LAT-2
- ITEM 614.08 VERTICAL MULCHING REFER TO LAT-1 AND LAT-2

ITEM SUMMARY:

ITEM 203.02 - UNCLASSIFIED EXCAVATION AND DISPOSAL (CY)
ITEM 304.00010018 - FINE GRADING OF EXISTING SUBBASE (SF)
ITEM 304.15010005 - SUBBASE COURSE, OPTIONAL TYPE (MODIFIED) (CY)
ITEM 490.10 - PRODUCTION COLD MILLING OF BITUMINOUS CONCRETE (SY)
ITEM 490.30 - MISCELLANEOUS COLD MILLING OF BITUMINOUS CONCRETE (SY)
ITEM 608.0101 - CONCRETE SIDEWALKS AND DRIVEWAYS (CY)
ITEM 608.020102 - HMA SWK, DWY, BYCYCLE PATHS & VEG CONTROL STRIPS (TON)
ITEM 609.0401 - CAST-IN-PLACE CONCRETE CURB, TYPE VF150 (LF)
ITEM 610.1402 - TOPSOIL (ROADSIDE) (CY)
ITEM 610.1602 - TURF ESTABLISHMENT (LAWNS) (SY)
ITEM 627.50140008 - CUTTING PAVEMENT (LF)

NOTES:

1. REFER TO DWGS. TYP-1 THRU TYP-10 FOR TYPICAL SECTIONS.
2. REFER TO DWGS. MST-1 THRU MST-17 FOR ITEM TABLES.
3. REFER TO DWGS. STP-1 THRU STP-27 FOR STRIPING PLANS.
4. REFER TO DWGS. DRN-1 THRU DRN-27 FOR PROPOSED DRAINAGE PLANS.
5. PROPERTY RELEASE REQUIRED FROM THE RESPECTIVE PROPERTY OWNERS FOR WORK OUTSIDE OF THE ROW BOUNDARY.

AFFIX SEAL:
ON:

ALTERED BY:
ON:

D264571
STATE OF NEW YORK
ROBERT F. SCHALLER
NO. 082465
LICENSED PROFESSIONAL ENGINEER

AS-BUILT REVISIONS
DESCRIPTION OF ALTERATIONS:

NY 78, TRANSIT ROAD, S.H. 1334A-1	PIN 5813.61	BRIDGES	CULVERTS	ALL DIMENSIONS IN ft UNLESS OTHERWISE NOTED
FRENCH ROAD TO WEHRLE DRIVE	NY 78			GENERAL PLANS
TOWNS OF CHEEKTOWAGA & LANCASTER	UTILITY QUALITY LEVEL D			STA. 144+50 TO STA. 150+50
VILLAGE OF DEPEW				
COUNTY: ERIE REGION: 05				

CONTRACT NUMBER
D264571

DRAWING NO. GNP-20
SHEET NO. 118

IT IS A VIOLATION OF LAW FOR ANY PERSON, UNLESS THEY ARE ACTING UNDER THE DIRECTION OF A LICENSED PROFESSIONAL ENGINEER, ARCHITECT, LANDSCAPE ARCHITECT, OR LAND SURVEYOR, TO ALTER AN ITEM IN ANY WAY. IF AN ITEM BEARING THE STAMP OF A LICENSED PROFESSIONAL IS ALTERED, THE ALTERING ENGINEER, ARCHITECT, LANDSCAPE ARCHITECT, OR LAND SURVEYOR SHALL STAMP THE DOCUMENT AND INCLUDE THE NOTATION "ALTERED BY" FOLLOWED BY THEIR SIGNATURE, THE DATE OF SUCH ALTERATION, AND A SPECIFIC DESCRIPTION OF THE ALTERATION.

NEW YORK STATE OF OPPORTUNITY. Department of Transportation

PROJECT MANAGER S. S. VAIDYA
CHECK R. F. SCHALLER
DRAFTING C. L. CRITES
CHECK R. F. SCHALLER
DESIGN C. L. CRITES
JOB MANAGER R. F. SCHALLER
DESIGN SUPERVISOR S. S. VAIDYA
FILE NAME = 581361_CPH_HWY_GNP-20.dgn
DATE/TIME = 22-JUN-2021 12:42
USER = ccrites

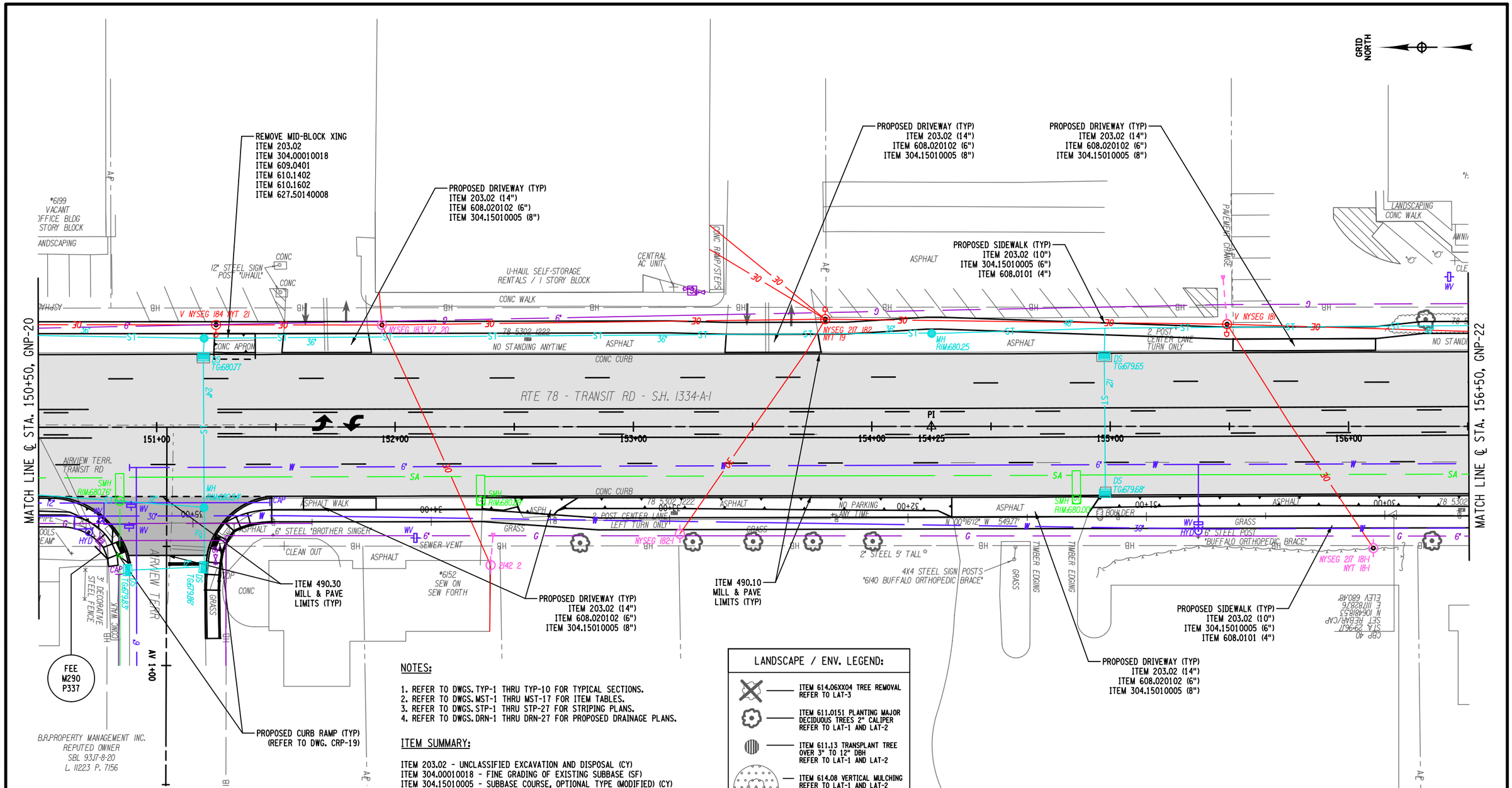

NOTES:

1. REFER TO DWGS. TYP-1 THRU TYP-10 FOR TYPICAL SECTIONS.
2. REFER TO DWGS. MST-1 THRU MST-17 FOR ITEM TABLES.
3. REFER TO DWGS. STP-1 THRU STP-27 FOR STRIPING PLANS.
4. REFER TO DWGS. DRN-1 THRU DRN-27 FOR PROPOSED DRAINAGE PLANS.

ITEM SUMMARY:

ITEM 203.02 - UNCLASSIFIED EXCAVATION AND DISPOSAL (CY)
ITEM 304.00010018 - FINE GRADING OF EXISTING SUBBASE (SF)
ITEM 304.15010005 - SUBBASE COURSE, OPTIONAL TYPE (MODIFIED) (CY)
ITEM 490.10 - PRODUCTION COLD MILLING OF BITUMINOUS CONCRETE (SY)
ITEM 490.30 - MISCELLANEOUS COLD MILLING OF BITUMINOUS CONCRETE (SY)
ITEM 608.0101 - CONCRETE SIDEWALKS AND DRIVEWAYS (CY)
ITEM 608.020102 - HMA SWK, DWY, BYCYCLE PATHS & VEG CONTROL STRIPS (TON)
ITEM 609.0401 - CAST-IN-PLACE CONCRETE CURB, TYPE VF150 (LF)
ITEM 610.1402 - TOPSOIL (ROADSIDE) (CY)
ITEM 610.1602 - TURF ESTABLISHMENT (LAWNS) (SY)
ITEM 627.50140008 - CUTTING PAVEMENT (LF)

LANDSCAPE / ENV. LEGEND:

- ITEM 614.06XX04 TREE REMOVAL REFER TO LAT-3
- ITEM 611.0151 PLANTING MAJOR DECIDUOUS TREES 2" CALIPER REFER TO LAT-1 AND LAT-2
- ITEM 611.13 TRANSPLANT TREE OVER 3" TO 12" DBH REFER TO LAT-1 AND LAT-2
- ITEM 614.08 VERTICAL MULCHING REFER TO LAT-1 AND LAT-2

AFFIX SEAL:
ON:

ALTERED BY:
ON:

D264571

STATE OF NEW YORK
ROBERT F. SCHALLER
NO. 082465
LICENSED PROFESSIONAL ENGINEER

AS-BUILT REVISIONS DESCRIPTION OF ALTERATIONS:	NY 78, TRANSIT ROAD, S.H. 1334A-1 FRENCH ROAD TO WEHRLE DRIVE TOWNS OF CHEEKTOWAGA & LANCASTER VILLAGE OF DEPEW COUNTY: ERIE REGION: 05	PIN 5813.61 NY 78 UTILITY QUALITY LEVEL D	BRIDGES	CULVERTS	ALL DIMENSIONS IN ft UNLESS OTHERWISE NOTED GENERAL PLANS STA. 150+50 TO STA. 156+50	CONTRACT NUMBER D264571 DRAWING NO. GNP-21 SHEET NO. 119

IT IS A VIOLATION OF LAW FOR ANY PERSON, UNLESS THEY ARE ACTING UNDER THE DIRECTION OF A LICENSED PROFESSIONAL ENGINEER, ARCHITECT, LANDSCAPE ARCHITECT, OR LAND SURVEYOR, TO ALTER AN ITEM IN ANY WAY. IF AN ITEM BEARING THE STAMP OF A LICENSED PROFESSIONAL IS ALTERED, THE ALTERING ENGINEER, ARCHITECT, LANDSCAPE ARCHITECT, OR LAND SURVEYOR SHALL STAMP THE DOCUMENT AND INCLUDE THE NOTATION "ALTERED BY" FOLLOWED BY THEIR SIGNATURE, THE DATE OF SUCH ALTERATION, AND A SPECIFIC DESCRIPTION OF THE ALTERATION.

NEW YORK STATE OF OPPORTUNITY. Department of Transportation

PROJECT MANAGER S. S. VAIDYA
CHECK R. F. SCHALLER
DRAFTING C. L. CRITES
DESIGN C. L. CRITES
JOB MANAGER R. F. SCHALLER
DESIGN SUPERVISOR S. S. VAIDYA

FILE NAME = 581361_CPH.HWY.GNP-21.dgn
DATE/TIME = 22-JUN-2021 12:42
USER = crites

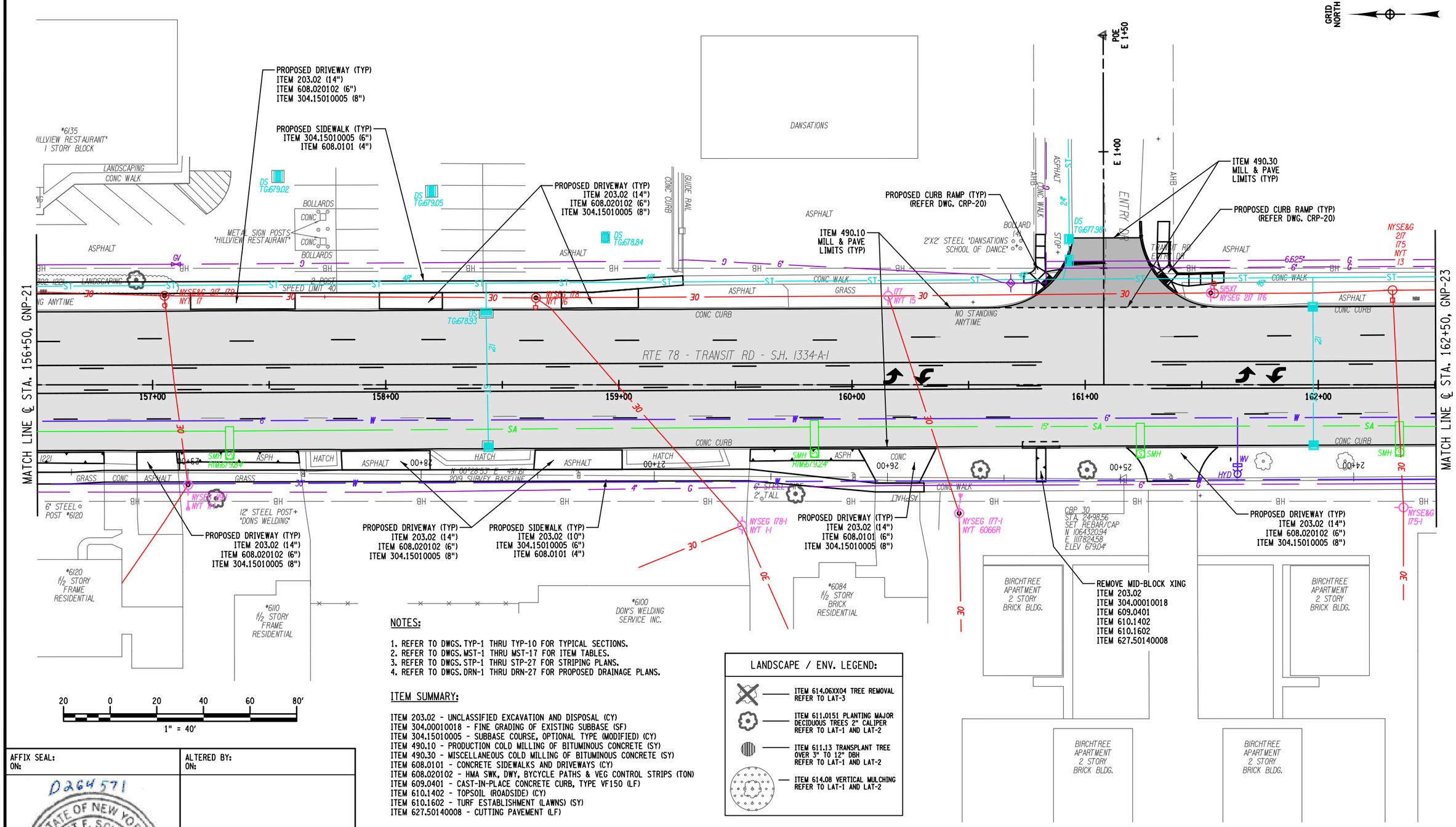

NOTES:

1. REFER TO DWGS. TYP-1 THRU TYP-10 FOR TYPICAL SECTIONS.
2. REFER TO DWGS. MST-1 THRU MST-17 FOR ITEM TABLES.
3. REFER TO DWGS. STP-1 THRU STP-27 FOR STRIPING PLANS.
4. REFER TO DWGS. DRN-1 THRU DRN-27 FOR PROPOSED DRAINAGE PLANS.

ITEM SUMMARY:

ITEM 203.02 - UNCLASSIFIED EXCAVATION AND DISPOSAL (CY)
ITEM 304.00010018 - FINE GRADING OF EXISTING SUBBASE (SF)
ITEM 304.15010005 - SUBBASE COURSE, OPTIONAL TYPE (MODIFIED) (CY)
ITEM 490.10 - PRODUCTION COLD MILLING OF BITUMINOUS CONCRETE (SY)
ITEM 490.30 - MISCELLANEOUS COLD MILLING OF BITUMINOUS CONCRETE (SY)
ITEM 608.0101 - CONCRETE SIDEWALKS AND DRIVEWAYS (CY)
ITEM 608.020102 - HMA SWK, DWY, BYCYCLE PATHS & VEG CONTROL STRIPS (TON)
ITEM 609.0401 - CAST-IN-PLACE CONCRETE CURB, TYPE VF150 (LF)
ITEM 610.1402 - TOPSOIL (ROADSIDE) (CY)
ITEM 610.1602 - TURF ESTABLISHMENT (LAWNS) (SY)
ITEM 627.50140008 - CUTTING PAVEMENT (LF)

LANDSCAPE / ENV. LEGEND:

- ITEM 614.06XX04 TREE REMOVAL REFER TO LAT-3
- ITEM 611.0151 PLANTING MAJOR DECIDUOUS TREES 2" CALIPER REFER TO LAT-1 AND LAT-2
- ITEM 611.13 TRANSPLANT TREE OVER 3" TO 12" DBH REFER TO LAT-1 AND LAT-2
- ITEM 614.08 VERTICAL MULCHING REFER TO LAT-1 AND LAT-2

AFFIX SEAL:
ON:

D264571

STATE OF NEW YORK · ROBERT F. SCHALLER · NO. 082465 · LICENSED PROFESSIONAL ENGINEER

ALTERED BY:
ON:

AS-BUILT REVISIONS
DESCRIPTION OF ALTERATIONS:

NY 78, TRANSIT ROAD, S.H. 1334A-1
FRENCH ROAD TO WEHRLE DRIVE
TOWNS OF CHEEKTOWAGA & LANCASTER
VILLAGE OF DEPEW
COUNTY: ERIE REGION: 05

PIN 5813.61
NY 78
UTILITY QUALITY LEVEL D

BRIDGES

CULVERTS

ALL DIMENSIONS IN ft UNLESS OTHERWISE NOTED

GENERAL PLANS
STA. 156+50 TO STA. 162+50

CONTRACT NUMBER
D264571

DRAWING NO. GNP-22
SHEET NO. 120

IT IS A VIOLATION OF LAW FOR ANY PERSON, UNLESS THEY ARE ACTING UNDER THE DIRECTION OF A LICENSED PROFESSIONAL ENGINEER, ARCHITECT, LANDSCAPE ARCHITECT, OR LAND SURVEYOR, TO ALTER AN ITEM IN ANY WAY. IF AN ITEM BEARING THE STAMP OF A LICENSED PROFESSIONAL IS ALTERED, THE ALTERING ENGINEER, ARCHITECT, LANDSCAPE ARCHITECT, OR LAND SURVEYOR SHALL STAMP THE DOCUMENT AND INCLUDE THE NOTATION "ALTERED BY" FOLLOWED BY THEIR SIGNATURE, THE DATE OF SUCH ALTERATION, AND A SPECIFIC DESCRIPTION OF THE ALTERATION.

NEW YORK STATE OF OPPORTUNITY. Department of Transportation

PROJECT MANAGER S. S. VAIDYA
CHECK R. F. SCHALLER
DRAFTING C. L. CRITES
DESIGN C. L. CRITES
JOB MANAGER R. F. SCHALLER
DESIGN SUPERVISOR S. S. VAIDYA

FILE NAME = 581361_CPH_HWY_GNP-22.dgn
DATE/TIME = 22-JUN-2021 12:42
USER = ccrites

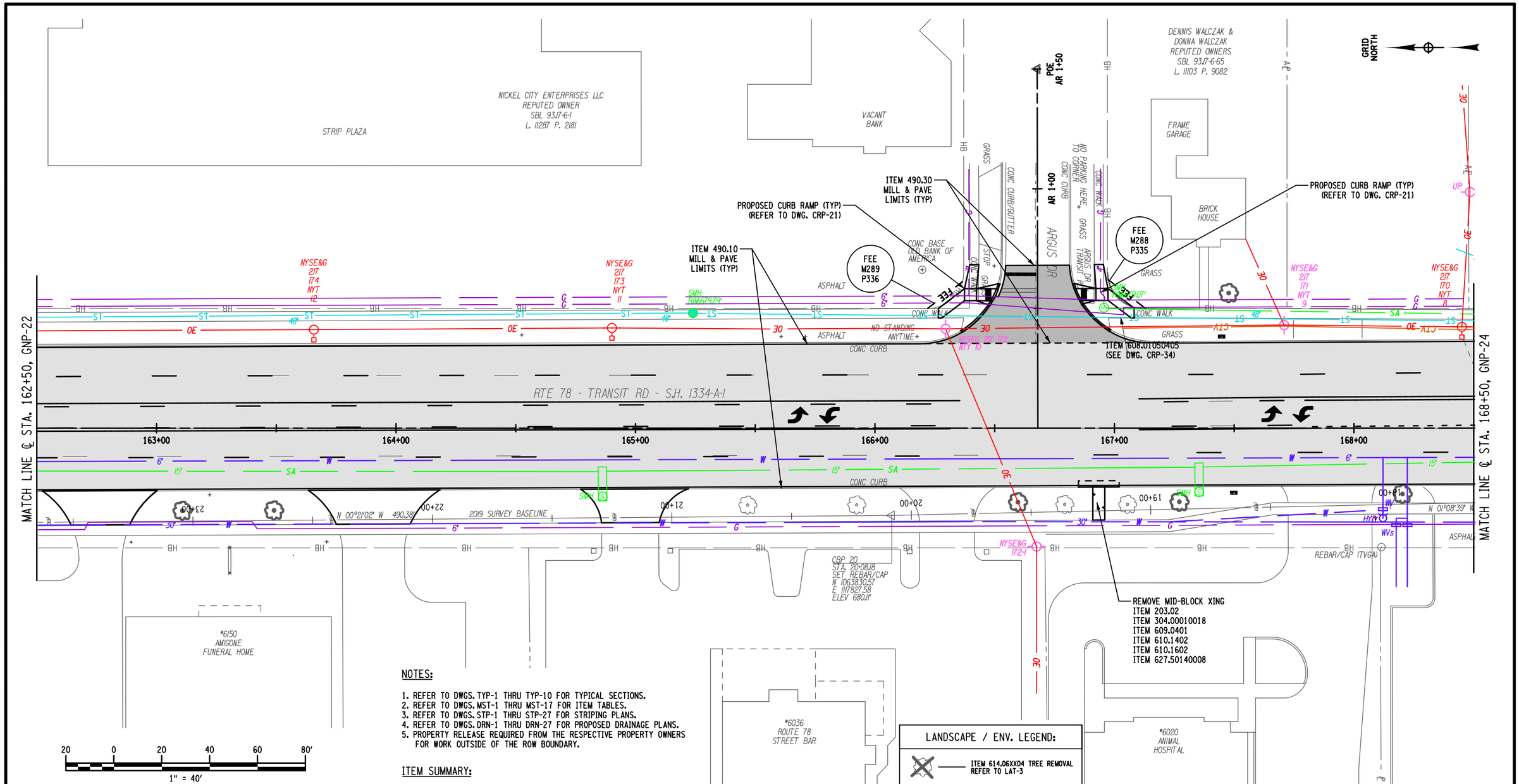

NOTES:

1. REFER TO DWGS. TYP-1 THRU TYP-10 FOR TYPICAL SECTIONS.
2. REFER TO DWGS. MST-1 THRU MST-17 FOR ITEM TABLES.
3. REFER TO DWGS. STP-1 THRU STP-27 FOR STRIPING PLANS.
4. REFER TO DWGS. DRN-1 THRU DRN-27 FOR PROPOSED DRAINAGE PLANS.
5. PROPERTY RELEASE REQUIRED FROM THE RESPECTIVE PROPERTY OWNERS FOR WORK OUTSIDE OF THE ROW BOUNDARY.

ITEM SUMMARY:

ITEM 203.02 - UNCLASSIFIED EXCAVATION AND DISPOSAL (CY)
ITEM 304.00010018 - FINE GRADING OF EXISTING SUBBASE (SF)
ITEM 490.10 - PRODUCTION COLD MILLING OF BITUMINOUS CONCRETE (SY)
ITEM 490.30 - MISCELLANEOUS COLD MILLING OF BITUMINOUS CONCRETE (SY)
ITEM 609.0401 - CAST-IN-PLACE CONCRETE CURB, TYPE VF150 (LF)
ITEM 610.1402 - TOPSOIL (ROADSIDE) (CY)
ITEM 610.1602 - TURF ESTABLISHMENT (LAWNS) (SY)
ITEM 627.50140008 - CUTTING PAVEMENT (LF)

LANDSCAPE / ENV. LEGEND:

- ITEM 614.06XX04 TREE REMOVAL REFER TO LAT-3
- ITEM 611.0151 PLANTING MAJOR DECIDUOUS TREES 2" CALIPER REFER TO LAT-1 AND LAT-2
- ITEM 611.13 TRANSPLANT TREE OVER 3" TO 12" DBH REFER TO LAT-1 AND LAT-2
- ITEM 614.08 VERTICAL MULCHING REFER TO LAT-1 AND LAT-2

AFFIX SEAL:
ON:

D264571
STATE OF NEW YORK
ROBERT F. SCHALLER
LICENSED PROFESSIONAL ENGINEER
NO. 082465

ALTERED BY:
ON:

AS-BUILT REVISIONS
DESCRIPTION OF ALTERATIONS:

NY 78, TRANSIT ROAD, S.H. 1334A-1
FRENCH ROAD TO WEHRLE DRIVE
TOWNS OF CHEEKTOWAGA & LANCASTER
VILLAGE OF DEPEW
COUNTY: ERIE REGION: 05

PIN 5813.61
NY 78
UTILITY QUALITY LEVEL D

BRIDGES

CULVERTS

ALL DIMENSIONS IN ft UNLESS OTHERWISE NOTED

GENERAL PLANS
STA. 162+50 TO STA. 168+50

CONTRACT NUMBER
D264571

DRAWING NO. GNP-23
SHEET NO. 121

IT IS A VIOLATION OF LAW FOR ANY PERSON, UNLESS THEY ARE ACTING UNDER THE DIRECTION OF A LICENSED PROFESSIONAL ENGINEER, ARCHITECT, LANDSCAPE ARCHITECT, OR LAND SURVEYOR, TO ALTER AN ITEM IN ANY WAY. IF AN ITEM BEARING THE STAMP OF A LICENSED PROFESSIONAL IS ALTERED, THE ALTERING ENGINEER, ARCHITECT, LANDSCAPE ARCHITECT, OR LAND SURVEYOR SHALL STAMP THE DOCUMENT AND INCLUDE THE NOTATION "ALTERED BY" FOLLOWED BY THEIR SIGNATURE, THE DATE OF SUCH ALTERATION, AND A SPECIFIC DESCRIPTION OF THE ALTERATION.

NEW YORK STATE OF OPPORTUNITY. Department of Transportation

PROJECT MANAGER S. S. VAIDYA
CHECK R. F. SCHALLER
DRAFTING C. L. CRITES
CHECK R. F. SCHALLER
DESIGN C. L. CRITES
JOB MANAGER R. F. SCHALLER
DESIGN SUPERVISOR S. S. VAIDYA

FILE NAME = 581361_CPH_HWY_GNP-23.dgn
DATE/TIME = 22-JUN-2021 12:42
USER = cortes

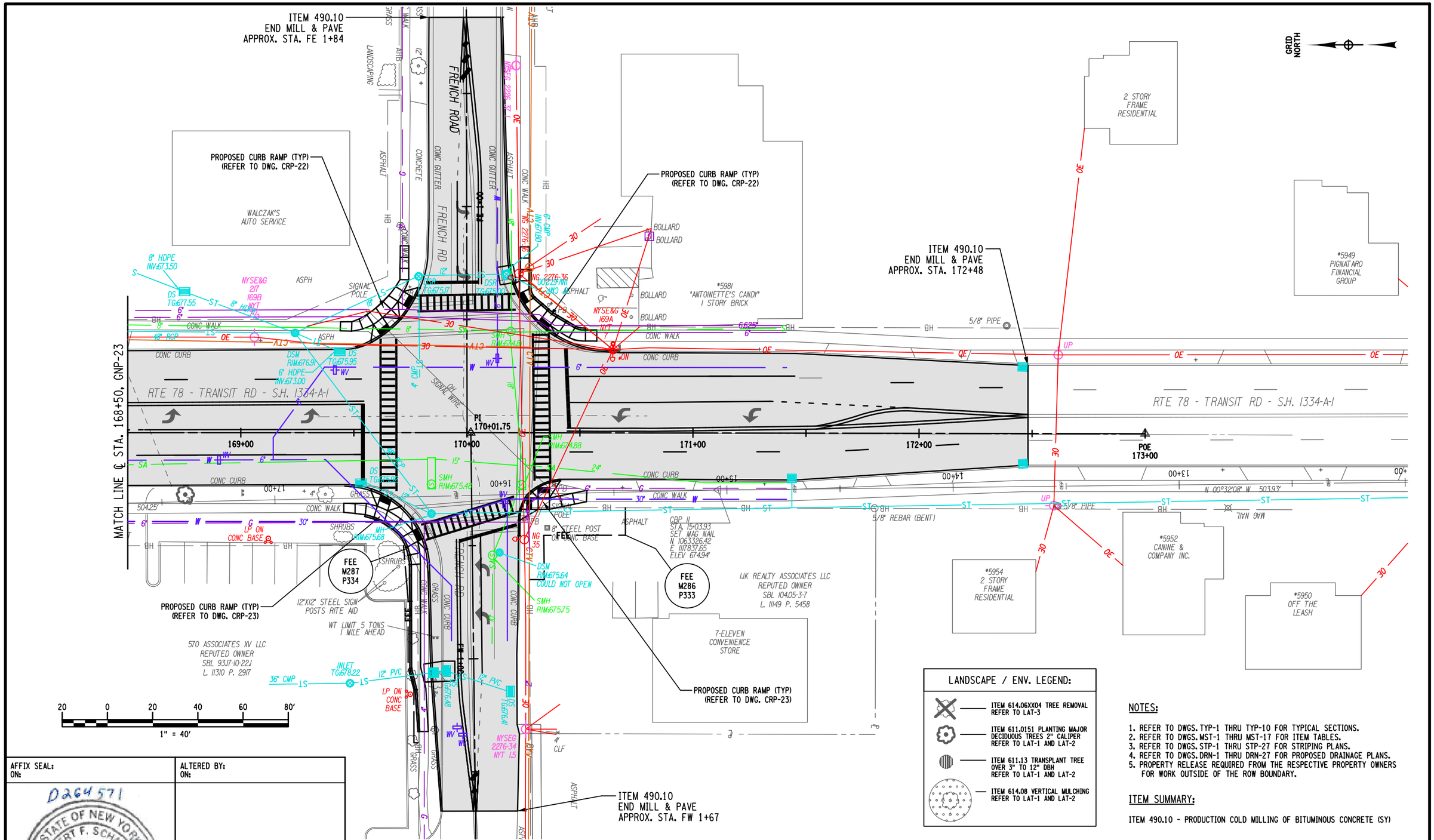

LANDSCAPE / ENV. LEGEND:

- ITEM 614.06XX04 TREE REMOVAL REFER TO LAT-3
- ITEM 611.0151 PLANTING MAJOR DECIDUOUS TREES 2" CALIPER REFER TO LAT-1 AND LAT-2
- ITEM 611.13 TRANSPLANT TREE OVER 3" TO 12" DBH REFER TO LAT-1 AND LAT-2
- ITEM 614.08 VERTICAL MULCHING REFER TO LAT-1 AND LAT-2

NOTES:

1. REFER TO DWGS. TYP-1 THRU TYP-10 FOR TYPICAL SECTIONS.
2. REFER TO DWGS. MST-1 THRU MST-17 FOR ITEM TABLES.
3. REFER TO DWGS. STP-1 THRU STP-27 FOR STRIPING PLANS.
4. REFER TO DWGS. DRN-1 THRU DRN-27 FOR PROPOSED DRAINAGE PLANS.
5. PROPERTY RELEASE REQUIRED FROM THE RESPECTIVE PROPERTY OWNERS FOR WORK OUTSIDE OF THE ROW BOUNDARY.

ITEM SUMMARY:

ITEM 490.10 - PRODUCTION COLD MILLING OF BITUMINOUS CONCRETE (SY)

AFFIX SEAL:
ON:

ALTERED BY:
ON:

D264571
STATE OF NEW YORK
ROBERT F. SCHALLER
NO. 082465
LICENSED PROFESSIONAL ENGINEER

AS-BUILT REVISIONS
DESCRIPTION OF ALTERATIONS:

NY 78, TRANSIT ROAD, S.H. 1334A-1	PIN 5813.61	BRIDGES	CULVERTS	ALL DIMENSIONS IN ft UNLESS OTHERWISE NOTED
FRENCH ROAD TO WEHRLE DRIVE	NY 78			GENERAL PLANS STA. 168+50 TO STA. 174+50
TOWNS OF CHEEKTOWAGA & LANCASTER	UTILITY QUALITY LEVEL D			
VILLAGE OF DEPEW				
COUNTY: ERIE REGION: 05				

CONTRACT NUMBER D264571

DRAWING NO. GNP-24
SHEET NO. 122

IT IS A VIOLATION OF LAW FOR ANY PERSON, UNLESS THEY ARE ACTING UNDER THE DIRECTION OF A LICENSED PROFESSIONAL ENGINEER, ARCHITECT, LANDSCAPE ARCHITECT, OR LAND SURVEYOR, TO ALTER AN ITEM IN ANY WAY. IF AN ITEM BEARING THE STAMP OF A LICENSED PROFESSIONAL IS ALTERED, THE ALTERING ENGINEER, ARCHITECT, LANDSCAPE ARCHITECT, OR LAND SURVEYOR SHALL STAMP THE DOCUMENT AND INCLUDE THE NOTATION "ALTERED BY" FOLLOWED BY THEIR SIGNATURE, THE DATE OF SUCH ALTERATION, AND A SPECIFIC DESCRIPTION OF THE ALTERATION.

NEW YORK STATE OF OPPORTUNITY. Department of Transportation

PROJECT MANAGER S. S. VAIDYA
CHECK R. F. SCHALLER
DRAFTING C. L. CRITES
DESIGN C. L. CRITES
JOB MANAGER R. F. SCHALLER
DESIGN SUPERVISOR S. S. VAIDYA
FILE NAME = 581361_CPH_HWY_GNP-24.dgn
DATE/TIME = 22-JUN-2021 12:42
USER = cortes

PROJECT MANAGER S. S. VAIDYA
CHECK R. F. SCHALLER
DRAFTING C. L. CRITES
CHECK R. F. SCHALLER
DESIGN C. L. CRITES
JOB MANAGER R. F. SCHALLER
DESIGN SUPERVISOR S. S. VAIDYA

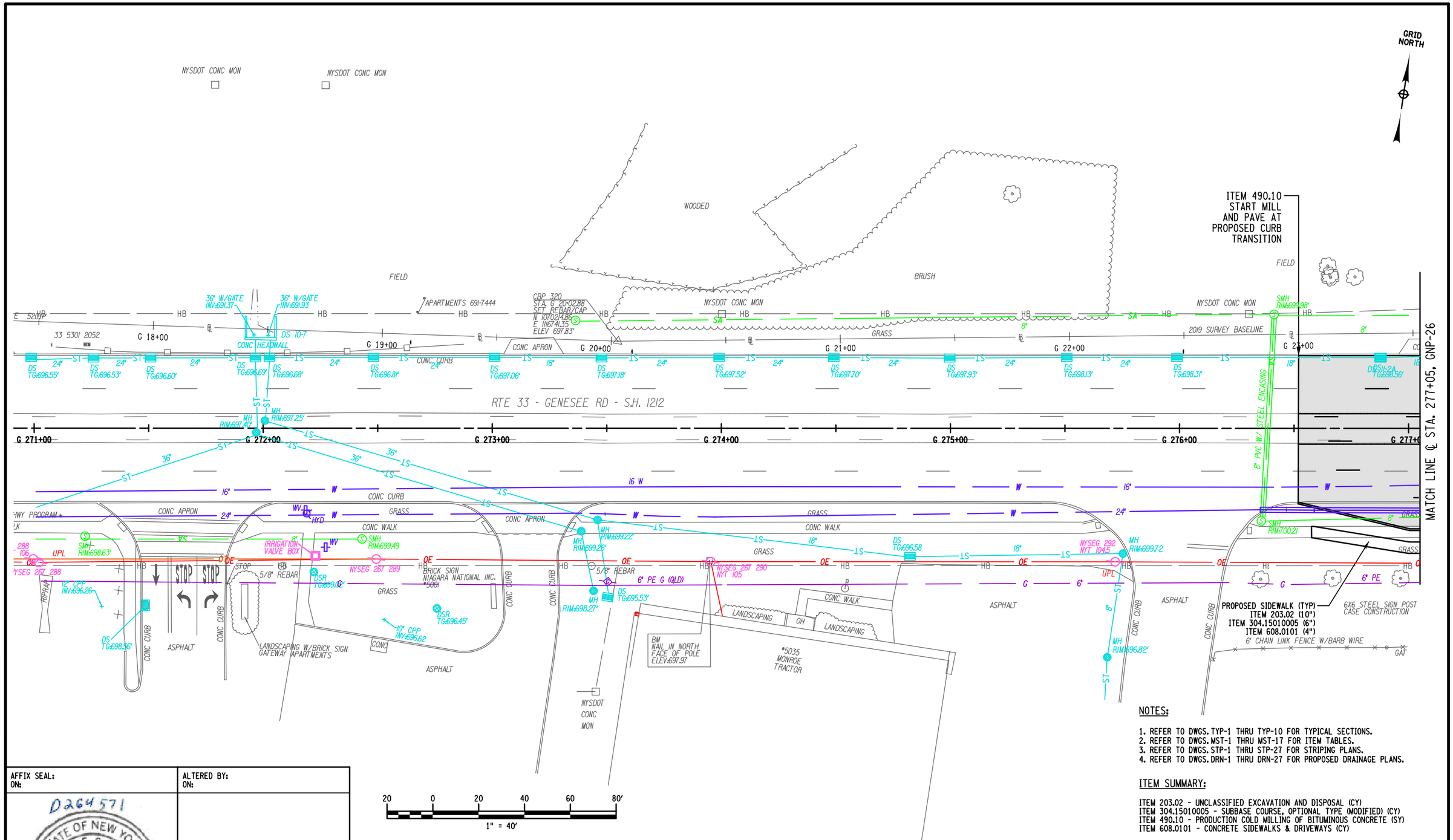

NOTES:

1. REFER TO DWGS. TYP-1 THRU TYP-10 FOR TYPICAL SECTIONS.
2. REFER TO DWGS. MST-1 THRU MST-17 FOR ITEM TABLES.
3. REFER TO DWGS. STP-1 THRU STP-27 FOR STRIPING PLANS.
4. REFER TO DWGS. DRN-1 THRU DRN-27 FOR PROPOSED DRAINAGE PLANS.

ITEM SUMMARY:

ITEM 203.02 - UNCLASSIFIED EXCAVATION AND DISPOSAL (CY)
ITEM 304.15010005 - SUBBASE COURSE, OPTIONAL TYPE (MODIFIED) (CY)
ITEM 490.10 - PRODUCTION COLD MILLING OF BITUMINOUS CONCRETE (SY)
ITEM 608.0101 - CONCRETE SIDEWALKS & DRIVEWAYS (CY)

AFFIX SEAL:
ON:

D264571
STATE OF NEW YORK
ROBERT F. SCHALLER
NO. 082465
LICENSED PROFESSIONAL ENGINEER

ALTERED BY:
ON:

AS-BUILT REVISIONS
DESCRIPTION OF ALTERATIONS:

NY 78, TRANSIT ROAD, S.H. 1334A-1
FRENCH ROAD TO WEHRLE DRIVE
TOWNS OF CHEEKTOWAGA & LANCASTER
VILLAGE OF DEPEW
COUNTY: ERIE REGION: 05

PIN 5813.61
NY 78
UTILITY QUALITY LEVEL D

BRIDGES

CULVERTS

ALL DIMENSIONS IN ft UNLESS OTHERWISE NOTED

GENERAL PLANS
SHEET 25 OF 27

CONTRACT NUMBER
D264571

DRAWING NO. GNP-25
SHEET NO. 123

IT IS A VIOLATION OF LAW FOR ANY PERSON, UNLESS THEY ARE ACTING UNDER THE DIRECTION OF A LICENSED PROFESSIONAL ENGINEER, ARCHITECT, LANDSCAPE ARCHITECT, OR LAND SURVEYOR, TO ALTER AN ITEM IN ANY WAY. IF AN ITEM BEARING THE STAMP OF A LICENSED PROFESSIONAL IS ALTERED, THE ALTERING ENGINEER, ARCHITECT, LANDSCAPE ARCHITECT, OR LAND SURVEYOR SHALL STAMP THE DOCUMENT AND INCLUDE THE NOTATION "ALTERED BY" FOLLOWED BY THEIR SIGNATURE, THE DATE OF SUCH ALTERATION, AND A SPECIFIC DESCRIPTION OF THE ALTERATION.

NEW YORK STATE OF OPPORTUNITY. Department of Transportation

FILE NAME = 581361_GPH_HWY_GNP-25.dgn
DATE/TIME = 22-JUN-2021 12:42
USER = cortes

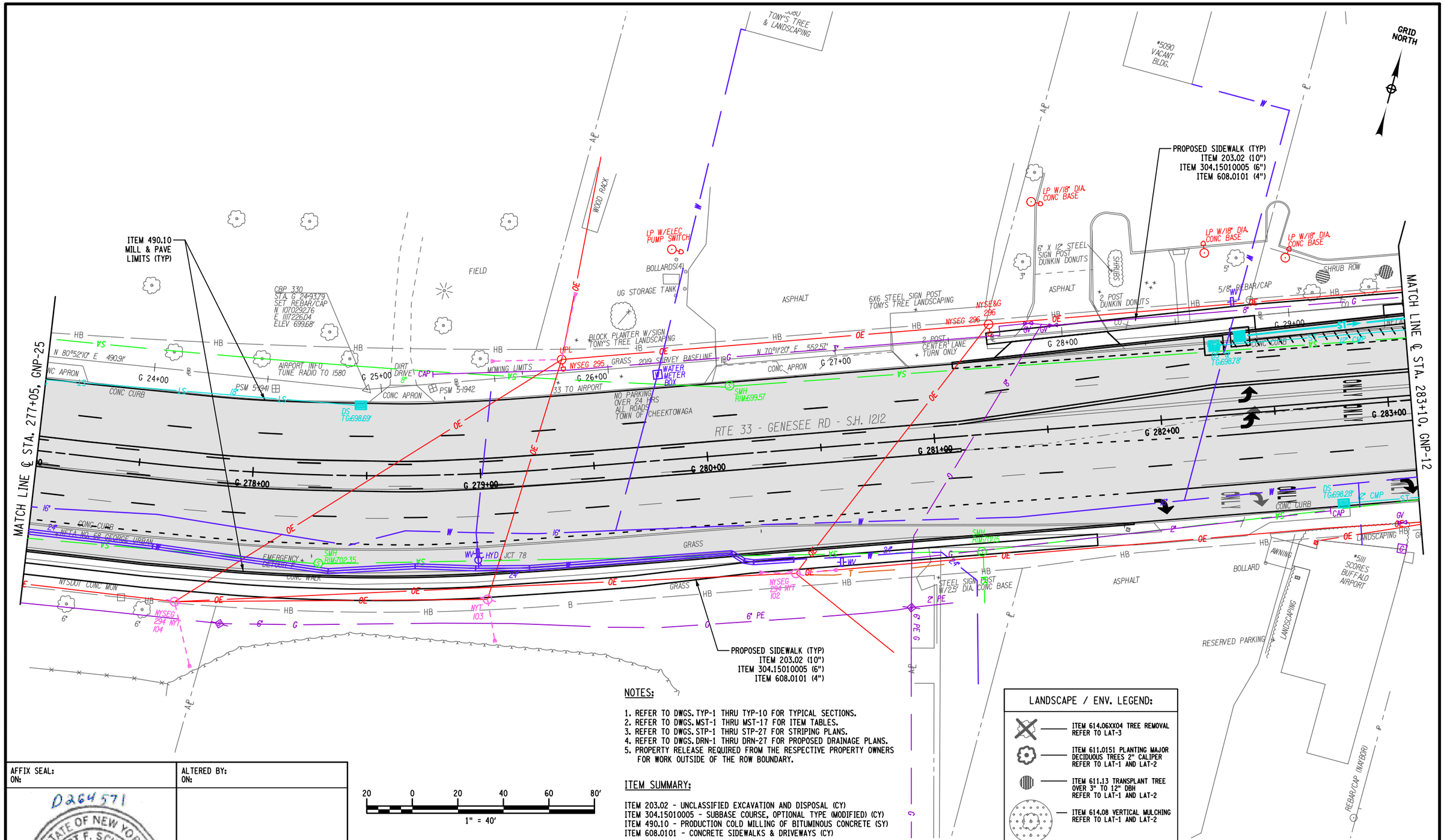

NOTES:

1. REFER TO DWGS. TYP-1 THRU TYP-10 FOR TYPICAL SECTIONS.
2. REFER TO DWGS. MST-1 THRU MST-17 FOR ITEM TABLES.
3. REFER TO DWGS. STP-1 THRU STP-27 FOR STRIPING PLANS.
4. REFER TO DWGS. DRN-1 THRU DRN-27 FOR PROPOSED DRAINAGE PLANS.
5. PROPERTY RELEASE REQUIRED FROM THE RESPECTIVE PROPERTY OWNERS FOR WORK OUTSIDE OF THE ROW BOUNDARY.

ITEM SUMMARY:

ITEM 203.02 - UNCLASSIFIED EXCAVATION AND DISPOSAL (CY)
ITEM 304.15010005 - SUBBASE COURSE, OPTIONAL TYPE (MODIFIED) (CY)
ITEM 490.10 - PRODUCTION COLD MILLING OF BITUMINOUS CONCRETE (SY)
ITEM 608.0101 - CONCRETE SIDEWALKS & DRIVEWAYS (CY)

20 0 20 40 60 80'
1" = 40'

LANDSCAPE / ENV. LEGEND:

- ITEM 614.06XX04 TREE REMOVAL REFER TO LAT-3
- ITEM 611.0151 PLANTING MAJOR DECIDUOUS TREES 2" CALIPER REFER TO LAT-1 AND LAT-2
- ITEM 611.13 TRANSPLANT TREE OVER 3" TO 12" DBH REFER TO LAT-1 AND LAT-2
- ITEM 614.08 VERTICAL MULCHING REFER TO LAT-1 AND LAT-2

AFFIX SEAL:
ON:

D264571
STATE OF NEW YORK
ROBERT F. SCHALLER
NO. 082465
LICENSED PROFESSIONAL ENGINEER

ALTERED BY:
ON:

AS-BUILT REVISIONS
DESCRIPTION OF ALTERATIONS:

NY 78, TRANSIT ROAD, S.H. 1334A-1
FRENCH ROAD TO WEHRLE DRIVE
TOWNS OF CHEEKTOWAGA & LANCASTER
VILLAGE OF DEPEW
COUNTY: ERIE REGION: 05

PIN 5813.61
NY 78
UTILITY QUALITY LEVEL D

BRIDGES

CULVERTS

ALL DIMENSIONS IN ft UNLESS OTHERWISE NOTED

GENERAL PLANS
STA. 277+.05 TO STA. 283+10

CONTRACT NUMBER
D264571

DRAWING NO. GNP-26
SHEET NO. 124

IT IS A VIOLATION OF LAW FOR ANY PERSON, UNLESS THEY ARE ACTING UNDER THE DIRECTION OF A LICENSED PROFESSIONAL ENGINEER, ARCHITECT, LANDSCAPE ARCHITECT, OR LAND SURVEYOR, TO ALTER AN ITEM IN ANY WAY. IF AN ITEM BEARING THE STAMP OF A LICENSED PROFESSIONAL IS ALTERED, THE ALTERING ENGINEER, ARCHITECT, LANDSCAPE ARCHITECT, OR LAND SURVEYOR SHALL STAMP THE DOCUMENT AND INCLUDE THE NOTATION "ALTERED BY" FOLLOWED BY THEIR SIGNATURE, THE DATE OF SUCH ALTERATION, AND A SPECIFIC DESCRIPTION OF THE ALTERATION.

NEW YORK STATE OF OPPORTUNITY. Department of Transportation

PROJECT MANAGER S. S. VAIDYA
CHECK R. F. SCHALLER
DESIGN C. L. CRITES
DRAFTING C. L. CRITES
JOB MANAGER R. F. SCHALLER
DESIGN SUPERVISOR S. S. VAIDYA

FILE NAME = 581361_CPH_HWY_GNP-26.dgn
DATE/TIME = 22-JUN-2021 12:42
USER = ccrites

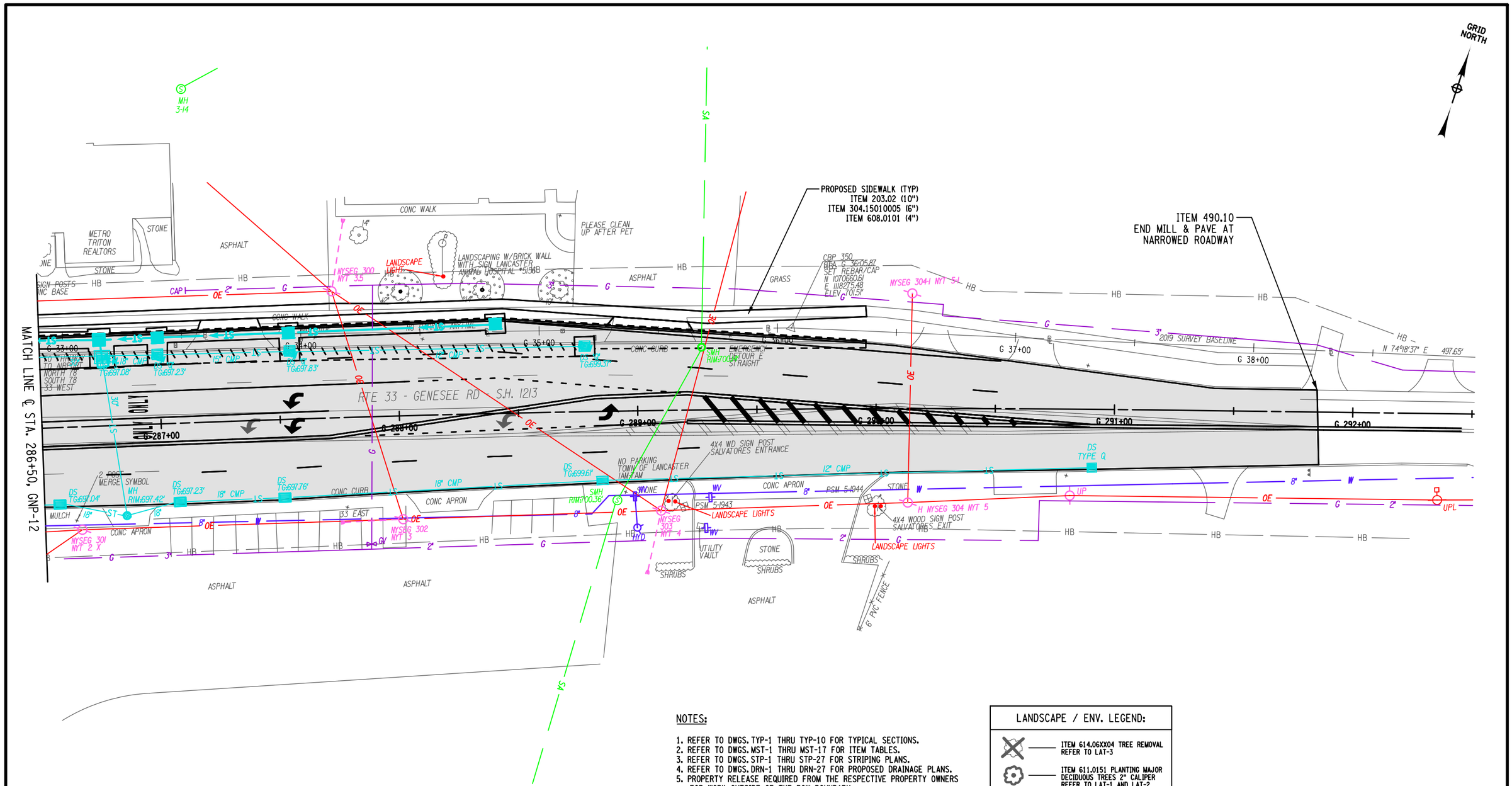

NOTES:

1. REFER TO DWGS. TYP-1 THRU TYP-10 FOR TYPICAL SECTIONS.
2. REFER TO DWGS. MST-1 THRU MST-17 FOR ITEM TABLES.
3. REFER TO DWGS. STP-1 THRU STP-27 FOR STRIPING PLANS.
4. REFER TO DWGS. DRN-1 THRU DRN-27 FOR PROPOSED DRAINAGE PLANS.
5. PROPERTY RELEASE REQUIRED FROM THE RESPECTIVE PROPERTY OWNERS FOR WORK OUTSIDE OF THE ROW BOUNDARY.

ITEM SUMMARY:

ITEM 203.02 - UNCLASSIFIED EXCAVATION AND DISPOSAL (CY)
ITEM 304.15010005 - SUBBASE COURSE, OPTIONAL TYPE (MODIFIED) (CY)
ITEM 490.10 - PRODUCTION COLD MILLING OF BITUMINOUS CONCRETE (SY)
ITEM 608.0101 - CONCRETE SIDEWALKS & DRIVEWAYS (CY)

20 0 20 40 60 80'
1" = 40'

LANDSCAPE / ENV. LEGEND:

- ITEM 614.06XX04 TREE REMOVAL REFER TO LAT-3
- ITEM 611.0151 PLANTING MAJOR DECIDUOUS TREES 2" CALIPER REFER TO LAT-1 AND LAT-2
- ITEM 611.13 TRANSPLANT TREE OVER 3" TO 12" DBH REFER TO LAT-1 AND LAT-2
- ITEM 614.08 VERTICAL MULCHING REFER TO LAT-1 AND LAT-2

AFFIX SEAL:
ON:

D264571
STATE OF NEW YORK
ROBERT F. SCHALLER
NO. 082465
LICENSED PROFESSIONAL ENGINEER

ALTERED BY:
ON:

AS-BUILT REVISIONS
DESCRIPTION OF ALTERATIONS:

NY 78, TRANSIT ROAD, S.H. 1334A-1
FRENCH ROAD TO WEHRLE DRIVE
TOWNS OF CHEEKTOWAGA & LANCASTER
VILLAGE OF DEPEW
COUNTY: ERIE REGION: 05

PIN 5813.61
NY 78
UTILITY QUALITY LEVEL D

BRIDGES

CULVERTS

ALL DIMENSIONS IN ft UNLESS OTHERWISE NOTED

GENERAL PLANS
STA. 286+50 TO STA. 292+50

CONTRACT NUMBER
D264571

DRAWING NO. GNP-27
SHEET NO. 125

IT IS A VIOLATION OF LAW FOR ANY PERSON, UNLESS THEY ARE ACTING UNDER THE DIRECTION OF A LICENSED PROFESSIONAL ENGINEER, ARCHITECT, LANDSCAPE ARCHITECT, OR LAND SURVEYOR, TO ALTER AN ITEM IN ANY WAY. IF AN ITEM BEARING THE STAMP OF A LICENSED PROFESSIONAL IS ALTERED, THE ALTERING ENGINEER, ARCHITECT, LANDSCAPE ARCHITECT, OR LAND SURVEYOR SHALL STAMP THE DOCUMENT AND INCLUDE THE NOTATION "ALTERED BY" FOLLOWED BY THEIR SIGNATURE, THE DATE OF SUCH ALTERATION, AND A SPECIFIC DESCRIPTION OF THE ALTERATION.

NEW YORK STATE OF OPPORTUNITY. Department of Transportation

PROJECT MANAGER S. S. VAIDYA
CHECK R. F. SCHALLER
DRAFTING C. L. CRITES
CHECK R. F. SCHALLER
DESIGN C. L. CRITES
JOB MANAGER R. F. SCHALLER
DESIGN SUPERVISOR S. S. VAIDYA

FILE NAME = 581361_CPH_HWY_GNP-27.dgn
DATE/TIME = 22-JUN-2021 12:42
USER = ccrites

DETAILS FOR GROUND MOUNTED OVERSIZED STREET NAME SIGNS D3-1

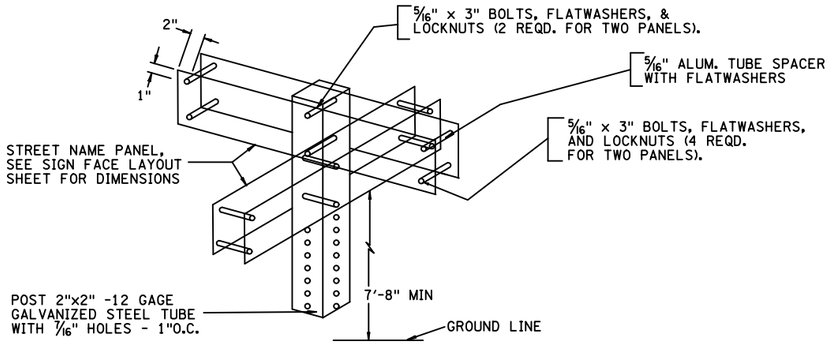

DETAIL FOR STANDARD STREET NAME SIGNS D3-1

NOTE: ALL FASTENERS AND HARDWARE SHALL CONFORM TO SPECIFICATION 715-16 & 730-22.

DETAILS FOR GROUND MOUNTED OVERSIZED STREET NAME SIGNS D3-1

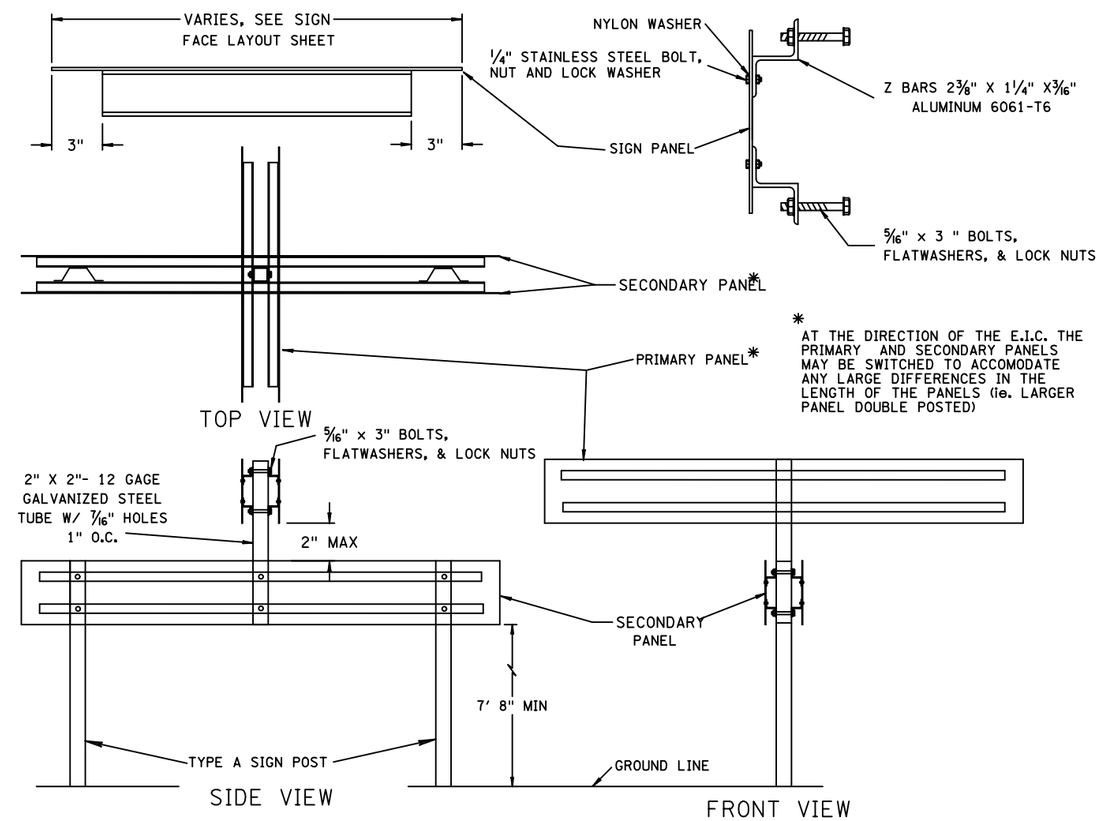

* AT THE DIRECTION OF THE E.I.C. THE PRIMARY AND SECONDARY PANELS MAY BE SWITCHED TO ACCOMODATE ANY LARGE DIFFERENCES IN THE LENGTH OF THE PANELS (ie. LARGER PANEL DOUBLE POSTED)

AFFIX SEAL: BRIAN C. DANKERT, P.E. ON: 22-JUN-2021 14:12	ALTERED BY: ON:

AS-BUILT REVISIONS
DESCRIPTION OF ALTERATIONS:

NY 78, TRANSIT ROAD, S.H. 1334A-1	PIN 5813.61 NY 78 UTILITY QUALITY LEVEL D	BRIDGES	CULVERTS	ALL DIMENSIONS IN ft UNLESS OTHERWISE NOTED	CONTRACT NUMBER D264571
FRENCH ROAD TO WEHRLE DRIVE				SIGNING DETAILS	
TOWNS OF CHEEKTOWAGA & LANCASTER					
VILLAGE OF DEPEW					DRAWING NO. SGD-1
COUNTY: ERIE REGION: 05					SHEET NO. 126

IT IS A VIOLATION OF LAW FOR ANY PERSON, UNLESS THEY ARE ACTING UNDER THE DIRECTION OF A LICENSED PROFESSIONAL ENGINEER, ARCHITECT, LANDSCAPE ARCHITECT, OR LAND SURVEYOR, TO ALTER AN ITEM IN ANY WAY. IF AN ITEM BEARING THE STAMP OF A LICENSED PROFESSIONAL IS ALTERED, THE ALTERING ENGINEER, ARCHITECT, LANDSCAPE ARCHITECT, OR LAND SURVEYOR SHALL STAMP THE DOCUMENT AND INCLUDE THE NOTATION "ALTERED BY" FOLLOWED BY THEIR SIGNATURE, THE DATE OF SUCH ALTERATION, AND A SPECIFIC DESCRIPTION OF THE ALTERATION.

NEW YORK STATE OF OPPORTUNITY. Department of Transportation

PROJECT MANAGER S. S. VAIDYA
CHECK BRIAN C. DANKERT
DRAFTING KEITH A. GORECKI
CHECK BRIAN C. DANKERT
DESIGN KEITH A. GORECKI
JOB MANAGER R. F. SCHALLER
DESIGN SUPERVISOR S. S. VAIDYA
FILE NAME = 581361_CPH_SGD_1.dgn
DATE/TIME = 22-JUN-2021 14:12
USER = kgorecki

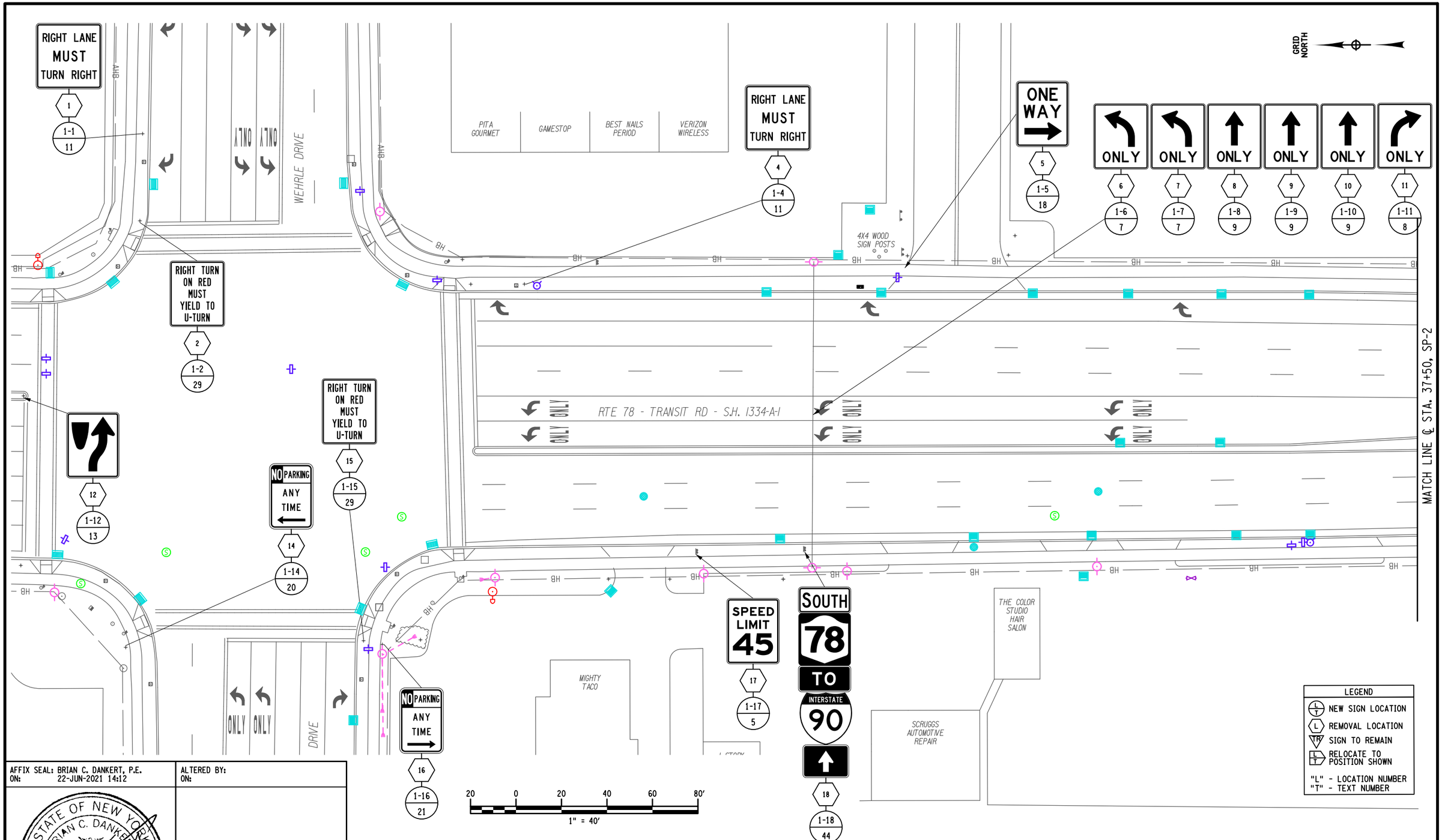

AFFIX SEAL: BRIAN C. DANKERT, P.E.
ON: 22-JUN-2021 14:12

ALTERED BY:
ON:

STATE OF NEW YORK · BRIAN C. DANKERT · No. 092443 · LICENSED PROFESSIONAL ENGINEER

AS-BUILT REVISIONS
DESCRIPTION OF ALTERATIONS:

NY 78, TRANSIT ROAD, S.H. 1334A-1
FRENCH ROAD TO WEHRLE DRIVE
TOWNS OF CHEEKTOWAGA & LANCASTER
VILLAGE OF DEPEW
COUNTY: ERIE REGION: 05

PIN 5813.61
NY 78
UTILITY QUALITY LEVEL D

BRIDGES

CULVERTS

ALL DIMENSIONS IN ft UNLESS OTHERWISE NOTED

SIGNING PLAN 1
STA. 32+31.85 TO STA. 37+50

CONTRACT NUMBER
D264571

DRAWING NO. SP-1
SHEET NO. 127

IT IS A VIOLATION OF LAW FOR ANY PERSON, UNLESS THEY ARE ACTING UNDER THE DIRECTION OF A LICENSED PROFESSIONAL ENGINEER, ARCHITECT, LANDSCAPE ARCHITECT, OR LAND SURVEYOR, TO ALTER AN ITEM IN ANY WAY. IF AN ITEM BEARING THE STAMP OF A LICENSED PROFESSIONAL IS ALTERED, THE ALTERING ENGINEER, ARCHITECT, LANDSCAPE ARCHITECT, OR LAND SURVEYOR SHALL STAMP THE DOCUMENT AND INCLUDE THE NOTATION "ALTERED BY" FOLLOWED BY THEIR SIGNATURE, THE DATE OF SUCH ALTERATION, AND A SPECIFIC DESCRIPTION OF THE ALTERATION.

NEW YORK STATE OF OPPORTUNITY. Department of Transportation

PROJECT MANAGER S. S. VAIDYA
CHECK B.C. DANKERT
DRAFTING K.A. GORECKI
CHECK B.C. DANKERT
DESIGN K.A. GORECKI
JOB MANAGER R. F. SCHALLER
DESIGN SUPERVISOR S. S. VAIDYA

FILE NAME = 581361_CPH_SP_01.dgn
DATE/TIME = 22-JUN-2021 14:12
USER = kgorecki

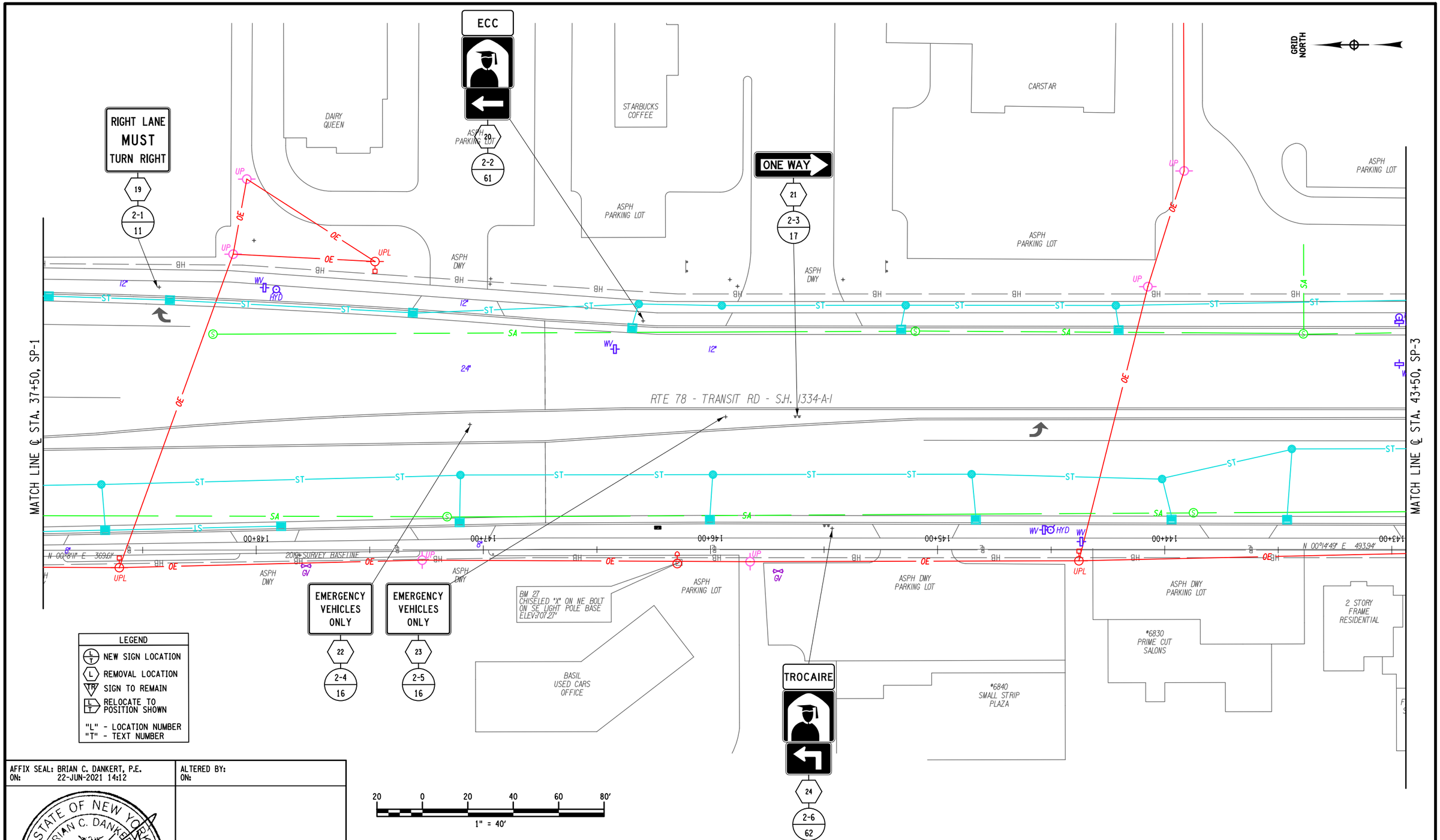

AFFIX SEAL: BRIAN C. DANKERT, P.E.
ON: 22-JUN-2021 14:12

ALTERED BY:
ON:

STATE OF NEW YORK · BRIAN C. DANKERT · No. 092443 · LICENSED PROFESSIONAL ENGINEER

AS-BUILT REVISIONS
DESCRIPTION OF ALTERATIONS:

NY 78, TRANSIT ROAD, S.H. 1334A-1
FRENCH ROAD TO WEHRLE DRIVE
TOWNS OF CHEEKTOWAGA & LANCASTER
VILLAGE OF DEPEW
COUNTY: ERIE REGION: 05

PIN 5813.61
NY 78
UTILITY QUALITY LEVEL D

BRIDGES

CULVERTS

ALL DIMENSIONS IN ft UNLESS OTHERWISE NOTED

SIGNING PLAN 2
STA. 37+50 TO STA. 43+50

CONTRACT NUMBER
D264571

DRAWING NO. SP-2
SHEET NO. 128

IT IS A VIOLATION OF LAW FOR ANY PERSON, UNLESS THEY ARE ACTING UNDER THE DIRECTION OF A LICENSED PROFESSIONAL ENGINEER, ARCHITECT, LANDSCAPE ARCHITECT, OR LAND SURVEYOR, TO ALTER AN ITEM IN ANY WAY. IF AN ITEM BEARING THE STAMP OF A LICENSED PROFESSIONAL IS ALTERED, THE ALTERING ENGINEER, ARCHITECT, LANDSCAPE ARCHITECT, OR LAND SURVEYOR SHALL STAMP THE DOCUMENT AND INCLUDE THE NOTATION "ALTERED BY" FOLLOWED BY THEIR SIGNATURE, THE DATE OF SUCH ALTERATION, AND A SPECIFIC DESCRIPTION OF THE ALTERATION.

NEW YORK STATE OF OPPORTUNITY. Department of Transportation

DESIGN SUPERVISOR S. S. VAIDYA
JOB MANAGER R. F. SCHALLER
DESIGN K.A. GORECKI
CHECK B.C. DANKERT
DRAFTING K.A. GORECKI
CHECK B.C. DANKERT
PROJECT MANAGER S. S. VAIDYA

FILE NAME = 581361_CPH_SP_02.dgn
DATE/TIME = 22-JUN-2021 14:12
USER = kgorecki

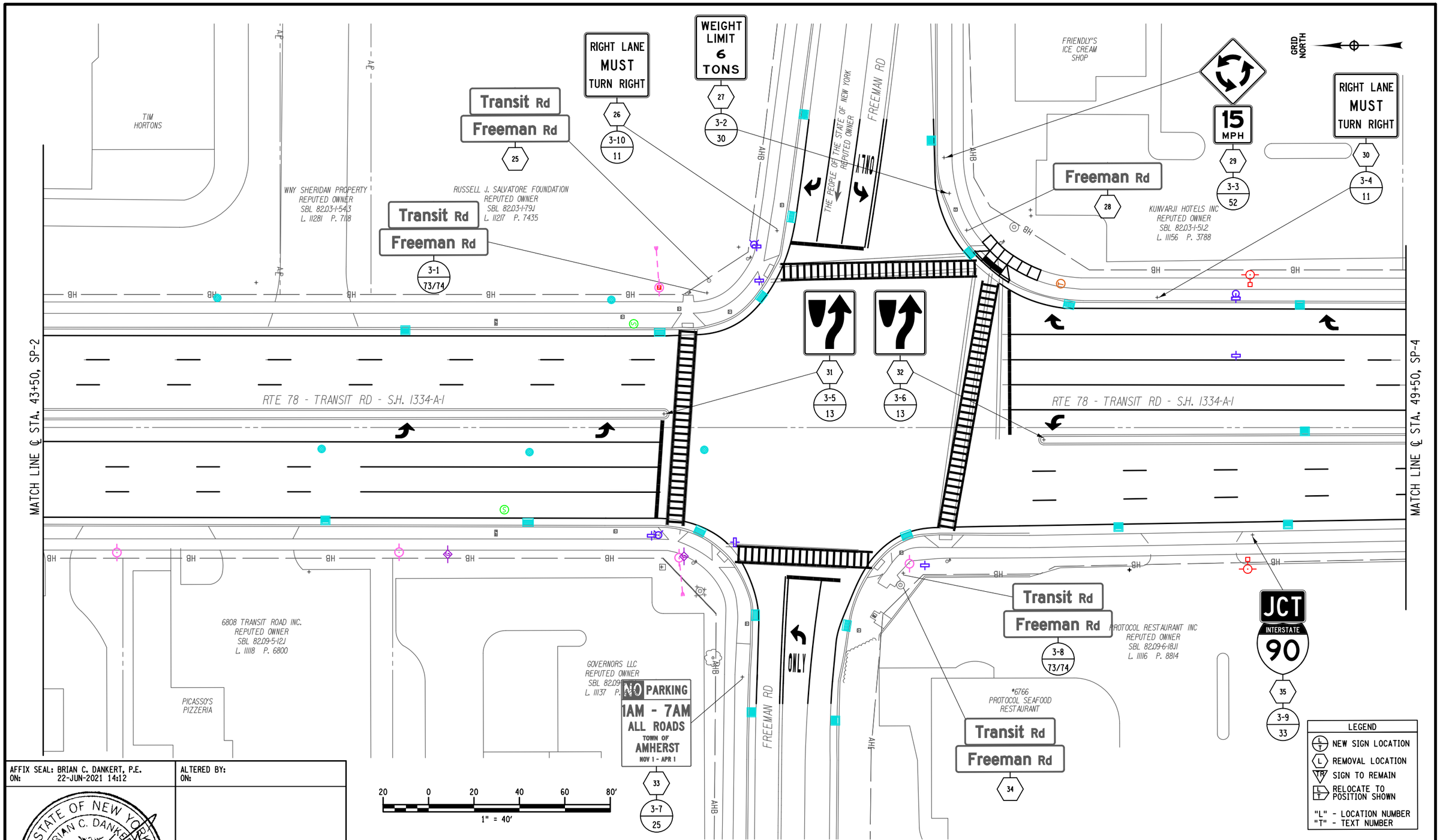

AFFIX SEAL: BRIAN C. DANKERT, P.E.
ON: 22-JUN-2021 14:12

ALTERED BY:
ON:

STATE OF NEW YORK · BRIAN C. DANKERT · No. 092413 · LICENSED PROFESSIONAL ENGINEER

AS-BUILT REVISIONS
DESCRIPTION OF ALTERATIONS:

NY 78, TRANSIT ROAD, S.H. 1334A-1
FRENCH ROAD TO WEHRLE DRIVE
TOWNS OF CHEEKTOWAGA & LANCASTER
VILLAGE OF DEPEW
COUNTY: ERIE REGION: 05

PIN 5813.61
NY 78
UTILITY QUALITY LEVEL D

BRIDGES

CULVERTS

ALL DIMENSIONS IN ft UNLESS OTHERWISE NOTED

SIGNING PLAN 3
STA. 43+50 TO STA. 49+50

CONTRACT NUMBER
D264571

DRAWING NO. SP-3
SHEET NO. 129

IT IS A VIOLATION OF LAW FOR ANY PERSON, UNLESS THEY ARE ACTING UNDER THE DIRECTION OF A LICENSED PROFESSIONAL ENGINEER, ARCHITECT, LANDSCAPE ARCHITECT, OR LAND SURVEYOR, TO ALTER AN ITEM IN ANY WAY. IF AN ITEM BEARING THE STAMP OF A LICENSED PROFESSIONAL IS ALTERED, THE ALTERING ENGINEER, ARCHITECT, LANDSCAPE ARCHITECT, OR LAND SURVEYOR SHALL STAMP THE DOCUMENT AND INCLUDE THE NOTATION "ALTERED BY" FOLLOWED BY THEIR SIGNATURE, THE DATE OF SUCH ALTERATION, AND A SPECIFIC DESCRIPTION OF THE ALTERATION.

NEW YORK STATE OF OPPORTUNITY. Department of Transportation

DESIGN SUPERVISOR S. S. VAIDYA
JOB MANAGER R. F. SCHALLER
DESIGN K.A. GORECKI
CHECK B.C. DANKERT
DRAFTING K.A. GORECKI
CHECK B.C. DANKERT
PROJECT MANAGER S. S. VAIDYA

FILE NAME = 581361_CPH_SP_03.dgn
DATE/TIME = 22-JUN-2021 14:12
USER = kgorecki

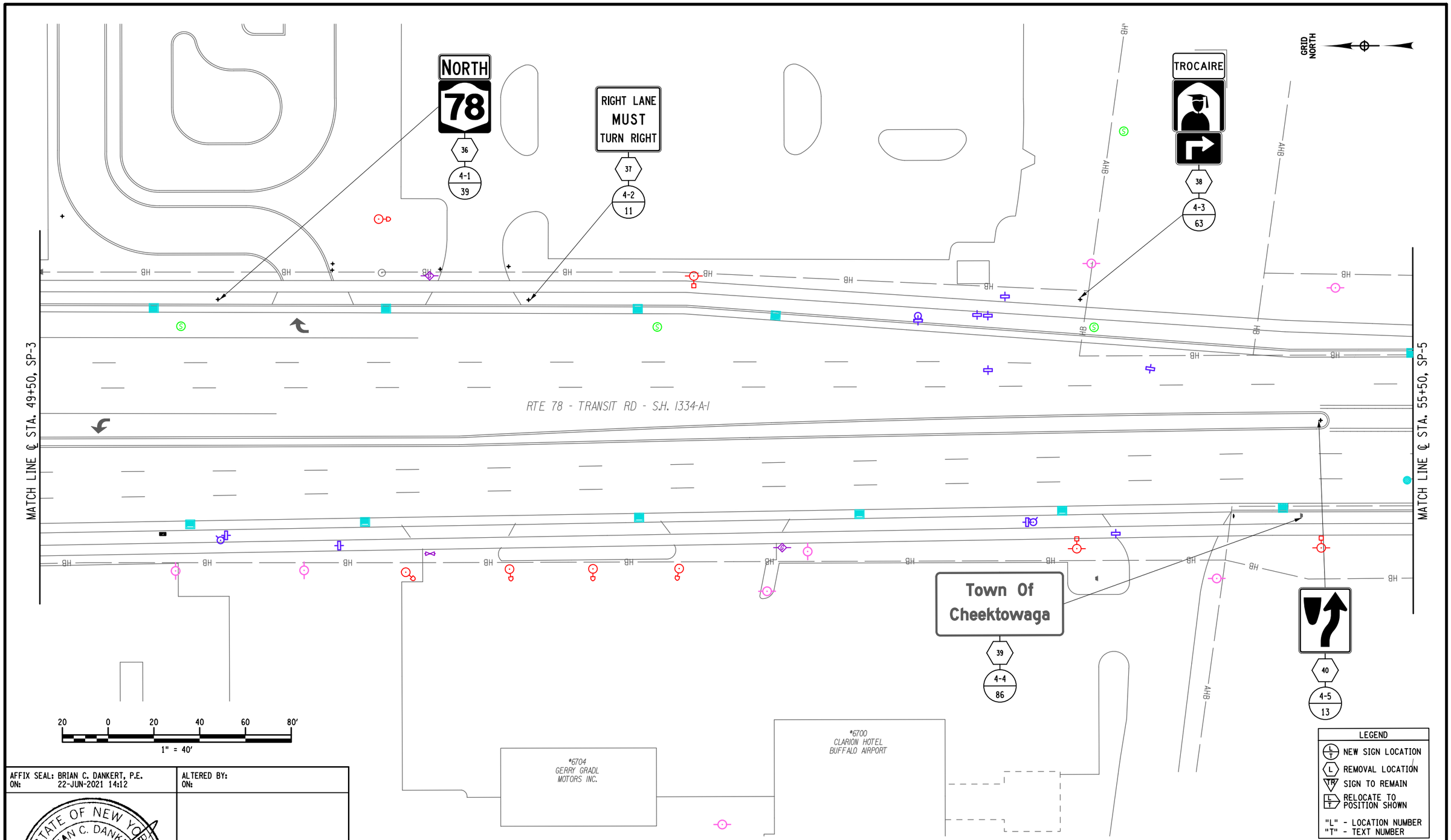

AFFIX SEAL: BRIAN C. DANKERT, P.E.
ON: 22-JUN-2021 14:12

ALTERED BY:
ON:

STATE OF NEW YORK · BRIAN C. DANKERT · No. 092443 · LICENSED PROFESSIONAL ENGINEER

AS-BUILT REVISIONS
DESCRIPTION OF ALTERATIONS:

NY 78, TRANSIT ROAD, S.H. 1334A-1
FRENCH ROAD TO WEHRLE DRIVE
TOWNS OF CHEEKTOWAGA & LANCASTER
VILLAGE OF DEPEW
COUNTY: ERIE REGION: 05

PIN 5813.61
NY 78
UTILITY QUALITY LEVEL D

BRIDGES

CULVERTS

ALL DIMENSIONS IN ft UNLESS OTHERWISE NOTED

SIGNING PLAN 4
STA. 49+50 TO STA. 55+50

CONTRACT NUMBER
D264571

DRAWING NO. SP-4
SHEET NO. 130

IT IS A VIOLATION OF LAW FOR ANY PERSON, UNLESS THEY ARE ACTING UNDER THE DIRECTION OF A LICENSED PROFESSIONAL ENGINEER, ARCHITECT, LANDSCAPE ARCHITECT, OR LAND SURVEYOR, TO ALTER AN ITEM IN ANY WAY. IF AN ITEM BEARING THE STAMP OF A LICENSED PROFESSIONAL IS ALTERED, THE ALTERING ENGINEER, ARCHITECT, LANDSCAPE ARCHITECT, OR LAND SURVEYOR SHALL STAMP THE DOCUMENT AND INCLUDE THE NOTATION "ALTERED BY" FOLLOWED BY THEIR SIGNATURE, THE DATE OF SUCH ALTERATION, AND A SPECIFIC DESCRIPTION OF THE ALTERATION.

NEW YORK STATE OF OPPORTUNITY. Department of Transportation

DESIGN SUPERVISOR S. S. VAIDYA
JOB MANAGER R. F. SCHALLER
DESIGN K.A. GORECKI
CHECK B.C. DANKERT
DRAFTING K.A. GORECKI
CHECK B.C. DANKERT
PROJECT MANAGER S. S. VAIDYA

FILE NAME = 581361_CPH_SP_04.dgn
DATE/TIME = 22-JUN-2021 14:12
USER = kgorecki

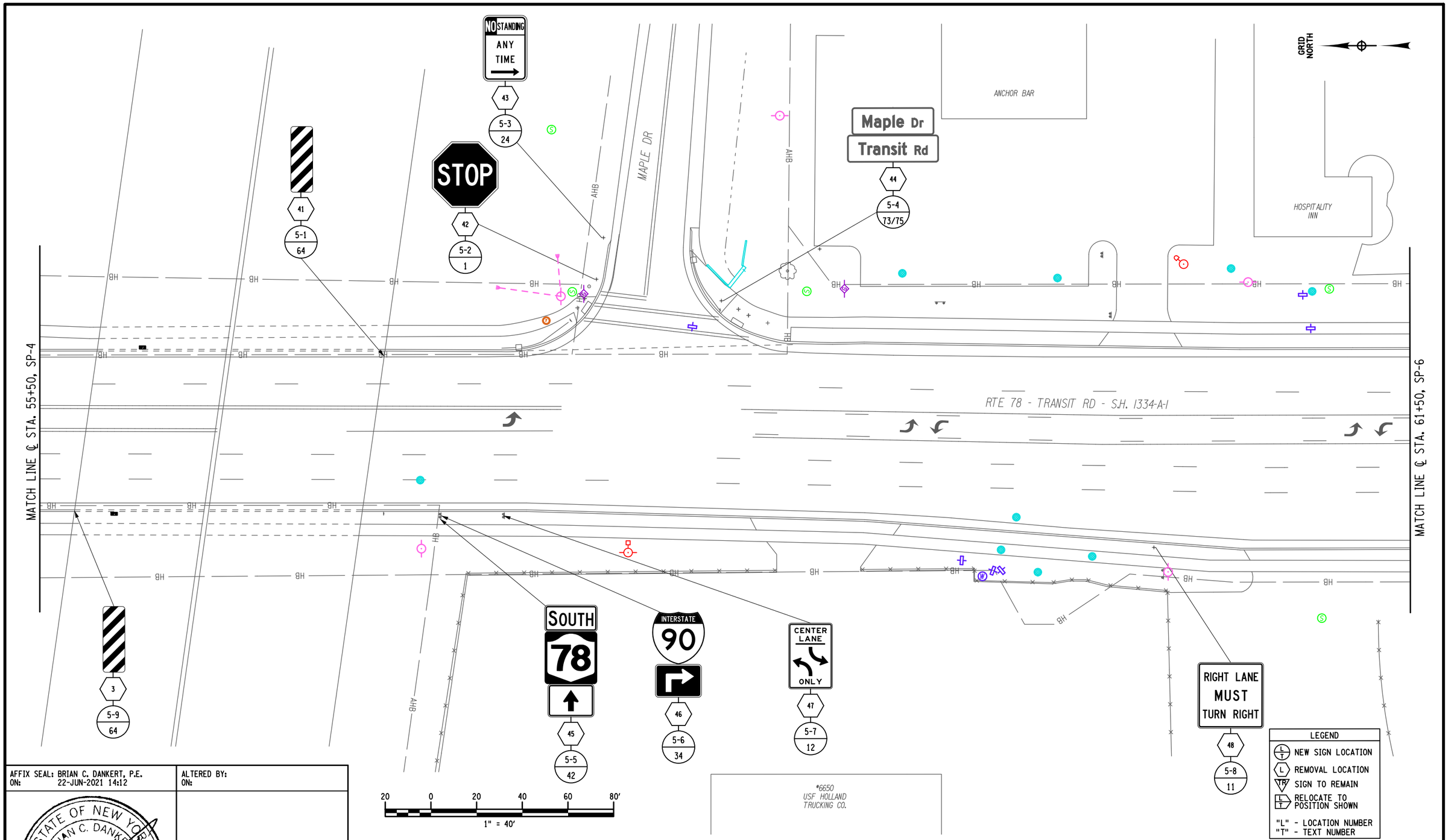

AFFIX SEAL: BRIAN C. DANKERT, P.E.
ON: 22-JUN-2021 14:12

STATE OF NEW YORK · BRIAN C. DANKERT · No. 092443 · LICENSED PROFESSIONAL ENGINEER

ALTERED BY:
ON:

AS-BUILT REVISIONS
DESCRIPTION OF ALTERATIONS:

NY 78, TRANSIT ROAD, S.H. 1334A-1	PIN 5813.61	BRIDGES	CULVERTS	ALL DIMENSIONS IN ft UNLESS OTHERWISE NOTED
FRENCH ROAD TO WEHRLE DRIVE	NY 78			SIGNING PLAN 5
TOWNS OF CHEEKTOWAGA & LANCASTER	UTILITY QUALITY LEVEL D			STA. 55+50 TO STA. 61+50
VILLAGE OF DEPEW				
COUNTY: ERIE REGION: 05				

CONTRACT NUMBER
D264571

DRAWING NO. SP-5
SHEET NO. 131

IT IS A VIOLATION OF LAW FOR ANY PERSON, UNLESS THEY ARE ACTING UNDER THE DIRECTION OF A LICENSED PROFESSIONAL ENGINEER, ARCHITECT, LANDSCAPE ARCHITECT, OR LAND SURVEYOR, TO ALTER AN ITEM IN ANY WAY. IF AN ITEM BEARING THE STAMP OF A LICENSED PROFESSIONAL IS ALTERED, THE ALTERING ENGINEER, ARCHITECT, LANDSCAPE ARCHITECT, OR LAND SURVEYOR SHALL STAMP THE DOCUMENT AND INCLUDE THE NOTATION "ALTERED BY" FOLLOWED BY THEIR SIGNATURE, THE DATE OF SUCH ALTERATION, AND A SPECIFIC DESCRIPTION OF THE ALTERATION.

NEW YORK STATE OF OPPORTUNITY. Department of Transportation

PROJECT MANAGER S. S. VAIDYA
CHECK B.C. DANKERT
DRAFTING K.A. GORECKI
CHECK B.C. DANKERT
DESIGN K.A. GORECKI
JOB MANAGER R. F. SCHALLER
DESIGN SUPERVISOR S. S. VAIDYA

FILE NAME = 581361_CPH_SP_05.dgn
DATE/TIME = 22-JUN-2021 14:12
USER = kgorecki

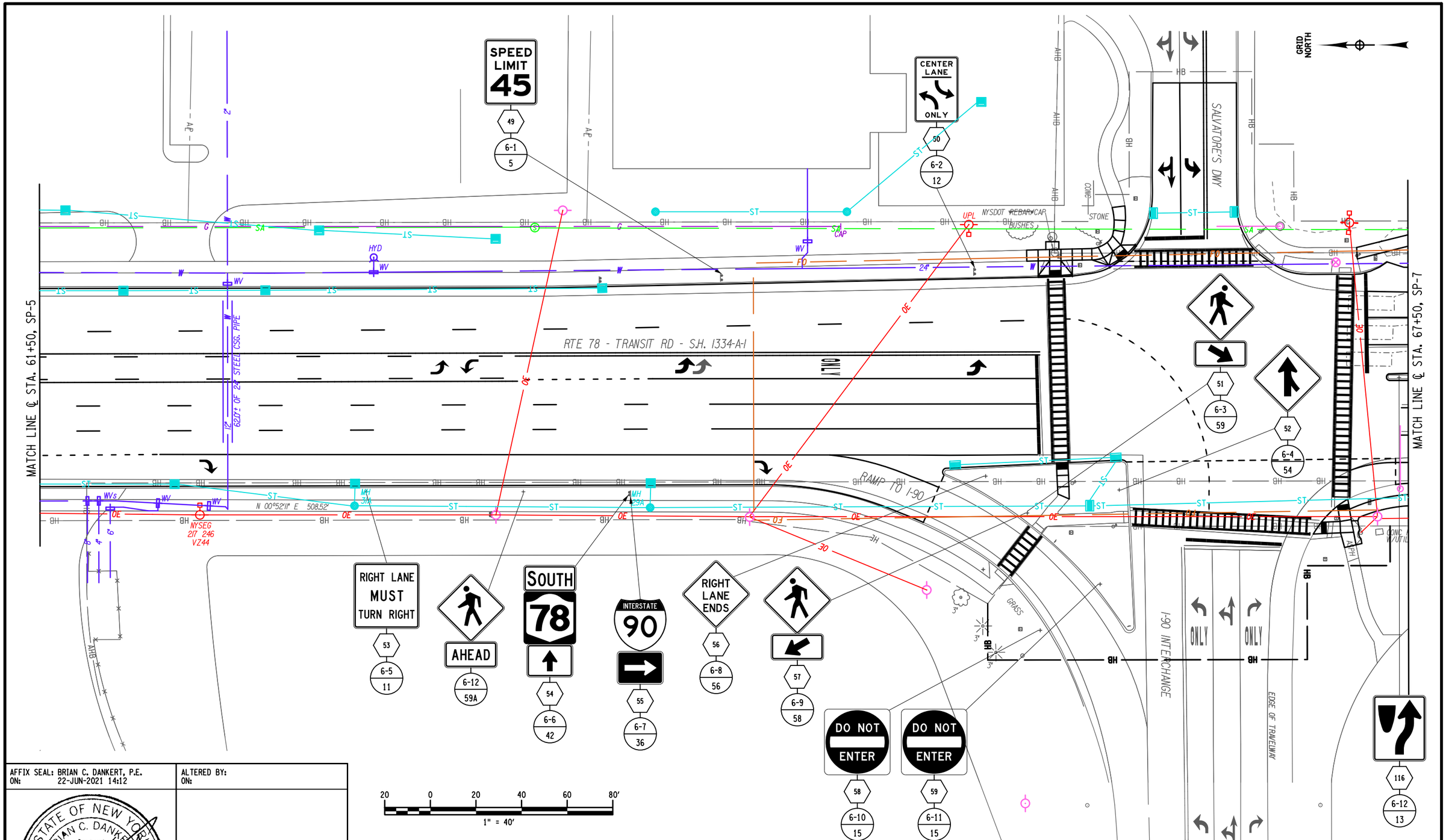

AFFIX SEAL: BRIAN C. DANKERT, P.E.
ON: 22-JUN-2021 14:12

ALTERED BY:
ON:

STATE OF NEW YORK · BRIAN C. DANKERT · LICENSED PROFESSIONAL ENGINEER · No. 092443

AS-BUILT REVISIONS
DESCRIPTION OF ALTERATIONS:

NY 78, TRANSIT ROAD, S.H. 1334A-1
FRENCH ROAD TO WEHRLE DRIVE
TOWNS OF CHEEKTOWAGA & LANCASTER
VILLAGE OF DEPEW
COUNTY: ERIE REGION: 05

PIN 5813.61
NY 78
UTILITY QUALITY LEVEL D

BRIDGES

CULVERTS

ALL DIMENSIONS IN ft UNLESS OTHERWISE NOTED

SIGNING PLAN 6
STA. 61+50 TO 67+50

CONTRACT NUMBER
D264571

DRAWING NO. SP-6
SHEET NO. 132

IT IS A VIOLATION OF LAW FOR ANY PERSON, UNLESS THEY ARE ACTING UNDER THE DIRECTION OF A LICENSED PROFESSIONAL ENGINEER, ARCHITECT, LANDSCAPE ARCHITECT, OR LAND SURVEYOR, TO ALTER AN ITEM IN ANY WAY. IF AN ITEM BEARING THE STAMP OF A LICENSED PROFESSIONAL IS ALTERED, THE ALTERING ENGINEER, ARCHITECT, LANDSCAPE ARCHITECT, OR LAND SURVEYOR SHALL STAMP THE DOCUMENT AND INCLUDE THE NOTATION "ALTERED BY" FOLLOWED BY THEIR SIGNATURE, THE DATE OF SUCH ALTERATION, AND A SPECIFIC DESCRIPTION OF THE ALTERATION.

NEW YORK STATE OF OPPORTUNITY. Department of Transportation

PROJECT MANAGER S. S. VAIDYA
CHECK B.C. DANKERT
DRAFTING K.A. GORECKI
CHECK B.C. DANKERT
DESIGN K.A. GORECKI
JOB MANAGER R. F. SCHALLER
DESIGN SUPERVISOR S. S. VAIDYA

FILE NAME = 581361_CPH_SP_06.dgn
DATE/TIME = 22-JUN-2021 14:12
USER = kgorecki

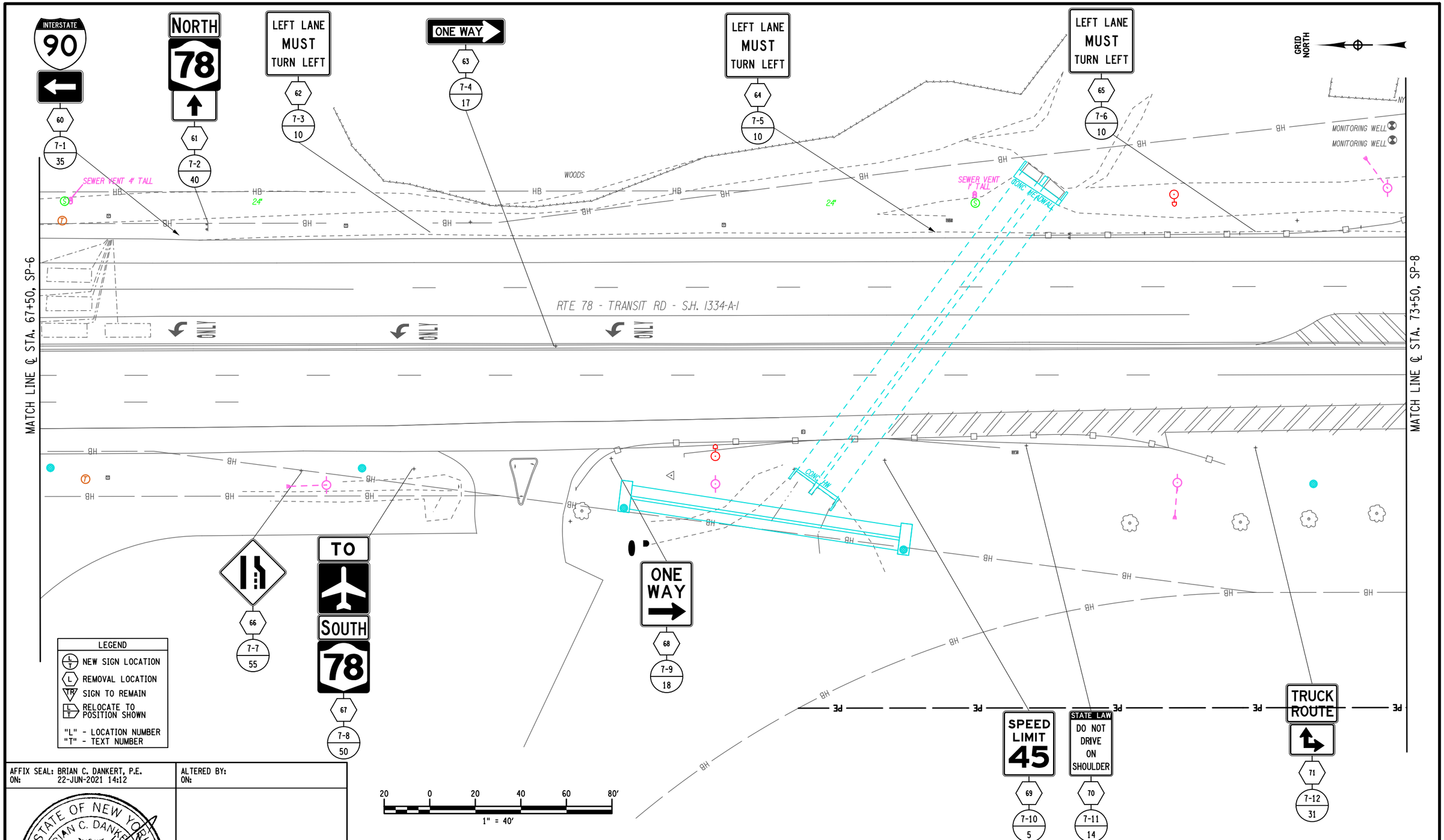

LEGEND

- NEW SIGN LOCATION
- REMOVAL LOCATION
- SIGN TO REMAIN
- RELOCATE TO POSITION SHOWN

"L" - LOCATION NUMBER
"T" - TEXT NUMBER

AFFIX SEAL: BRIAN C. DANKERT, P.E.
ON: 22-JUN-2021 14:12

ALTERED BY:
ON:

STATE OF NEW YORK · BRIAN C. DANKERT · No. 092443 · LICENSED PROFESSIONAL ENGINEER

AS-BUILT REVISIONS
DESCRIPTION OF ALTERATIONS:

NY 78, TRANSIT ROAD, S.H. 1334A-1
FRENCH ROAD TO WEHRLE DRIVE
TOWNS OF CHEEKTOWAGA & LANCASTER
VILLAGE OF DEPEW
COUNTY: ERIE REGION: 05

PIN 5813.61
NY 78
UTILITY QUALITY LEVEL D

BRIDGES

CULVERTS

ALL DIMENSIONS IN ft UNLESS OTHERWISE NOTED

SIGNING PLAN 7
STA. 67+50 TO STA. 73+50

CONTRACT NUMBER
D264571

DRAWING NO. SP-7
SHEET NO. 133

IT IS A VIOLATION OF LAW FOR ANY PERSON, UNLESS THEY ARE ACTING UNDER THE DIRECTION OF A LICENSED PROFESSIONAL ENGINEER, ARCHITECT, LANDSCAPE ARCHITECT, OR LAND SURVEYOR, TO ALTER AN ITEM IN ANY WAY. IF AN ITEM BEARING THE STAMP OF A LICENSED PROFESSIONAL IS ALTERED, THE ALTERING ENGINEER, ARCHITECT, LANDSCAPE ARCHITECT, OR LAND SURVEYOR SHALL STAMP THE DOCUMENT AND INCLUDE THE NOTATION "ALTERED BY" FOLLOWED BY THEIR SIGNATURE, THE DATE OF SUCH ALTERATION, AND A SPECIFIC DESCRIPTION OF THE ALTERATION.

NEW YORK STATE OF OPPORTUNITY. Department of Transportation

PROJECT MANAGER S. S. VAIDYA
CHECK B.C. DANKERT
DRAFTING K.A. GORECKI
CHECK B.C. DANKERT
DESIGN K.A. GORECKI
JOB MANAGER R. F. SCHALLER
DESIGN SUPERVISOR S. S. VAIDYA

FILE NAME = 581361_CPH_SP_07.dgn
DATE/TIME = 22-JUN-2021 14:12
USER = kgorecki

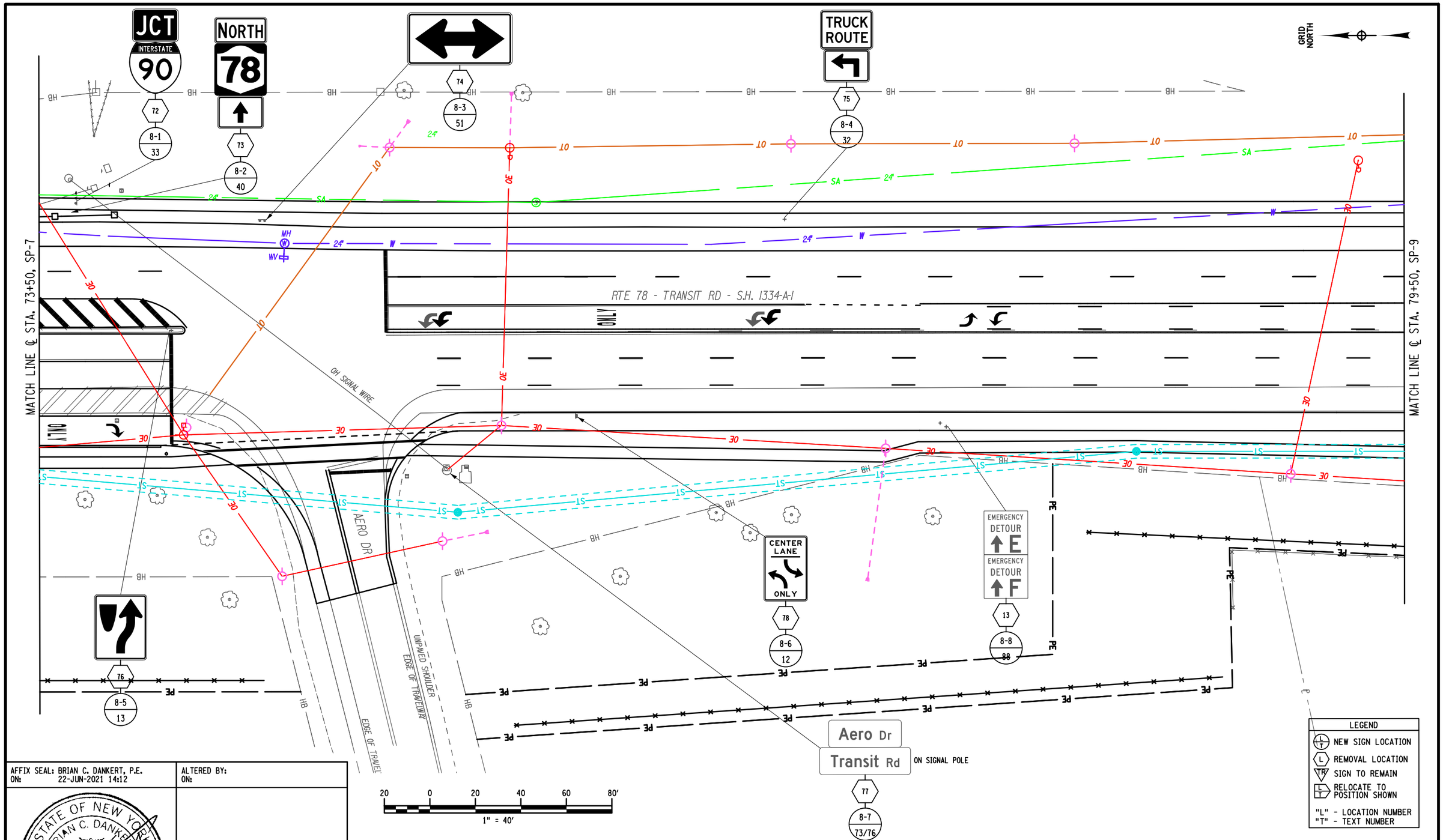

LEGEND

- NEW SIGN LOCATION
- REMOVAL LOCATION
- SIGN TO REMAIN
- RELOCATE TO POSITION SHOWN

"L" - LOCATION NUMBER
"T" - TEXT NUMBER

AFFIX SEAL: BRIAN C. DANKERT, P.E.
ON: 22-JUN-2021 14:12

ALTERED BY:
ON:

STATE OF NEW YORK · BRIAN C. DANKERT · No. 092443 · LICENSED PROFESSIONAL ENGINEER

AS-BUILT REVISIONS
DESCRIPTION OF ALTERATIONS:

NY 78, TRANSIT ROAD, S.H. 1334A-1
FRENCH ROAD TO WEHRLE DRIVE
TOWNS OF CHEEKTOWAGA & LANCASTER
VILLAGE OF DEPEW
COUNTY: ERIE REGION: 05

PIN 5813.61
NY 78
UTILITY QUALITY LEVEL D

BRIDGES

CULVERTS

ALL DIMENSIONS IN ft UNLESS OTHERWISE NOTED

SIGNING PLAN 8
STA. 73+50 TO STA. 79+50

CONTRACT NUMBER
D264571

DRAWING NO. SP-8
SHEET NO. 134

IT IS A VIOLATION OF LAW FOR ANY PERSON, UNLESS THEY ARE ACTING UNDER THE DIRECTION OF A LICENSED PROFESSIONAL ENGINEER, ARCHITECT, LANDSCAPE ARCHITECT, OR LAND SURVEYOR, TO ALTER AN ITEM IN ANY WAY. IF AN ITEM BEARING THE STAMP OF A LICENSED PROFESSIONAL IS ALTERED, THE ALTERING ENGINEER, ARCHITECT, LANDSCAPE ARCHITECT, OR LAND SURVEYOR SHALL STAMP THE DOCUMENT AND INCLUDE THE NOTATION "ALTERED BY" FOLLOWED BY THEIR SIGNATURE, THE DATE OF SUCH ALTERATION, AND A SPECIFIC DESCRIPTION OF THE ALTERATION.

NEW YORK STATE OF OPPORTUNITY. Department of Transportation

PROJECT MANAGER S. S. VAIDYA
CHECK B.C. DANKERT
DRAFTING K.A. GORECKI
CHECK B.C. DANKERT
DESIGN K.A. GORECKI
JOB MANAGER R. F. SCHALLER
DESIGN SUPERVISOR S. S. VAIDYA

FILE NAME = 581361_CPH_SP_08.dgn
DATE/TIME = 22-JUN-2021 14:12
USER = kgorecki

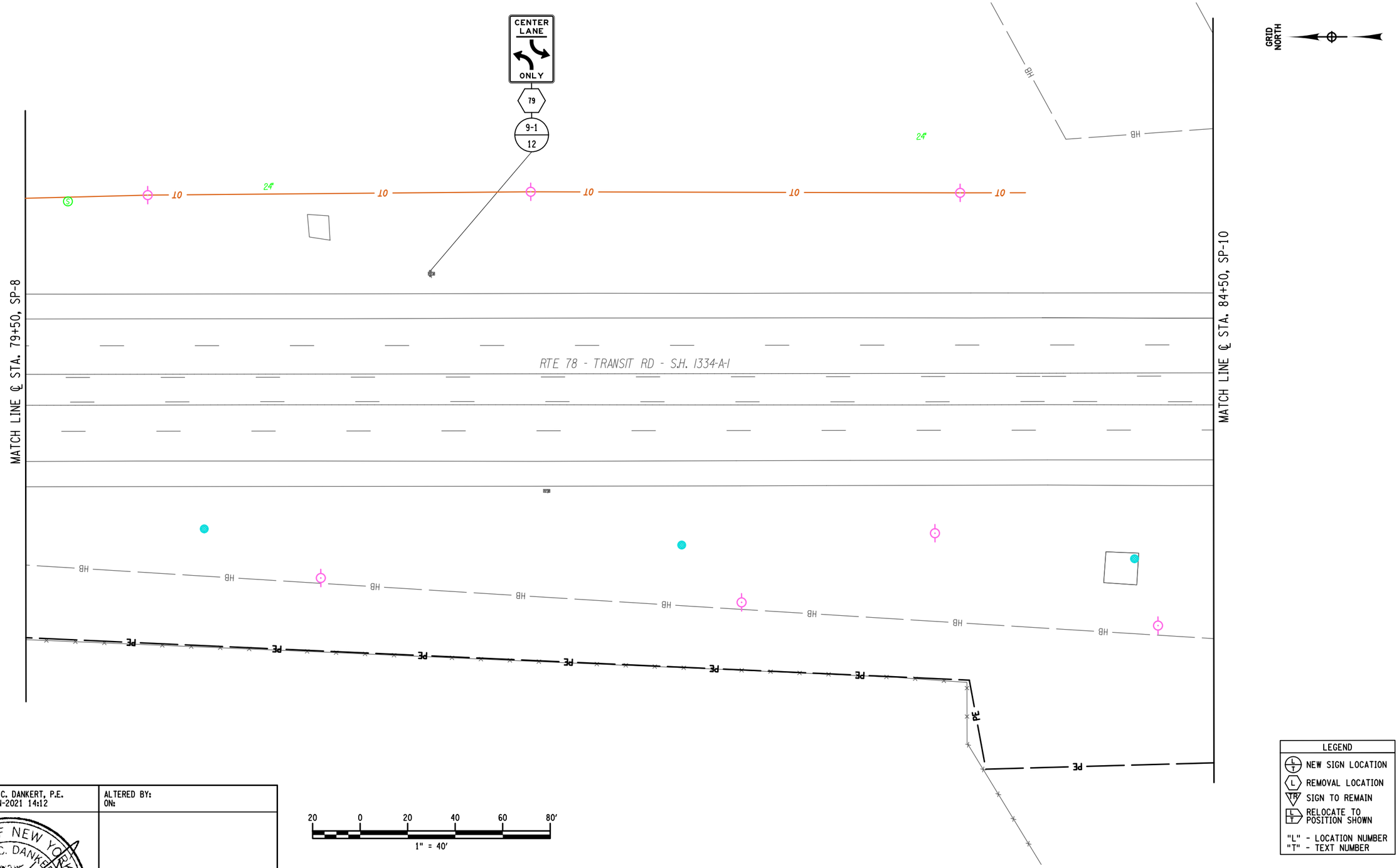

LEGEND

- NEW SIGN LOCATION
- REMOVAL LOCATION
- SIGN TO REMAIN
- RELOCATE TO POSITION SHOWN

"L" - LOCATION NUMBER
"T" - TEXT NUMBER

AFFIX SEAL: BRIAN C. DANKERT, P.E.
ON: 22-JUN-2021 14:12

STATE OF NEW YORK · BRIAN C. DANKERT · No. 092443 · LICENSED PROFESSIONAL ENGINEER

ALTERED BY:
ON:

AS-BUILT REVISIONS
DESCRIPTION OF ALTERATIONS:

NY 78, TRANSIT ROAD, S.H. 1334A-1
FRENCH ROAD TO WEHRLE DRIVE
TOWNS OF CHEEKTOWAGA & LANCASTER
VILLAGE OF DEPEW
COUNTY: ERIE REGION: 05

PIN 5813.61
NY 78
UTILITY QUALITY LEVEL D

BRIDGES

CULVERTS

ALL DIMENSIONS IN ft UNLESS OTHERWISE NOTED

SIGNING PLAN 9
STA. 79+50 TO STA. 84+50

CONTRACT NUMBER
D264571

DRAWING NO. SP-9
SHEET NO. 135

IT IS A VIOLATION OF LAW FOR ANY PERSON, UNLESS THEY ARE ACTING UNDER THE DIRECTION OF A LICENSED PROFESSIONAL ENGINEER, ARCHITECT, LANDSCAPE ARCHITECT, OR LAND SURVEYOR, TO ALTER AN ITEM IN ANY WAY. IF AN ITEM BEARING THE STAMP OF A LICENSED PROFESSIONAL IS ALTERED, THE ALTERING ENGINEER, ARCHITECT, LANDSCAPE ARCHITECT, OR LAND SURVEYOR SHALL STAMP THE DOCUMENT AND INCLUDE THE NOTATION "ALTERED BY" FOLLOWED BY THEIR SIGNATURE, THE DATE OF SUCH ALTERATION, AND A SPECIFIC DESCRIPTION OF THE ALTERATION.

NEW YORK STATE OF OPPORTUNITY. Department of Transportation

PROJECT MANAGER S. S. VAIDYA
CHECK B.C. DANKERT
DRAFTING K.A. GORECKI
CHECK B.C. DANKERT
DESIGN K.A. GORECKI
JOB MANAGER R. F. SCHALLER
DESIGN SUPERVISOR S. S. VAIDYA

FILE NAME = 581361_CPH_SP_09.dgn
DATE/TIME = 22-JUN-2021 14:12
USER = kgorecki

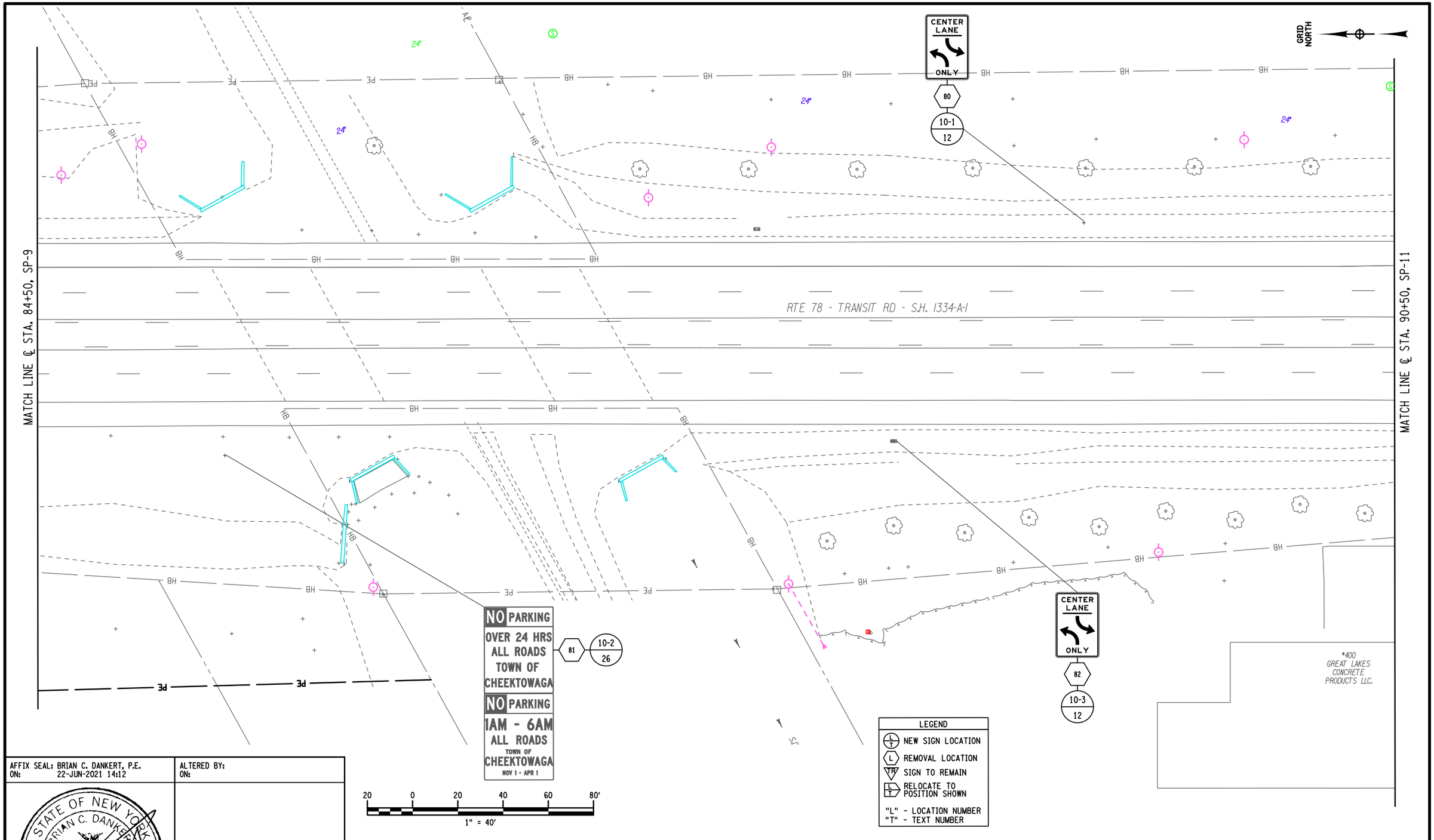

AFFIX SEAL: BRIAN C. DANKERT, P.E.
ON: 22-JUN-2021 14:12

ALTERED BY:
ON:

STATE OF NEW YORK
BRIAN C. DANKERT
No. 092443
LICENSED PROFESSIONAL ENGINEER

AS-BUILT REVISIONS
DESCRIPTION OF ALTERATIONS:

NY 78, TRANSIT ROAD, S.H. 1334A-1
FRENCH ROAD TO WEHRLE DRIVE
TOWNS OF CHEEKTOWAGA & LANCASTER
VILLAGE OF DEPEW
COUNTY: ERIE REGION: 05

PIN 5813.61
NY 78
UTILITY QUALITY LEVEL D

BRIDGES

CULVERTS

ALL DIMENSIONS IN ft UNLESS OTHERWISE NOTED

SIGNING PLAN 10
STA. 84+50 TO STA. 90+50

CONTRACT NUMBER
D264571

DRAWING NO. SP-10
SHEET NO. 136

IT IS A VIOLATION OF LAW FOR ANY PERSON, UNLESS THEY ARE ACTING UNDER THE DIRECTION OF A LICENSED PROFESSIONAL ENGINEER, ARCHITECT, LANDSCAPE ARCHITECT, OR LAND SURVEYOR, TO ALTER AN ITEM IN ANY WAY. IF AN ITEM BEARING THE STAMP OF A LICENSED PROFESSIONAL IS ALTERED, THE ALTERING ENGINEER, ARCHITECT, LANDSCAPE ARCHITECT, OR LAND SURVEYOR SHALL STAMP THE DOCUMENT AND INCLUDE THE NOTATION "ALTERED BY" FOLLOWED BY THEIR SIGNATURE, THE DATE OF SUCH ALTERATION, AND A SPECIFIC DESCRIPTION OF THE ALTERATION.

NEW YORK STATE OF OPPORTUNITY. Department of Transportation

DESIGN SUPERVISOR S. S. VAIDYA
JOB MANAGER R. F. SCHALLER
DESIGN K.A. GORECKI
CHECK B.C. DANKERT
DRAFTING K.A. GORECKI
CHECK B.C. DANKERT
PROJECT MANAGER S. S. VAIDYA

FILE NAME = 581361_CPH_SP_10.dgn
DATE/TIME = 22-JUN-2021 14:12
USER = kgorecki

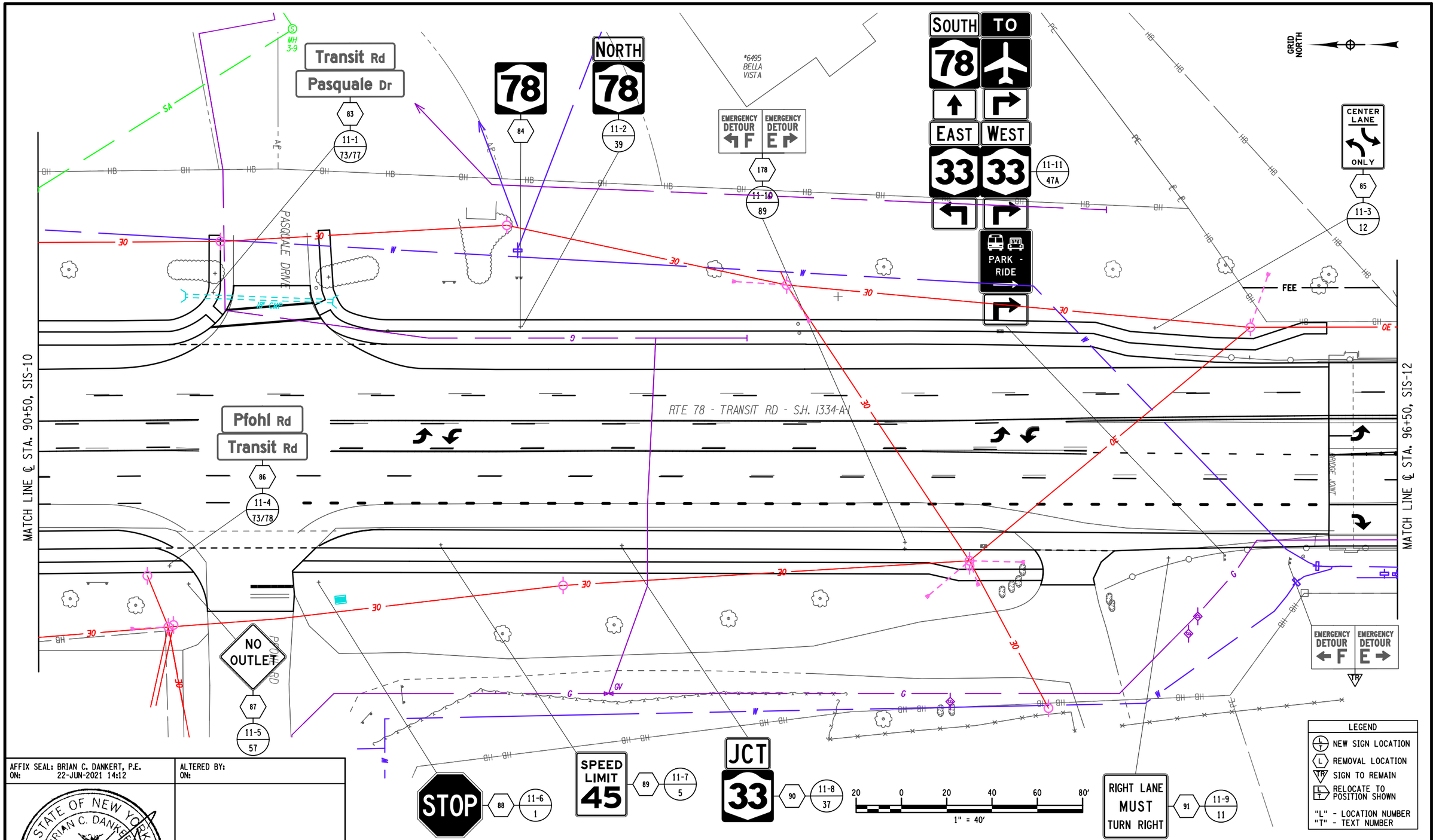

AFFIX SEAL: BRIAN C. DANKERT, P.E.
ON: 22-JUN-2021 14:12

ALTERED BY:
ON:

STATE OF NEW YORK · BRIAN C. DANKERT · No. 092443 · LICENSED PROFESSIONAL ENGINEER

AS-BUILT REVISIONS
DESCRIPTION OF ALTERATIONS:

NY 78, TRANSIT ROAD, S.H. 1334A-1
FRENCH ROAD TO WEHRLE DRIVE
TOWNS OF CHEEKTOWAGA & LANCASTER
VILLAGE OF DEPEW
COUNTY: ERIE REGION: 05

PIN 5813.61
NY 78
UTILITY QUALITY LEVEL D

BRIDGES

CULVERTS

ALL DIMENSIONS IN ft UNLESS OTHERWISE NOTED

SIGNING PLAN 11
STA. 90+50 TO STA. 96+50

CONTRACT NUMBER
D264571

DRAWING NO. SP-11
SHEET NO. 137

IT IS A VIOLATION OF LAW FOR ANY PERSON, UNLESS THEY ARE ACTING UNDER THE DIRECTION OF A LICENSED PROFESSIONAL ENGINEER, ARCHITECT, LANDSCAPE ARCHITECT, OR LAND SURVEYOR, TO ALTER AN ITEM IN ANY WAY. IF AN ITEM BEARING THE STAMP OF A LICENSED PROFESSIONAL IS ALTERED, THE ALTERING ENGINEER, ARCHITECT, LANDSCAPE ARCHITECT, OR LAND SURVEYOR SHALL STAMP THE DOCUMENT AND INCLUDE THE NOTATION "ALTERED BY" FOLLOWED BY THEIR SIGNATURE, THE DATE OF SUCH ALTERATION, AND A SPECIFIC DESCRIPTION OF THE ALTERATION.

NEW YORK STATE OF OPPORTUNITY. Department of Transportation

PROJECT MANAGER S. S. VAIDYA
CHECK B.C. DANKERT
DRAFTING K.A. GORECKI
CHECK B.C. DANKERT
DESIGN K.A. GORECKI
JOB MANAGER R. F. SCHALLER
DESIGN SUPERVISOR S. S. VAIDYA

FILE NAME = 581361_CPH_SP_11.dgn
DATE/TIME = 22-JUN-2021 14:12
USER = kgorecki

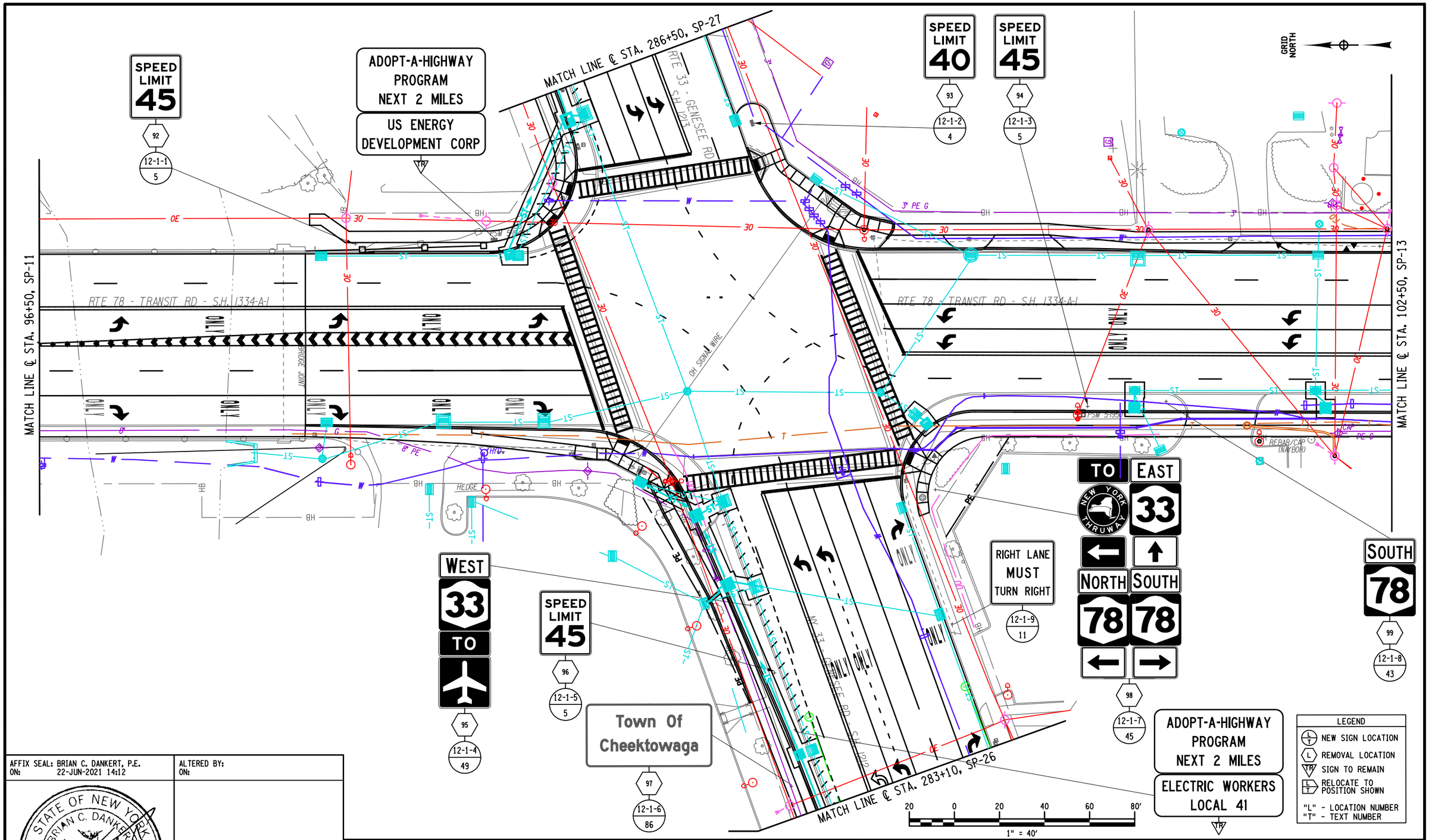

AFFIX SEAL: BRIAN C. DANKERT, P.E.
ON: 22-JUN-2021 14:12

ALTERED BY:
ON:

STATE OF NEW YORK · BRIAN C. DANKERT · No. 092443 · LICENSED PROFESSIONAL ENGINEER

AS-BUILT REVISIONS
DESCRIPTION OF ALTERATIONS:

NY 78, TRANSIT ROAD, S.H. 1334A-1
FRENCH ROAD TO WEHRLE DRIVE
TOWNS OF CHEEKTOWAGA & LANCASTER
VILLAGE OF DEPEW
COUNTY: ERIE REGION: 05

PIN 5813.61
NY 78
UTILITY QUALITY LEVEL D

BRIDGES

CULVERTS

ALL DIMENSIONS IN ft UNLESS OTHERWISE NOTED

SIGNING PLAN 12
STA. 96+50 TO STA. 102+50

CONTRACT NUMBER
D264571

DRAWING NO. SP-12-1
SHEET NO. 138

IT IS A VIOLATION OF LAW FOR ANY PERSON, UNLESS THEY ARE ACTING UNDER THE DIRECTION OF A LICENSED PROFESSIONAL ENGINEER, ARCHITECT, LANDSCAPE ARCHITECT, OR LAND SURVEYOR, TO ALTER AN ITEM IN ANY WAY. IF AN ITEM BEARING THE STAMP OF A LICENSED PROFESSIONAL IS ALTERED, THE ALTERING ENGINEER, ARCHITECT, LANDSCAPE ARCHITECT, OR LAND SURVEYOR SHALL STAMP THE DOCUMENT AND INCLUDE THE NOTATION "ALTERED BY" FOLLOWED BY THEIR SIGNATURE, THE DATE OF SUCH ALTERATION, AND A SPECIFIC DESCRIPTION OF THE ALTERATION.

NEW YORK STATE OF OPPORTUNITY. Department of Transportation

PROJECT MANAGER S. S. VAIDYA
CHECK B.C. DANKERT
DRAFTING K.A. GORECKI
CHECK B.C. DANKERT
DESIGN K.A. GORECKI
JOB MANAGER R. F. SCHALLER
DESIGN SUPERVISOR S. S. VAIDYA

FILE NAME = 581361_CPH_SP_12.dgn
DATE/TIME = 22-JUN-2021 14:12
USER = kgorecki

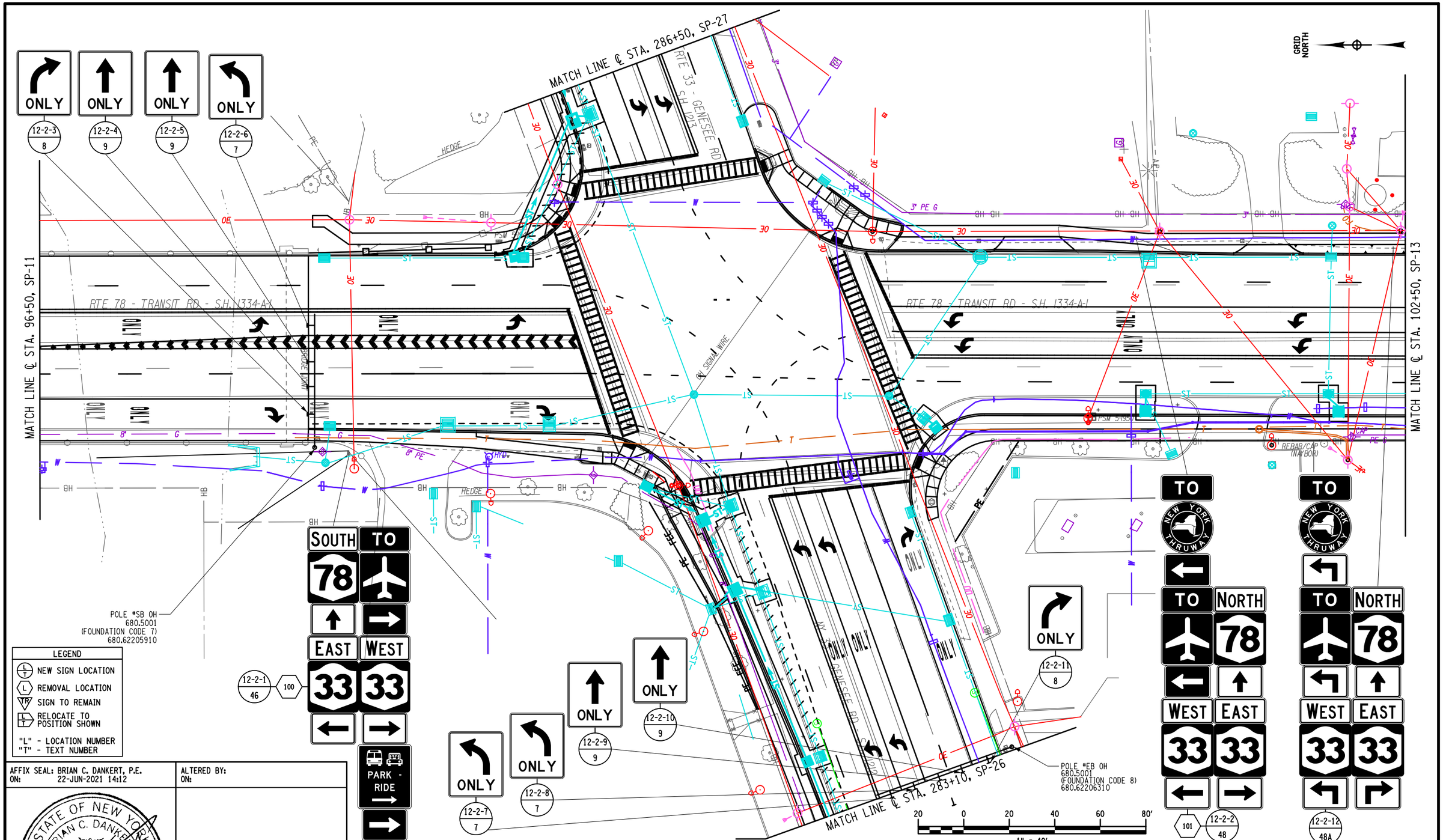

LEGEND

- NEW SIGN LOCATION
- REMOVAL LOCATION
- SIGN TO REMAIN
- RELOCATE TO POSITION SHOWN

"L" - LOCATION NUMBER
"T" - TEXT NUMBER

AFFIX SEAL: BRIAN C. DANKERT, P.E.
ON: 22-JUN-2021 14:12

ALTERED BY:
ON:

STATE OF NEW YORK · BRIAN C. DANKERT · No. 092443 · LICENSED PROFESSIONAL ENGINEER

AS-BUILT REVISIONS
DESCRIPTION OF ALTERATIONS:

NY 78, TRANSIT ROAD, S.H. 1334A-1
FRENCH ROAD TO WEHRLE DRIVE
TOWNS OF CHEEKTOWAGA & LANCASTER
VILLAGE OF DEPEW
COUNTY: ERIE REGION: 05

PIN 5813.61
NY 78
UTILITY QUALITY LEVEL D

BRIDGES

CULVERTS

ALL DIMENSIONS IN ft UNLESS OTHERWISE NOTED

SIGNING PLAN 12
STA. 96+50 TO STA. 102+50

CONTRACT NUMBER
D264571

DRAWING NO. SP-12-2
SHEET NO. 139

IT IS A VIOLATION OF LAW FOR ANY PERSON, UNLESS THEY ARE ACTING UNDER THE DIRECTION OF A LICENSED PROFESSIONAL ENGINEER, ARCHITECT, LANDSCAPE ARCHITECT, OR LAND SURVEYOR, TO ALTER AN ITEM IN ANY WAY. IF AN ITEM BEARING THE STAMP OF A LICENSED PROFESSIONAL IS ALTERED, THE ALTERING ENGINEER, ARCHITECT, LANDSCAPE ARCHITECT, OR LAND SURVEYOR SHALL STAMP THE DOCUMENT AND INCLUDE THE NOTATION "ALTERED BY" FOLLOWED BY THEIR SIGNATURE, THE DATE OF SUCH ALTERATION, AND A SPECIFIC DESCRIPTION OF THE ALTERATION.

NEW YORK STATE OF OPPORTUNITY. Department of Transportation

DESIGN SUPERVISOR S. S. VAIDYA
JOB MANAGER R. F. SCHALLER
DESIGN K.A. GORECKI
CHECK B.C. DANKERT
DRAFTING K.A. GORECKI
CHECK B.C. DANKERT
PROJECT MANAGER S. S. VAIDYA

FILE NAME = 581361_CPH_SP_12_2.dgn
DATE/TIME = 22-JUN-2021 14:12
USER = kgorecki

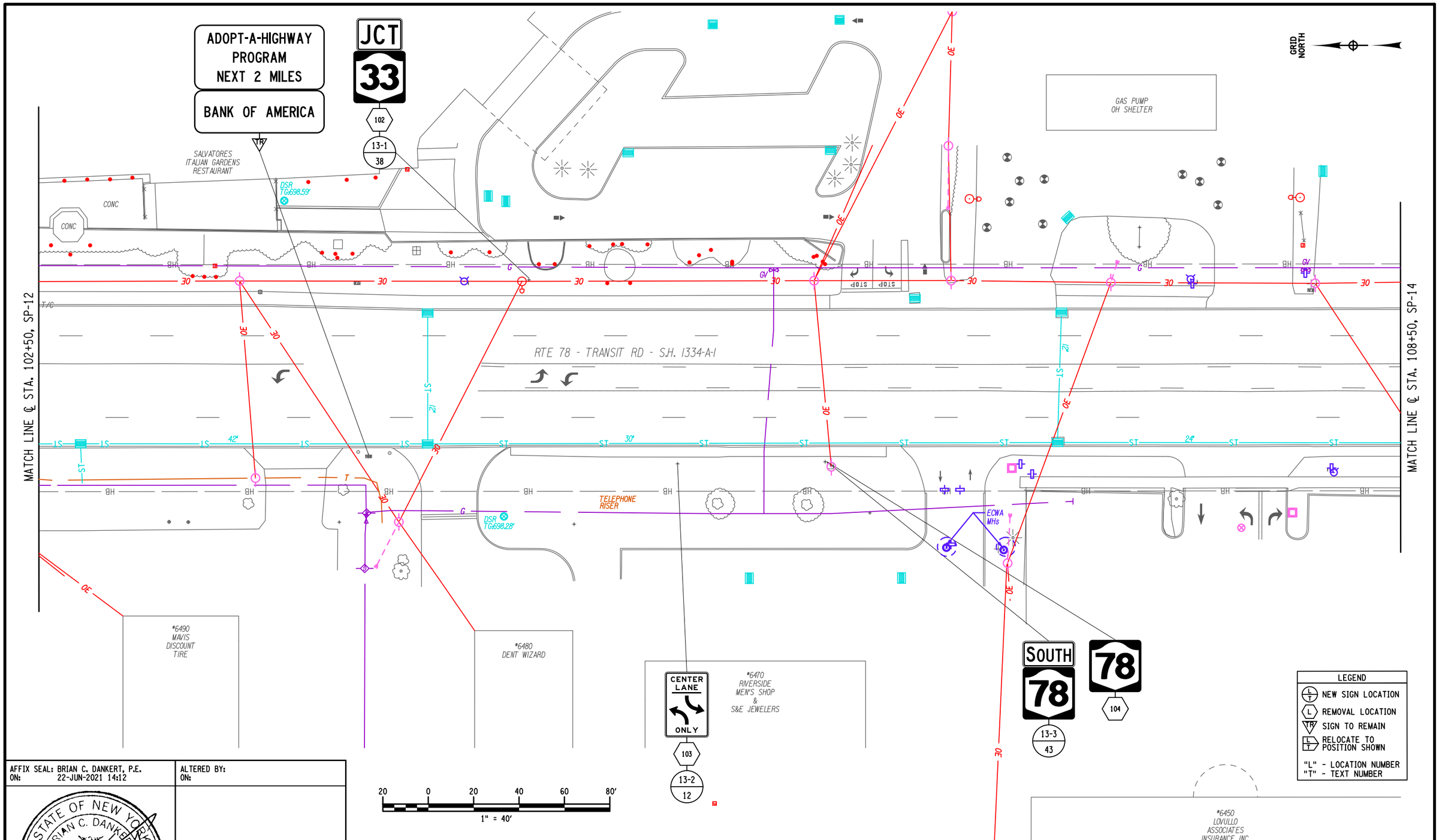

AFFIX SEAL: BRIAN C. DANKERT, P.E.
ON: 22-JUN-2021 14:12

ALTERED BY:
ON:

STATE OF NEW YORK · BRIAN C. DANKERT · No. 092413 · LICENSED PROFESSIONAL ENGINEER

AS-BUILT REVISIONS
DESCRIPTION OF ALTERATIONS:

NY 78, TRANSIT ROAD, S.H. 1334A-1
FRENCH ROAD TO WEHRLE DRIVE
TOWNS OF CHEEKTOWAGA & LANCASTER
VILLAGE OF DEPEW
COUNTY: ERIE REGION: 05

PIN 5813.61
NY 78
UTILITY QUALITY LEVEL D

BRIDGES

CULVERTS

ALL DIMENSIONS IN ft UNLESS OTHERWISE NOTED

SIGNING PLAN 13
STA. 102+50 TO STA. 108+50

CONTRACT NUMBER
D264571

DRAWING NO. SP-13
SHEET NO. 140

IT IS A VIOLATION OF LAW FOR ANY PERSON, UNLESS THEY ARE ACTING UNDER THE DIRECTION OF A LICENSED PROFESSIONAL ENGINEER, ARCHITECT, LANDSCAPE ARCHITECT, OR LAND SURVEYOR, TO ALTER AN ITEM IN ANY WAY. IF AN ITEM BEARING THE STAMP OF A LICENSED PROFESSIONAL IS ALTERED, THE ALTERING ENGINEER, ARCHITECT, LANDSCAPE ARCHITECT, OR LAND SURVEYOR SHALL STAMP THE DOCUMENT AND INCLUDE THE NOTATION "ALTERED BY" FOLLOWED BY THEIR SIGNATURE, THE DATE OF SUCH ALTERATION, AND A SPECIFIC DESCRIPTION OF THE ALTERATION.

NEW YORK STATE OF OPPORTUNITY. Department of Transportation

PROJECT MANAGER S. S. VAIDYA
CHECK B.C. DANKERT
DRAFTING K.A. GORECKI
DESIGN K.A. GORECKI
JOB MANAGER R. F. SCHALLER
DESIGN SUPERVISOR S. S. VAIDYA

FILE NAME = 581361_CPH_SP_13.dgn
DATE/TIME = 22-JUN-2021 14:12
USER = kgorecki

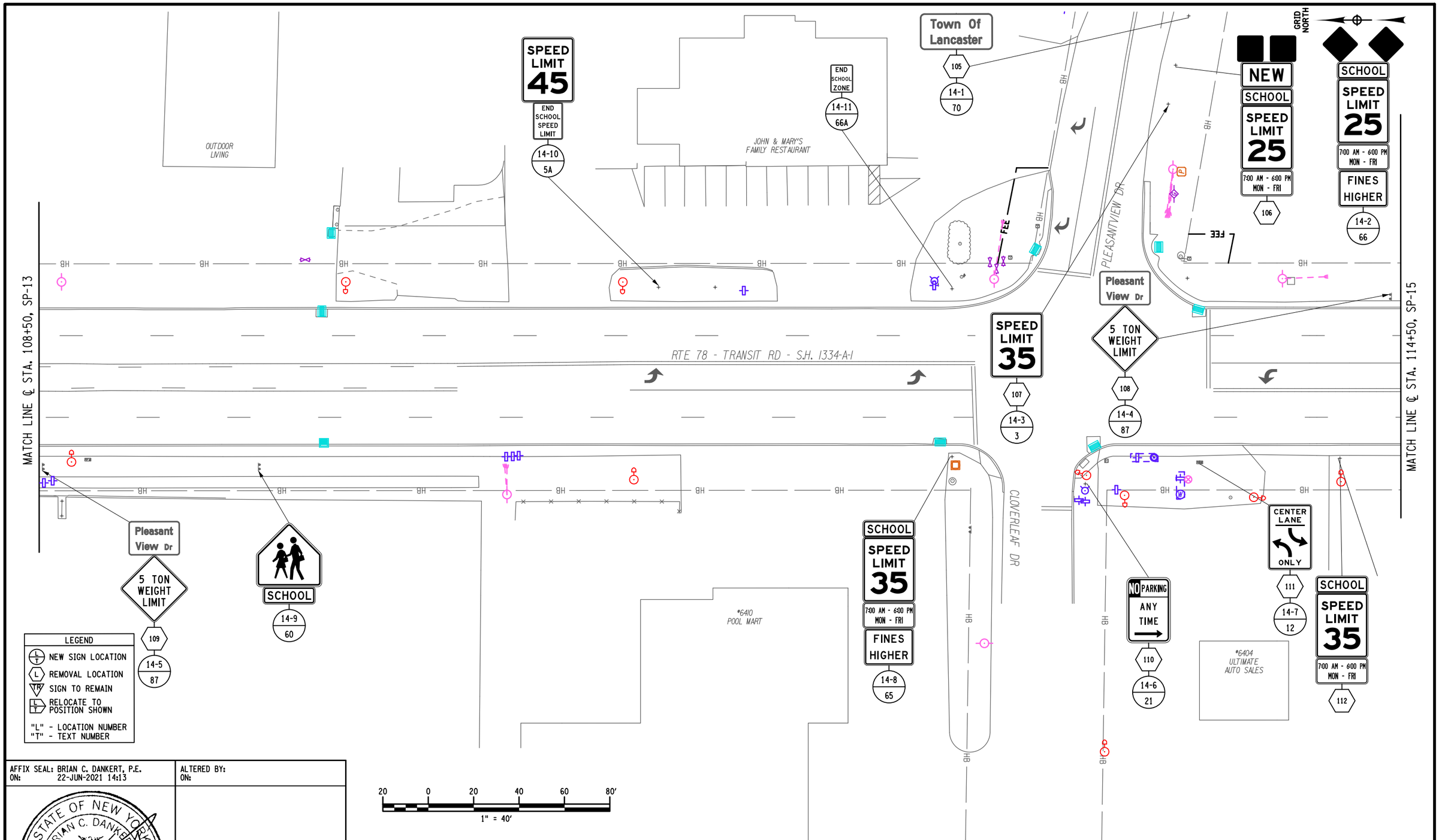

AFFIX SEAL: BRIAN C. DANKERT, P.E.
ON: 22-JUN-2021 14:13

ALTERED BY:
ON:

STATE OF NEW YORK · BRIAN C. DANKERT · No. 092443 · LICENSED PROFESSIONAL ENGINEER

AS-BUILT REVISIONS
DESCRIPTION OF ALTERATIONS:

NY 78, TRANSIT ROAD, S.H. 1334A-1
FRENCH ROAD TO WEHRLE DRIVE
TOWNS OF CHEEKTOWAGA & LANCASTER
VILLAGE OF DEPEW
COUNTY: ERIE REGION: 05

PIN 5813.61
NY 78
UTILITY QUALITY LEVEL D

BRIDGES

CULVERTS

ALL DIMENSIONS IN ft UNLESS OTHERWISE NOTED

SIGNING PLAN 14
STA. 108+50 TO STA. 114+50

CONTRACT NUMBER
D264571

DRAWING NO. SP-14
SHEET NO. 141

IT IS A VIOLATION OF LAW FOR ANY PERSON, UNLESS THEY ARE ACTING UNDER THE DIRECTION OF A LICENSED PROFESSIONAL ENGINEER, ARCHITECT, LANDSCAPE ARCHITECT, OR LAND SURVEYOR, TO ALTER AN ITEM IN ANY WAY. IF AN ITEM BEARING THE STAMP OF A LICENSED PROFESSIONAL IS ALTERED, THE ALTERING ENGINEER, ARCHITECT, LANDSCAPE ARCHITECT, OR LAND SURVEYOR SHALL STAMP THE DOCUMENT AND INCLUDE THE NOTATION "ALTERED BY" FOLLOWED BY THEIR SIGNATURE, THE DATE OF SUCH ALTERATION, AND A SPECIFIC DESCRIPTION OF THE ALTERATION.

NEW YORK STATE OF OPPORTUNITY. Department of Transportation

DESIGN SUPERVISOR S. S. VAIDYA
JOB MANAGER R. F. SCHALLER
DESIGN K.A. GORECKI
CHECK B.C. DANKERT
DRAFTING K.A. GORECKI
CHECK B.C. DANKERT
PROJECT MANAGER S. S. VAIDYA

FILE NAME = 581361_CPH_SP_14.dgn
DATE/TIME = 22-JUN-2021 14:13
USER = kgorecki

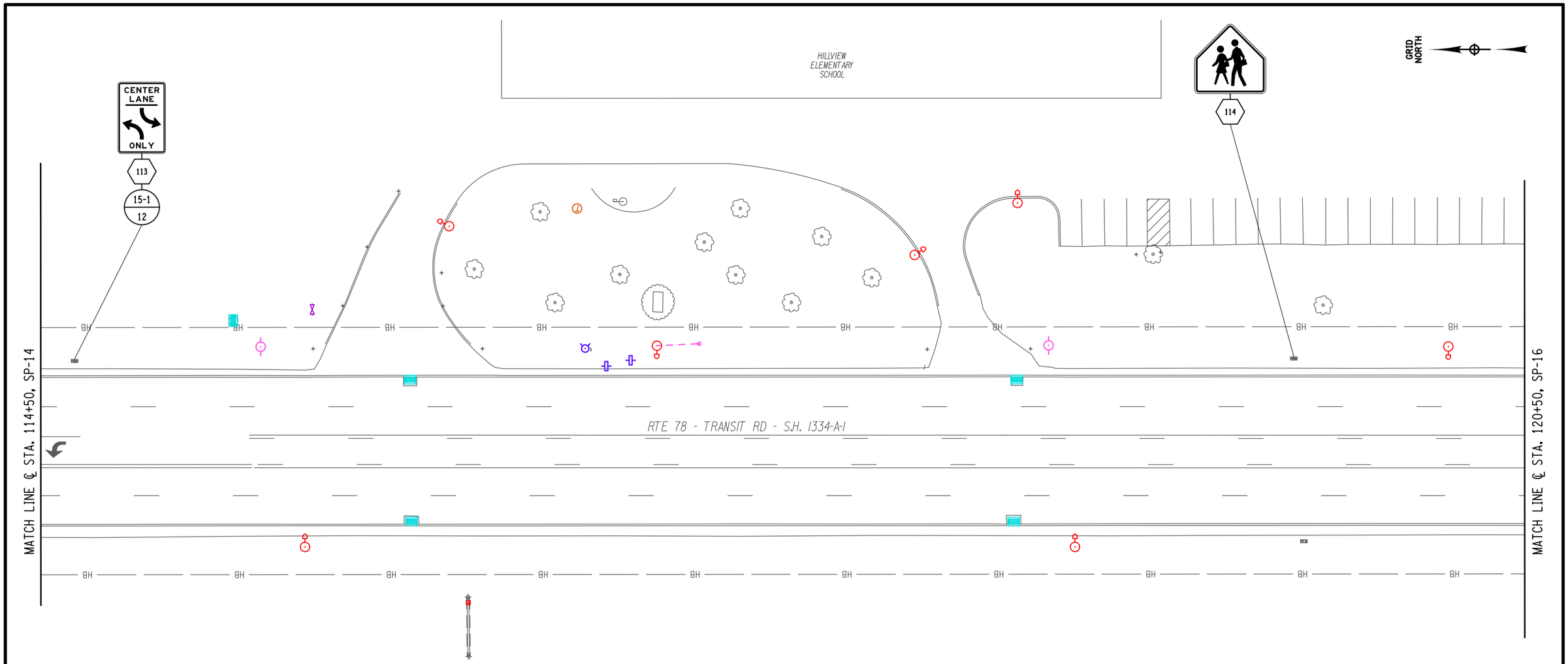

LEGEND	
(L/T)	NEW SIGN LOCATION
(L)	REMOVAL LOCATION
(TR)	SIGN TO REMAIN
(L/T)	RELOCATE TO POSITION SHOWN

"L" - LOCATION NUMBER
"T" - TEXT NUMBER

20 0 20 40 60 80′
1" = 40′

AFFIX SEAL: BRIAN C. DANKERT, P.E.
ON: 22-JUN-2021 14:13

ALTERED BY:
ON:

STATE OF NEW YORK
BRIAN C. DANKERT
No. 092443
LICENSED PROFESSIONAL ENGINEER

AS-BUILT REVISIONS
DESCRIPTION OF ALTERATIONS:

NY 78, TRANSIT ROAD, S.H. 1334A-1
FRENCH ROAD TO WEHRLE DRIVE
TOWNS OF CHEEKTOWAGA & LANCASTER
VILLAGE OF DEPEW
COUNTY: ERIE REGION: 05

PIN 5813.61
NY 78
UTILITY QUALITY LEVEL D

BRIDGES

CULVERTS

ALL DIMENSIONS IN ft UNLESS OTHERWISE NOTED

SIGNING PLAN 15
STA. 114+50 TO STA. 120+50

CONTRACT NUMBER
D264571

DRAWING NO. SP-15
SHEET NO. 142

IT IS A VIOLATION OF LAW FOR ANY PERSON, UNLESS THEY ARE ACTING UNDER THE DIRECTION OF A LICENSED PROFESSIONAL ENGINEER, ARCHITECT, LANDSCAPE ARCHITECT, OR LAND SURVEYOR, TO ALTER AN ITEM IN ANY WAY. IF AN ITEM BEARING THE STAMP OF A LICENSED PROFESSIONAL IS ALTERED, THE ALTERING ENGINEER, ARCHITECT, LANDSCAPE ARCHITECT, OR LAND SURVEYOR SHALL STAMP THE DOCUMENT AND INCLUDE THE NOTATION "ALTERED BY" FOLLOWED BY THEIR SIGNATURE, THE DATE OF SUCH ALTERATION, AND A SPECIFIC DESCRIPTION OF THE ALTERATION.

NEW YORK STATE OF OPPORTUNITY. Department of Transportation

PROJECT MANAGER S. S. VAIDYA
CHECK B.C. DANKERT
DRAFTING K.A. GORECKI
CHECK B.C. DANKERT
DESIGN K.A. GORECKI
JOB MANAGER R. F. SCHALLER
DESIGN SUPERVISOR S. S. VAIDYA

FILE NAME = 581361_CPH_SP_15.dgn
DATE/TIME = 22-JUN-2021 14:13
USER = kgorecki

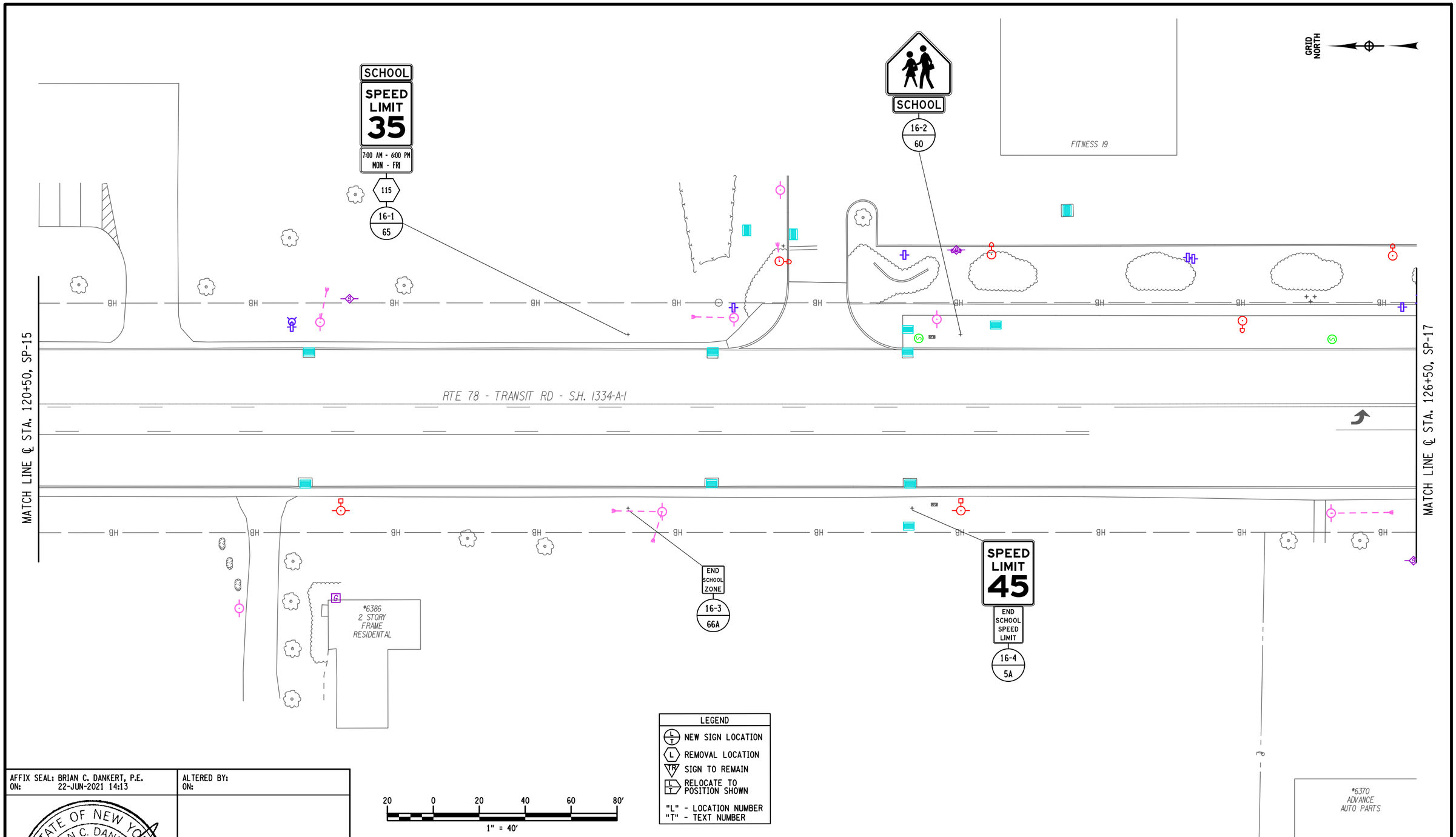

AFFIX SEAL: BRIAN C. DANKERT, P.E.
ON: 22-JUN-2021 14:13

ALTERED BY:
ON:

STATE OF NEW YORK · BRIAN C. DANKERT · No. 092443 · LICENSED PROFESSIONAL ENGINEER

AS-BUILT REVISIONS
DESCRIPTION OF ALTERATIONS:

NY 78, TRANSIT ROAD, S.H. 1334A-1
FRENCH ROAD TO WEHRLE DRIVE
TOWNS OF CHEEKTOWAGA & LANCASTER
VILLAGE OF DEPEW
COUNTY: ERIE REGION: 05

PIN 5813.61
NY 78
UTILITY QUALITY LEVEL D

BRIDGES

CULVERTS

ALL DIMENSIONS IN ft UNLESS OTHERWISE NOTED

SIGNING PLAN 16
STA. 120+50 TO STA. 126+50

CONTRACT NUMBER
D264571

DRAWING NO. SP-16
SHEET NO. 143

IT IS A VIOLATION OF LAW FOR ANY PERSON, UNLESS THEY ARE ACTING UNDER THE DIRECTION OF A LICENSED PROFESSIONAL ENGINEER, ARCHITECT, LANDSCAPE ARCHITECT, OR LAND SURVEYOR, TO ALTER AN ITEM IN ANY WAY. IF AN ITEM BEARING THE STAMP OF A LICENSED PROFESSIONAL IS ALTERED, THE ALTERING ENGINEER, ARCHITECT, LANDSCAPE ARCHITECT, OR LAND SURVEYOR SHALL STAMP THE DOCUMENT AND INCLUDE THE NOTATION "ALTERED BY" FOLLOWED BY THEIR SIGNATURE, THE DATE OF SUCH ALTERATION, AND A SPECIFIC DESCRIPTION OF THE ALTERATION.

NEW YORK STATE OF OPPORTUNITY. Department of Transportation

PROJECT MANAGER S. S. VAIDYA
CHECK B.C. DANKERT
DRAFTING K.A. GORECKI
CHECK B.C. DANKERT
DESIGN K.A. GORECKI
JOB MANAGER R. F. SCHALLER
DESIGN SUPERVISOR S. S. VAIDYA

FILE NAME = 581361_CPH_SP_16.dgn
DATE/TIME = 22-JUN-2021 14:13
USER = kgorecki

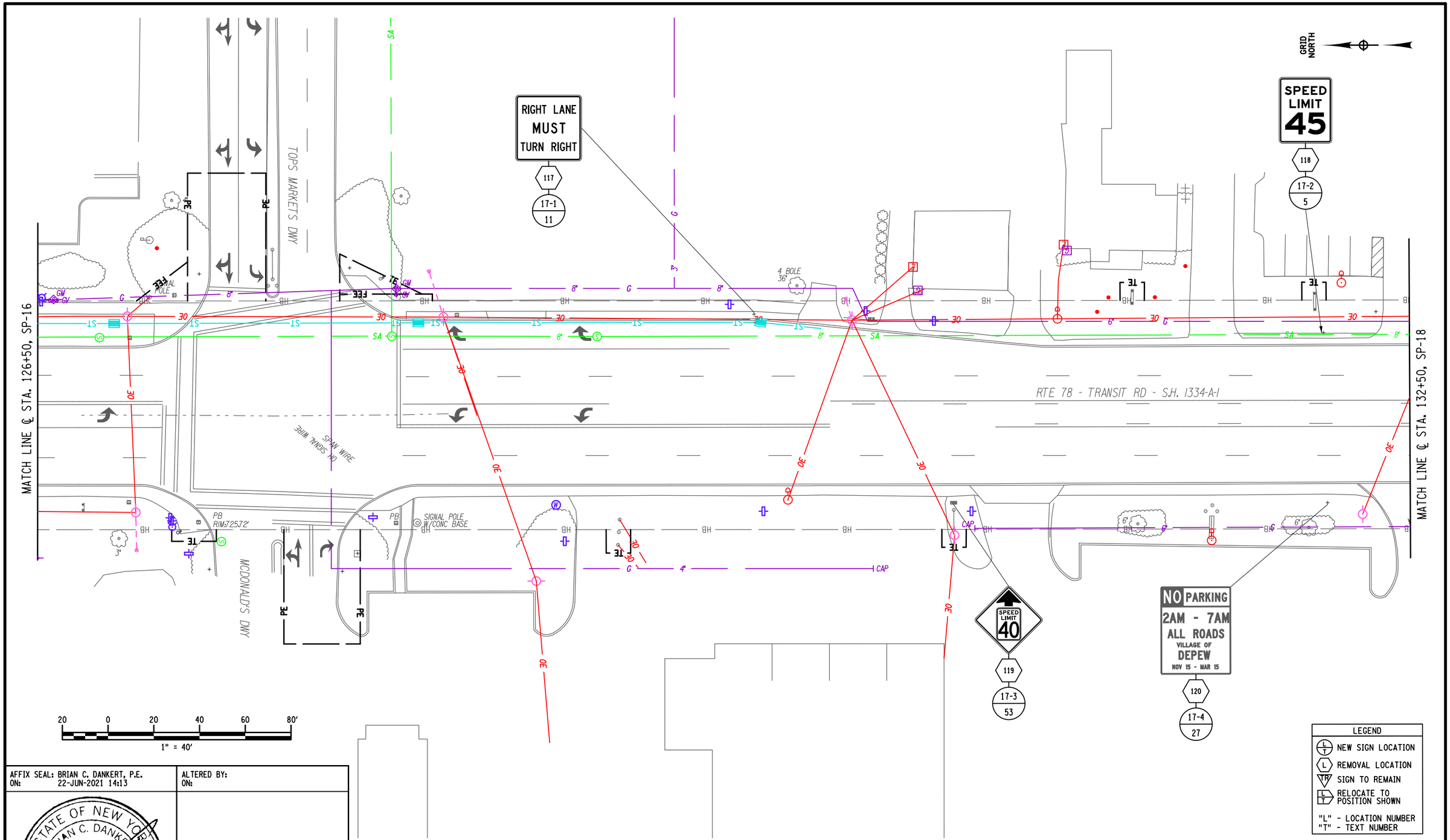

LEGEND

- NEW SIGN LOCATION
- REMOVAL LOCATION
- SIGN TO REMAIN
- RELOCATE TO POSITION SHOWN

"L" - LOCATION NUMBER
"T" - TEXT NUMBER

AFFIX SEAL: BRIAN C. DANKERT, P.E.
ON: 22-JUN-2021 14:13

ALTERED BY:
ON:

STATE OF NEW YORK · BRIAN C. DANKERT · No. 092443 · LICENSED PROFESSIONAL ENGINEER

AS-BUILT REVISIONS
DESCRIPTION OF ALTERATIONS:

NY 78, TRANSIT ROAD, S.H. 1334A-1
FRENCH ROAD TO WEHRLE DRIVE
TOWNS OF CHEEKTOWAGA & LANCASTER
VILLAGE OF DEPEW
COUNTY: ERIE REGION: 05

PIN 5813.61
NY 78
UTILITY QUALITY LEVEL D

BRIDGES

CULVERTS

ALL DIMENSIONS IN ft UNLESS OTHERWISE NOTED

SIGNING PLAN 17
STA. 126+50 TO STA. 132+50

CONTRACT NUMBER
D264571

DRAWING NO. SP-17
SHEET NO. 144

IT IS A VIOLATION OF LAW FOR ANY PERSON, UNLESS THEY ARE ACTING UNDER THE DIRECTION OF A LICENSED PROFESSIONAL ENGINEER, ARCHITECT, LANDSCAPE ARCHITECT, OR LAND SURVEYOR, TO ALTER AN ITEM IN ANY WAY. IF AN ITEM BEARING THE STAMP OF A LICENSED PROFESSIONAL IS ALTERED, THE ALTERING ENGINEER, ARCHITECT, LANDSCAPE ARCHITECT, OR LAND SURVEYOR SHALL STAMP THE DOCUMENT AND INCLUDE THE NOTATION "ALTERED BY" FOLLOWED BY THEIR SIGNATURE, THE DATE OF SUCH ALTERATION, AND A SPECIFIC DESCRIPTION OF THE ALTERATION.

NEW YORK STATE OF OPPORTUNITY. Department of Transportation

DESIGN SUPERVISOR S. S. VAIDYA
JOB MANAGER R. F. SCHALLER
DESIGN K.A. GORECKI
CHECK B.C. DANKERT
DRAFTING K.A. GORECKI
CHECK B.C. DANKERT
PROJECT MANAGER S. S. VAIDYA

FILE NAME = 581361_CPH_SP_17.dgn
DATE/TIME = 22-JUN-2021 14:13
USER = kgorecki

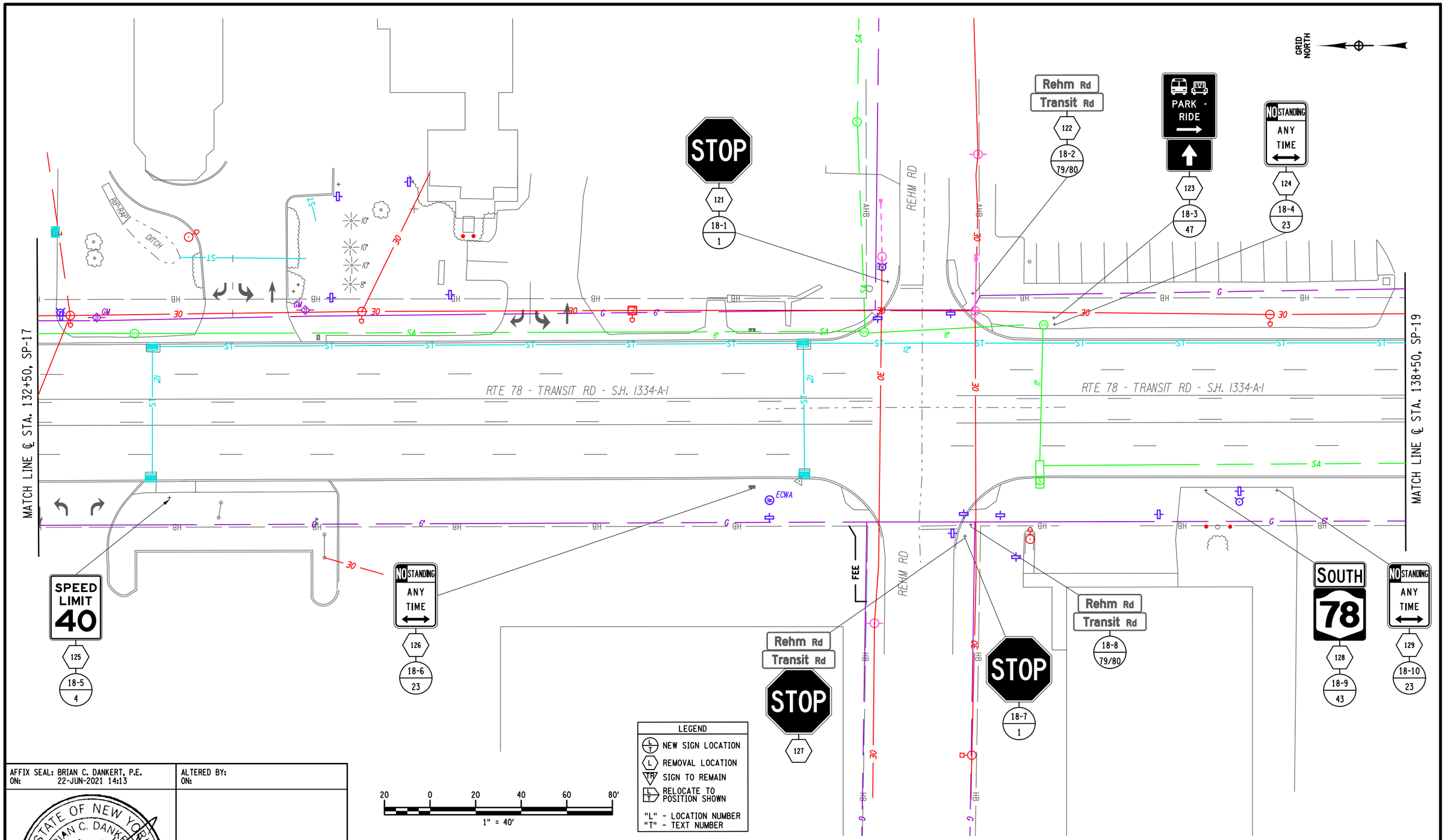

AFFIX SEAL: BRIAN C. DANKERT, P.E.
ON: 22-JUN-2021 14:13

ALTERED BY:
ON:

STATE OF NEW YORK
BRIAN C. DANKERT
LICENSED PROFESSIONAL ENGINEER
No. 092443

AS-BUILT REVISIONS
DESCRIPTION OF ALTERATIONS:

NY 78, TRANSIT ROAD, S.H. 1334A-1
FRENCH ROAD TO WEHRLE DRIVE
TOWNS OF CHEEKTOWAGA & LANCASTER
VILLAGE OF DEPEW
COUNTY: ERIE REGION: 05

PIN 5813.61
NY 78
UTILITY QUALITY LEVEL D

BRIDGES

CULVERTS

ALL DIMENSIONS IN ft UNLESS OTHERWISE NOTED

SIGNING PLAN 18
STA. 132+50 TO STA. 138+50

CONTRACT NUMBER
D264571

DRAWING NO. SP-18
SHEET NO. 145

IT IS A VIOLATION OF LAW FOR ANY PERSON, UNLESS THEY ARE ACTING UNDER THE DIRECTION OF A LICENSED PROFESSIONAL ENGINEER, ARCHITECT, LANDSCAPE ARCHITECT, OR LAND SURVEYOR, TO ALTER AN ITEM IN ANY WAY. IF AN ITEM BEARING THE STAMP OF A LICENSED PROFESSIONAL IS ALTERED, THE ALTERING ENGINEER, ARCHITECT, LANDSCAPE ARCHITECT, OR LAND SURVEYOR SHALL STAMP THE DOCUMENT AND INCLUDE THE NOTATION "ALTERED BY" FOLLOWED BY THEIR SIGNATURE, THE DATE OF SUCH ALTERATION, AND A SPECIFIC DESCRIPTION OF THE ALTERATION.

NEW YORK STATE OF OPPORTUNITY. Department of Transportation

PROJECT MANAGER S. S. VAIDYA
CHECK B.C. DANKERT
DRAFTING K.A. GORECKI
CHECK B.C. DANKERT
DESIGN K.A. GORECKI
JOB MANAGER R. F. SCHALLER
DESIGN SUPERVISOR S. S. VAIDYA

FILE NAME = 581361_CPH_SP_18.dgn
DATE/TIME = 22-JUN-2021 14:13
USER = kgorecki

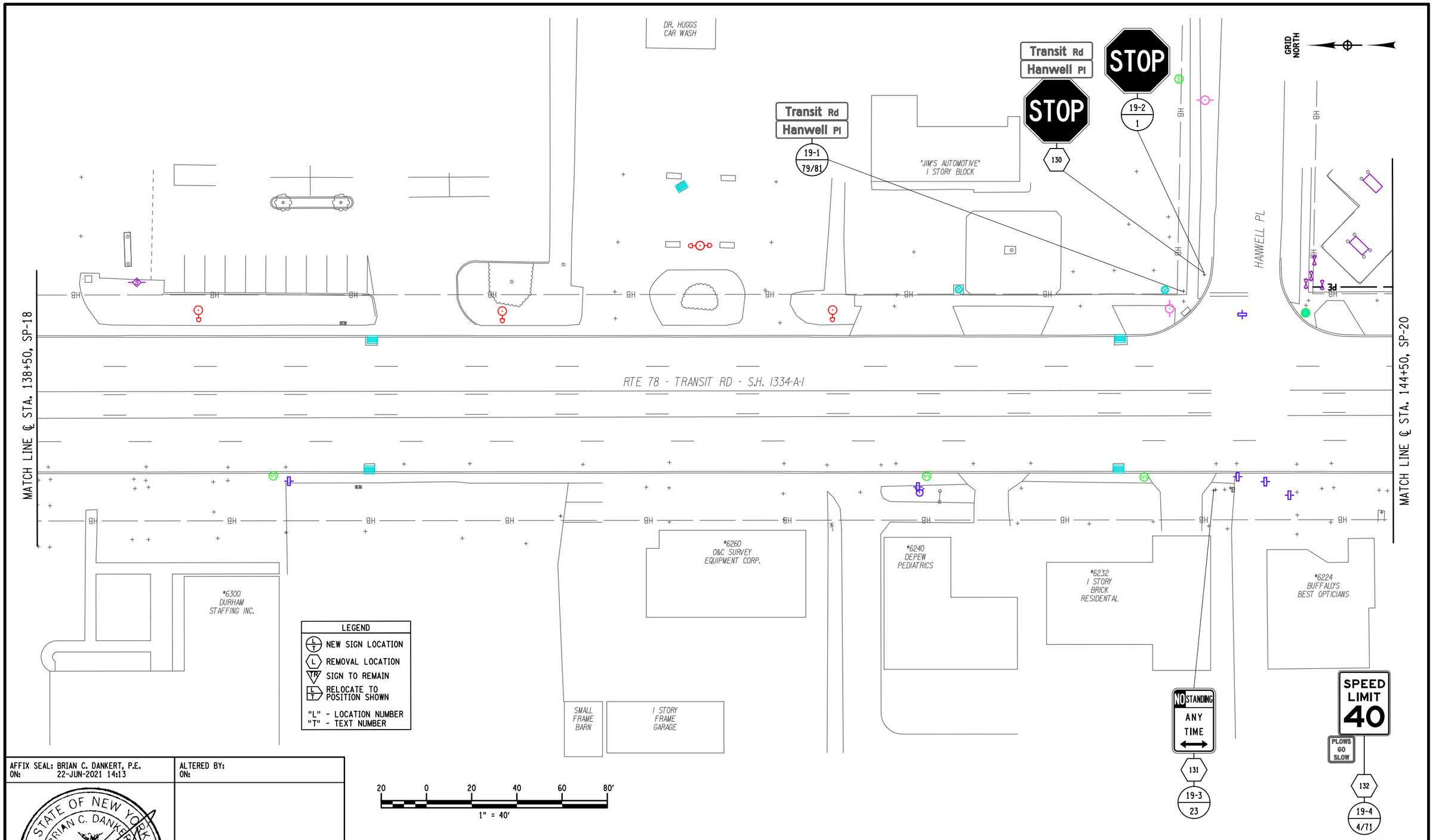

AFFIX SEAL: BRIAN C. DANKERT, P.E.
ON: 22-JUN-2021 14:13

ALTERED BY:
ON:

STATE OF NEW YORK · BRIAN C. DANKERT · No. 092443 · LICENSED PROFESSIONAL ENGINEER

AS-BUILT REVISIONS
DESCRIPTION OF ALTERATIONS:

NY 78, TRANSIT ROAD, S.H. 1334A-1
FRENCH ROAD TO WEHRLE DRIVE
TOWNS OF CHEEKTOWAGA & LANCASTER
VILLAGE OF DEPEW
COUNTY: ERIE REGION: 05

PIN 5813.61
NY 78
UTILITY QUALITY LEVEL D

BRIDGES

CULVERTS

ALL DIMENSIONS IN ft UNLESS OTHERWISE NOTED

SIGNING PLAN 19
STA. 135+50 TO STA. 144+50

CONTRACT NUMBER
D264571

DRAWING NO. SP-19
SHEET NO. 146

IT IS A VIOLATION OF LAW FOR ANY PERSON, UNLESS THEY ARE ACTING UNDER THE DIRECTION OF A LICENSED PROFESSIONAL ENGINEER, ARCHITECT, LANDSCAPE ARCHITECT, OR LAND SURVEYOR, TO ALTER AN ITEM IN ANY WAY. IF AN ITEM BEARING THE STAMP OF A LICENSED PROFESSIONAL IS ALTERED, THE ALTERING ENGINEER, ARCHITECT, LANDSCAPE ARCHITECT, OR LAND SURVEYOR SHALL STAMP THE DOCUMENT AND INCLUDE THE NOTATION "ALTERED BY" FOLLOWED BY THEIR SIGNATURE, THE DATE OF SUCH ALTERATION, AND A SPECIFIC DESCRIPTION OF THE ALTERATION.

NEW YORK STATE OF OPPORTUNITY. Department of Transportation

DESIGN SUPERVISOR S. S. VAIDYA
JOB MANAGER R. F. SCHALLER
DESIGN K.A. GORECKI
CHECK B.C. DANKERT
DRAFTING K.A. GORECKI
CHECK B.C. DANKERT
PROJECT MANAGER S. S. VAIDYA

FILE NAME = 581361_CPH_SP_19.dgn
DATE/TIME = 22-JUN-2021 14:13
USER = kgorecki

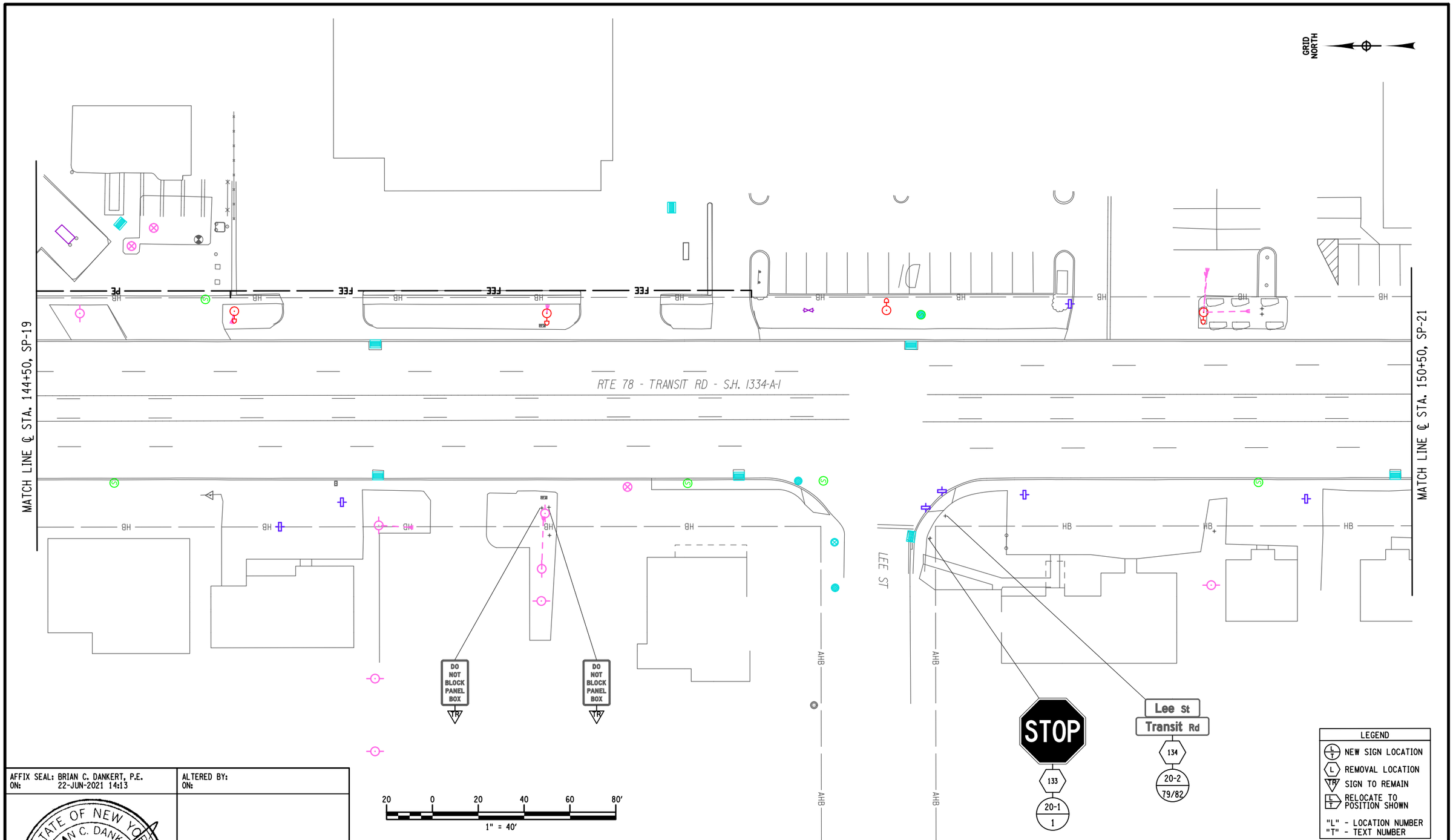

LEGEND

- (L/T) NEW SIGN LOCATION
- (L) REMOVAL LOCATION
- (TR) SIGN TO REMAIN
- (L/T) RELOCATE TO POSITION SHOWN

"L" - LOCATION NUMBER
"T" - TEXT NUMBER

AFFIX SEAL: BRIAN C. DANKERT, P.E.
ON: 22-JUN-2021 14:13

STATE OF NEW YORK · BRIAN C. DANKERT · No. 092443 · LICENSED PROFESSIONAL ENGINEER

ALTERED BY:
ON:

AS-BUILT REVISIONS
DESCRIPTION OF ALTERATIONS:

NY 78, TRANSIT ROAD, S.H. 1334A-1
FRENCH ROAD TO WEHRLE DRIVE
TOWNS OF CHEEKTOWAGA & LANCASTER
VILLAGE OF DEPEW
COUNTY: ERIE REGION: 05

PIN 5813.61
NY 78
UTILITY QUALITY LEVEL D

BRIDGES

CULVERTS

ALL DIMENSIONS IN ft UNLESS OTHERWISE NOTED

SIGNING PLAN 20
STA. 144+50 TO STA. 150+50

CONTRACT NUMBER
D264571

DRAWING NO. SP-20
SHEET NO. 147

IT IS A VIOLATION OF LAW FOR ANY PERSON, UNLESS THEY ARE ACTING UNDER THE DIRECTION OF A LICENSED PROFESSIONAL ENGINEER, ARCHITECT, LANDSCAPE ARCHITECT, OR LAND SURVEYOR, TO ALTER AN ITEM IN ANY WAY. IF AN ITEM BEARING THE STAMP OF A LICENSED PROFESSIONAL IS ALTERED, THE ALTERING ENGINEER, ARCHITECT, LANDSCAPE ARCHITECT, OR LAND SURVEYOR SHALL STAMP THE DOCUMENT AND INCLUDE THE NOTATION "ALTERED BY" FOLLOWED BY THEIR SIGNATURE, THE DATE OF SUCH ALTERATION, AND A SPECIFIC DESCRIPTION OF THE ALTERATION.

NEW YORK STATE OF OPPORTUNITY. Department of Transportation

PROJECT MANAGER S. S. VAIDYA
CHECK B.C. DANKERT
DRAFTING K.A. GORECKI
CHECK B.C. DANKERT
DESIGN K.A. GORECKI
JOB MANAGER R. F. SCHALLER
DESIGN SUPERVISOR S. S. VAIDYA

FILE NAME = 581361_CPH_SP_20.dgn
DATE/TIME = 22-JUN-2021 14:13
USER = kgorecki

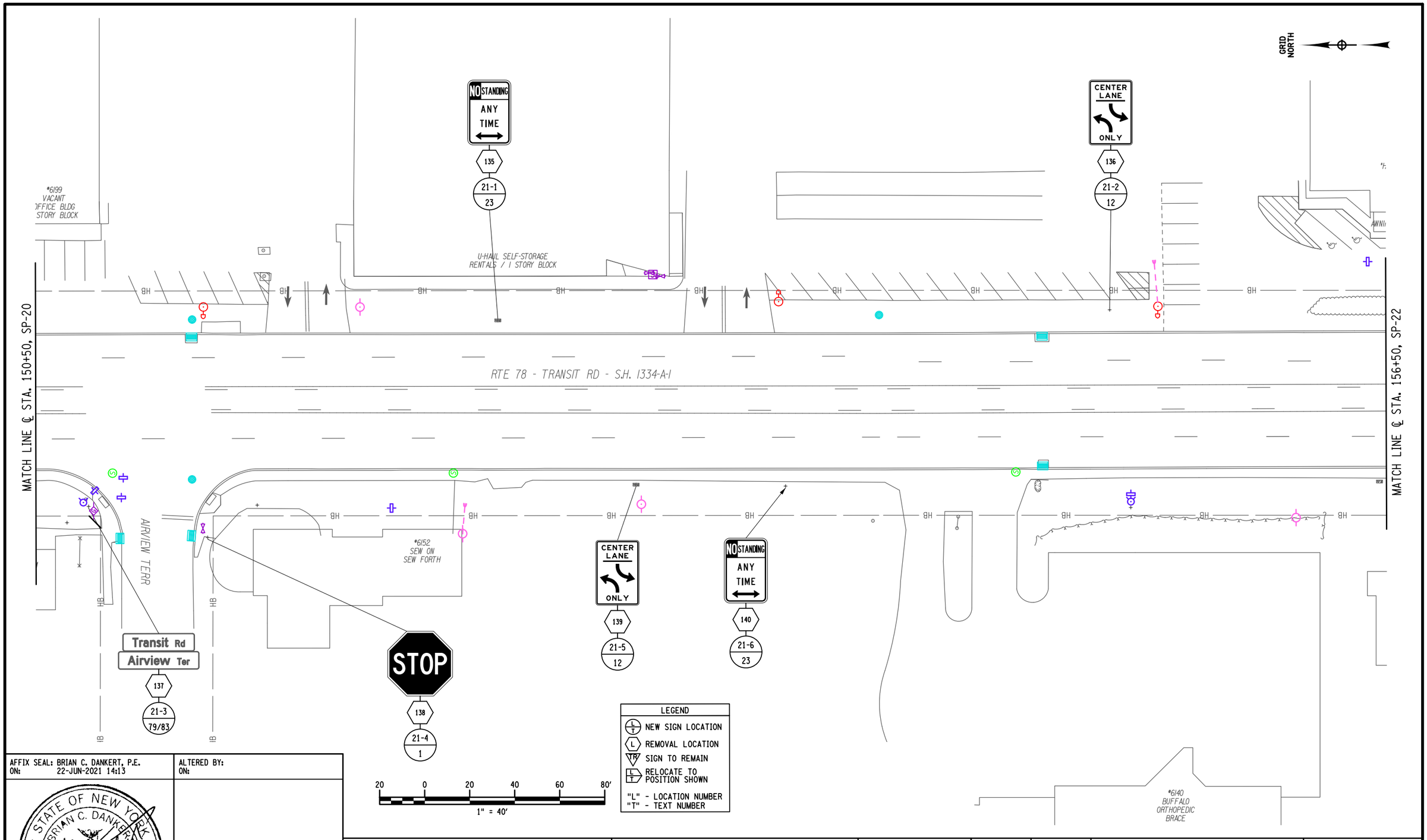

AFFIX SEAL: BRIAN C. DANKERT, P.E.
ON: 22-JUN-2021 14:13

STATE OF NEW YORK · BRIAN C. DANKERT · No. 092443 · LICENSED PROFESSIONAL ENGINEER

ALTERED BY:
ON:

AS-BUILT REVISIONS
DESCRIPTION OF ALTERATIONS:

NY 78, TRANSIT ROAD, S.H. 1334A-1
FRENCH ROAD TO WEHRLE DRIVE
TOWNS OF CHEEKTOWAGA & LANCASTER
VILLAGE OF DEPEW
COUNTY: ERIE REGION: 05

PIN 5813.61
NY 78
UTILITY QUALITY LEVEL D

BRIDGES

CULVERTS

ALL DIMENSIONS IN ft UNLESS OTHERWISE NOTED

SIGNING PLAN 21
STA. 150+50 TO STA. 156+50

CONTRACT NUMBER
D264571

DRAWING NO. SP-21
SHEET NO. 148

IT IS A VIOLATION OF LAW FOR ANY PERSON, UNLESS THEY ARE ACTING UNDER THE DIRECTION OF A LICENSED PROFESSIONAL ENGINEER, ARCHITECT, LANDSCAPE ARCHITECT, OR LAND SURVEYOR, TO ALTER AN ITEM IN ANY WAY. IF AN ITEM BEARING THE STAMP OF A LICENSED PROFESSIONAL IS ALTERED, THE ALTERING ENGINEER, ARCHITECT, LANDSCAPE ARCHITECT, OR LAND SURVEYOR SHALL STAMP THE DOCUMENT AND INCLUDE THE NOTATION "ALTERED BY" FOLLOWED BY THEIR SIGNATURE, THE DATE OF SUCH ALTERATION, AND A SPECIFIC DESCRIPTION OF THE ALTERATION.

NEW YORK STATE OF OPPORTUNITY. Department of Transportation

PROJECT MANAGER S. S. VAIDYA
CHECK B.C. DANKERT
DRAFTING K.A. GORECKI
CHECK B.C. DANKERT
DESIGN K.A. GORECKI
JOB MANAGER R. F. SCHALLER
DESIGN SUPERVISOR S. S. VAIDYA

FILE NAME = 581361_CPH_SP_21.dgn
DATE/TIME = 22-JUN-2021 14:13
USER = kgorecki

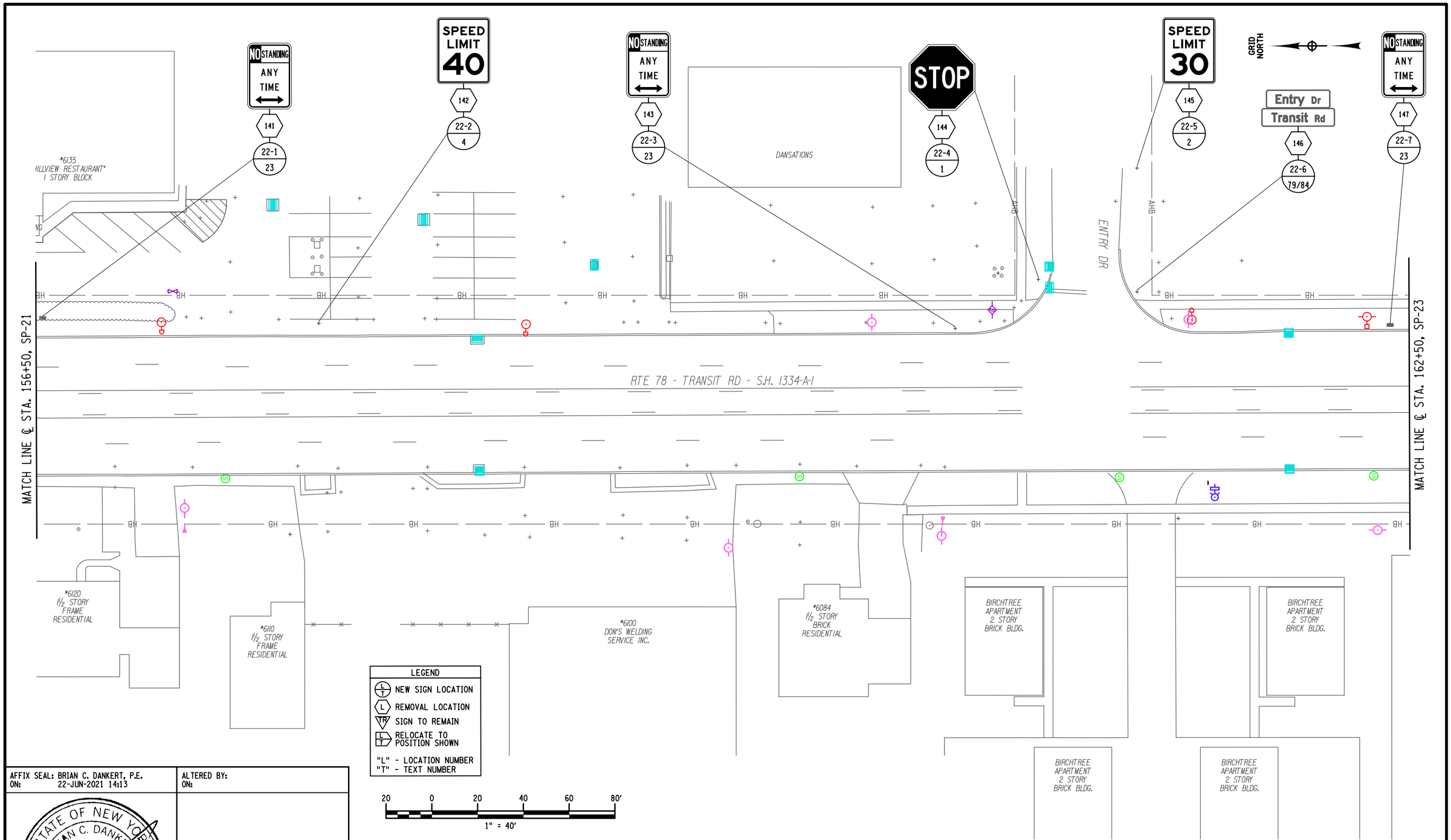

PROJECT MANAGER S. S. VAIDYA
CHECK B.C. DANKERT
DRAFTING K.A. GORECKI
CHECK B.C. DANKERT
DESIGN K.A. GORECKI
JOB MANAGER R. F. SCHALLER
DESIGN SUPERVISOR S. S. VAIDYA

FILE NAME = 581361_CPH_SP_22.dgn
DATE/TIME = 22-JUN-2021 14:13
USER = kgorecki

AFFIX SEAL: BRIAN C. DANKERT, P.E.
ON: 22-JUN-2021 14:13

STATE OF NEW YORK
BRIAN C. DANKERT
No. 092443
LICENSED PROFESSIONAL ENGINEER

ALTERED BY:
ON:

AS-BUILT REVISIONS
DESCRIPTION OF ALTERATIONS:

NY 78, TRANSIT ROAD, S.H. 1334A-1	PIN 5813.61	BRIDGES	CULVERTS	ALL DIMENSIONS IN ft UNLESS OTHERWISE NOTED
FRENCH ROAD TO WEHRLE DRIVE	NY 78			SIGNING PLAN 22
TOWNS OF CHEEKTOWAGA & LANCASTER	UTILITY QUALITY LEVEL D			STA. 156+50 TO STA. 162+50
VILLAGE OF DEPEW				
COUNTY: ERIE REGION: 05				

CONTRACT NUMBER
D264571

DRAWING NO. SP-22
SHEET NO. 149

IT IS A VIOLATION OF LAW FOR ANY PERSON, UNLESS THEY ARE ACTING UNDER THE DIRECTION OF A LICENSED PROFESSIONAL ENGINEER, ARCHITECT, LANDSCAPE ARCHITECT, OR LAND SURVEYOR, TO ALTER AN ITEM IN ANY WAY. IF AN ITEM BEARING THE STAMP OF A LICENSED PROFESSIONAL IS ALTERED, THE ALTERING ENGINEER, ARCHITECT, LANDSCAPE ARCHITECT, OR LAND SURVEYOR SHALL STAMP THE DOCUMENT AND INCLUDE THE NOTATION "ALTERED BY" FOLLOWED BY THEIR SIGNATURE, THE DATE OF SUCH ALTERATION, AND A SPECIFIC DESCRIPTION OF THE ALTERATION.

NEW YORK STATE OF OPPORTUNITY. Department of Transportation

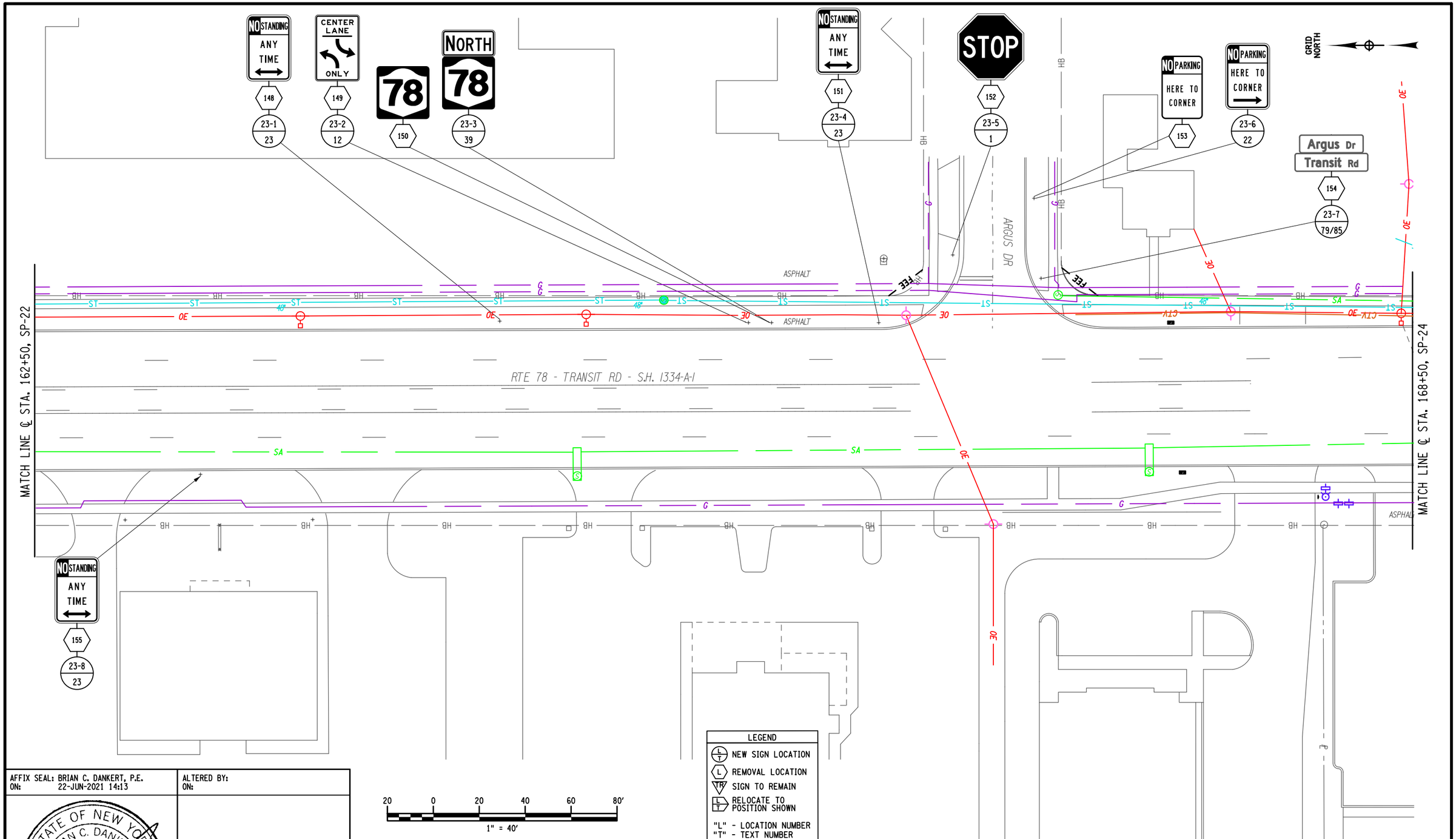

AFFIX SEAL: BRIAN C. DANKERT, P.E.
ON: 22-JUN-2021 14:13

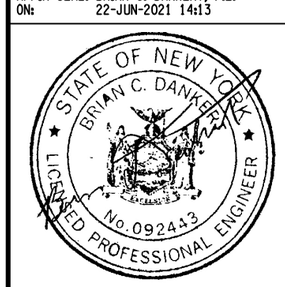

ALTERED BY:
ON:

AS-BUILT REVISIONS
DESCRIPTION OF ALTERATIONS:

NY 78, TRANSIT ROAD, S.H. 1334A-1
FRENCH ROAD TO WEHRLE DRIVE
TOWNS OF CHEEKTOWAGA & LANCASTER
VILLAGE OF DEPEW
COUNTY: ERIE REGION: 05

PIN 5813.61
NY 78
UTILITY QUALITY LEVEL D

BRIDGES

CULVERTS

ALL DIMENSIONS IN ft UNLESS OTHERWISE NOTED

SIGNING PLAN 23
STA. 162+50 TO STA. 168+50

CONTRACT NUMBER
D264571

DRAWING NO. SP-23
SHEET NO. 150

IT IS A VIOLATION OF LAW FOR ANY PERSON, UNLESS THEY ARE ACTING UNDER THE DIRECTION OF A LICENSED PROFESSIONAL ENGINEER, ARCHITECT, LANDSCAPE ARCHITECT, OR LAND SURVEYOR, TO ALTER AN ITEM IN ANY WAY. IF AN ITEM BEARING THE STAMP OF A LICENSED PROFESSIONAL IS ALTERED, THE ALTERING ENGINEER, ARCHITECT, LANDSCAPE ARCHITECT, OR LAND SURVEYOR SHALL STAMP THE DOCUMENT AND INCLUDE THE NOTATION "ALTERED BY" FOLLOWED BY THEIR SIGNATURE, THE DATE OF SUCH ALTERATION, AND A SPECIFIC DESCRIPTION OF THE ALTERATION.

NEW YORK STATE OF OPPORTUNITY. Department of Transportation

PROJECT MANAGER S. S. VAIDYA
CHECK B.C. DANKERT
DRAFTING K.A. GORECKI
CHECK B.C. DANKERT
DESIGN K.A. GORECKI
JOB MANAGER R. F. SCHALLER
DESIGN SUPERVISOR S. S. VAIDYA

FILE NAME = 581361_CPH_SP_23.dgn
DATE/TIME = 22-JUN-2021 14:13
USER = kgorecki

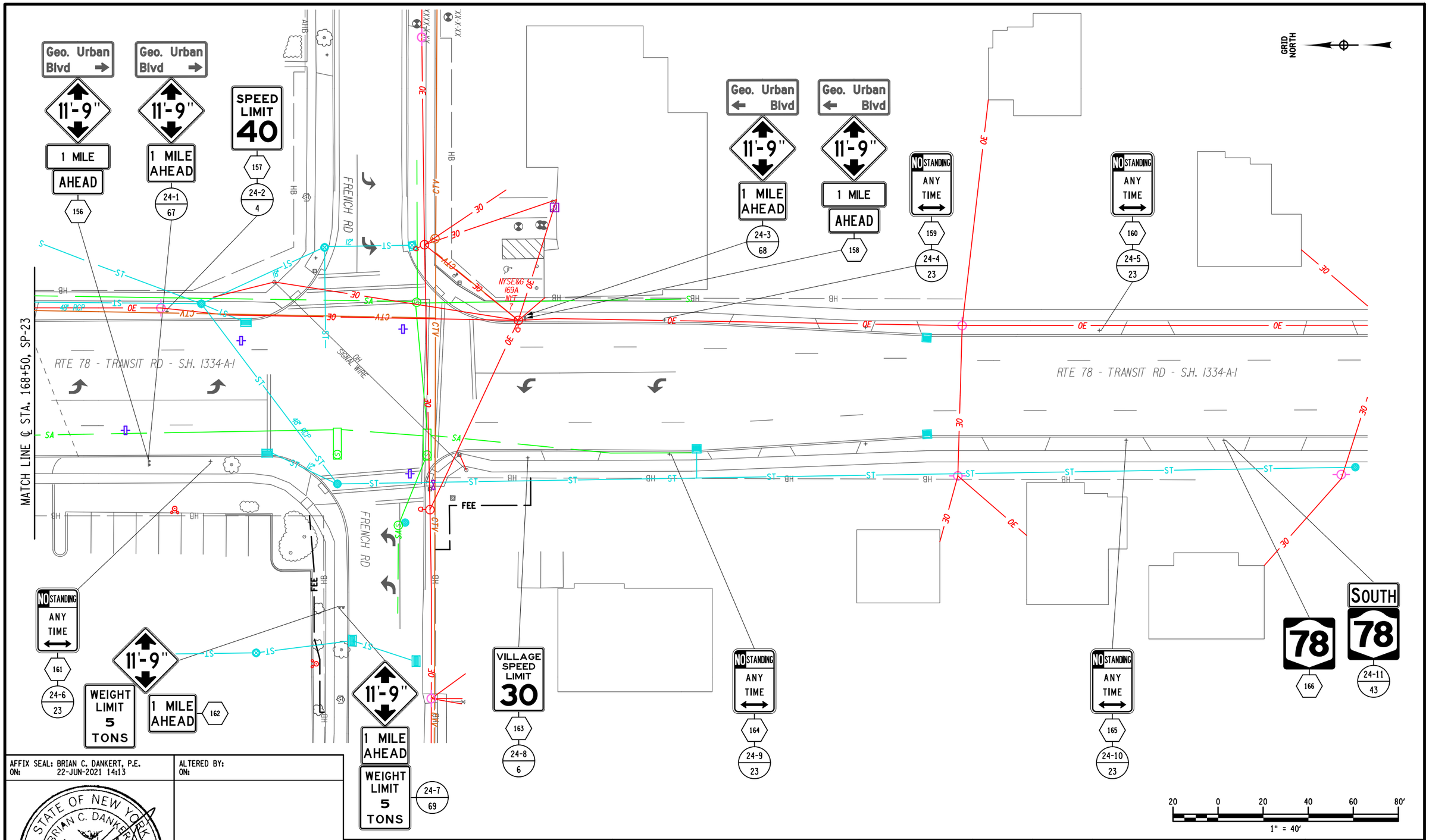

AFFIX SEAL: BRIAN C. DANKERT, P.E.
ON: 22-JUN-2021 14:13

ALTERED BY:
ON:

STATE OF NEW YORK
BRIAN C. DANKERT
No. 092443
LICENSED PROFESSIONAL ENGINEER

AS-BUILT REVISIONS
DESCRIPTION OF ALTERATIONS:

NY 78, TRANSIT ROAD, S.H. 1334A-1
FRENCH ROAD TO WEHRLE DRIVE
TOWNS OF CHEEKTOWAGA & LANCASTER
VILLAGE OF DEPEW
COUNTY: ERIE REGION: 05

PIN 5813.61
NY 78
UTILITY QUALITY LEVEL D

BRIDGES

CULVERTS

ALL DIMENSIONS IN ft UNLESS OTHERWISE NOTED

SIGNING PLAN 24
STA. 168+50 TO STA. 174+50

CONTRACT NUMBER
D264571

DRAWING NO. SP-24
SHEET NO. 151

IT IS A VIOLATION OF LAW FOR ANY PERSON, UNLESS THEY ARE ACTING UNDER THE DIRECTION OF A LICENSED PROFESSIONAL ENGINEER, ARCHITECT, LANDSCAPE ARCHITECT, OR LAND SURVEYOR, TO ALTER AN ITEM IN ANY WAY. IF AN ITEM BEARING THE STAMP OF A LICENSED PROFESSIONAL IS ALTERED, THE ALTERING ENGINEER, ARCHITECT, LANDSCAPE ARCHITECT, OR LAND SURVEYOR SHALL STAMP THE DOCUMENT AND INCLUDE THE NOTATION "ALTERED BY" FOLLOWED BY THEIR SIGNATURE, THE DATE OF SUCH ALTERATION, AND A SPECIFIC DESCRIPTION OF THE ALTERATION.

NEW YORK STATE OF OPPORTUNITY. Department of Transportation

PROJECT MANAGER S. S. VAIDYA
CHECK B.C. DANKERT
DRAFTING K.A. GORECKI
CHECK B.C. DANKERT
DESIGN K.A. GORECKI
JOB MANAGER R. F. SCHALLER
DESIGN SUPERVISOR S. S. VAIDYA

FILE NAME = 581361_CPH_SP_24.dgn
DATE/TIME = 22-JUN-2021 14:13
USER = kgorecki

PROJECT MANAGER S. S. VAIDYA
CHECK B.C. DANKERT
DRAFTING K.A. GORECKI
CHECK B.C. DANKERT
DESIGN K.A. GORECKI
JOB MANAGER R. F. SCHALLER
DESIGN SUPERVISOR S. S. VAIDYA

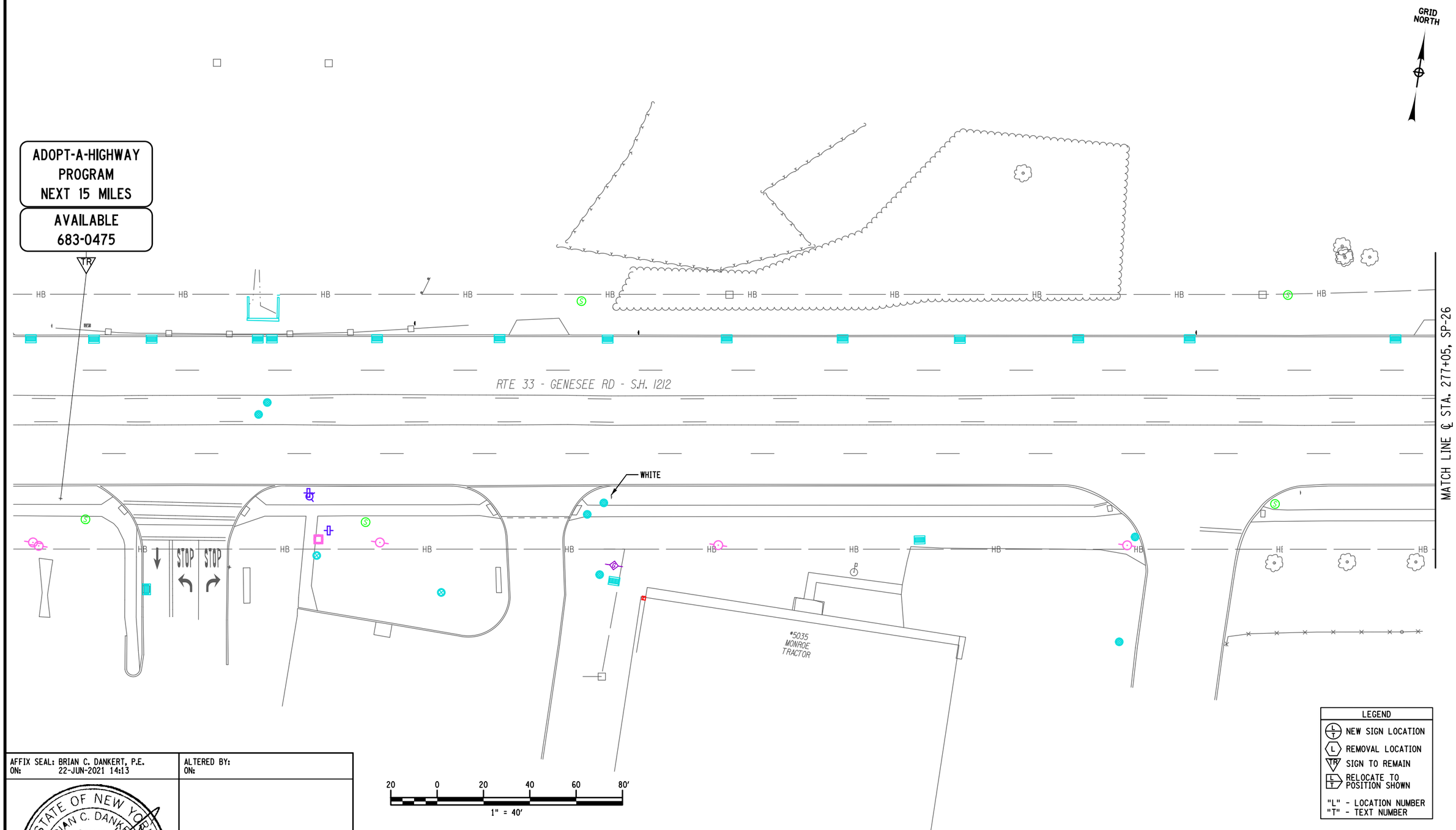

LEGEND

- NEW SIGN LOCATION
- REMOVAL LOCATION
- SIGN TO REMAIN
- RELOCATE TO POSITION SHOWN

"L" - LOCATION NUMBER
"T" - TEXT NUMBER

AFFIX SEAL: BRIAN C. DANKERT, P.E.
ON: 22-JUN-2021 14:13

ALTERED BY:
ON:

STATE OF NEW YORK · BRIAN C. DANKERT · No. 092443 · LICENSED PROFESSIONAL ENGINEER

AS-BUILT REVISIONS
DESCRIPTION OF ALTERATIONS:

NY 78, TRANSIT ROAD, S.H. 1334A-1
FRENCH ROAD TO WEHRLE DRIVE
TOWNS OF CHEEKTOWAGA & LANCASTER
VILLAGE OF DEPEW
COUNTY: ERIE REGION: 05

PIN 5813.61
NY 78
UTILITY QUALITY LEVEL D

BRIDGES

CULVERTS

ALL DIMENSIONS IN ft UNLESS OTHERWISE NOTED

SIGNING PLAN 25
SHEET 25 OF 27

CONTRACT NUMBER
D264571

DRAWING NO. SP-25
SHEET NO. 152

IT IS A VIOLATION OF LAW FOR ANY PERSON, UNLESS THEY ARE ACTING UNDER THE DIRECTION OF A LICENSED PROFESSIONAL ENGINEER, ARCHITECT, LANDSCAPE ARCHITECT, OR LAND SURVEYOR, TO ALTER AN ITEM IN ANY WAY. IF AN ITEM BEARING THE STAMP OF A LICENSED PROFESSIONAL IS ALTERED, THE ALTERING ENGINEER, ARCHITECT, LANDSCAPE ARCHITECT, OR LAND SURVEYOR SHALL STAMP THE DOCUMENT AND INCLUDE THE NOTATION "ALTERED BY" FOLLOWED BY THEIR SIGNATURE, THE DATE OF SUCH ALTERATION, AND A SPECIFIC DESCRIPTION OF THE ALTERATION.

NEW YORK STATE OF OPPORTUNITY. Department of Transportation

FILE NAME = 581361_CPH_SP_25.dgn
DATE/TIME = 22-JUN-2021 14:13
USER = kgorecki

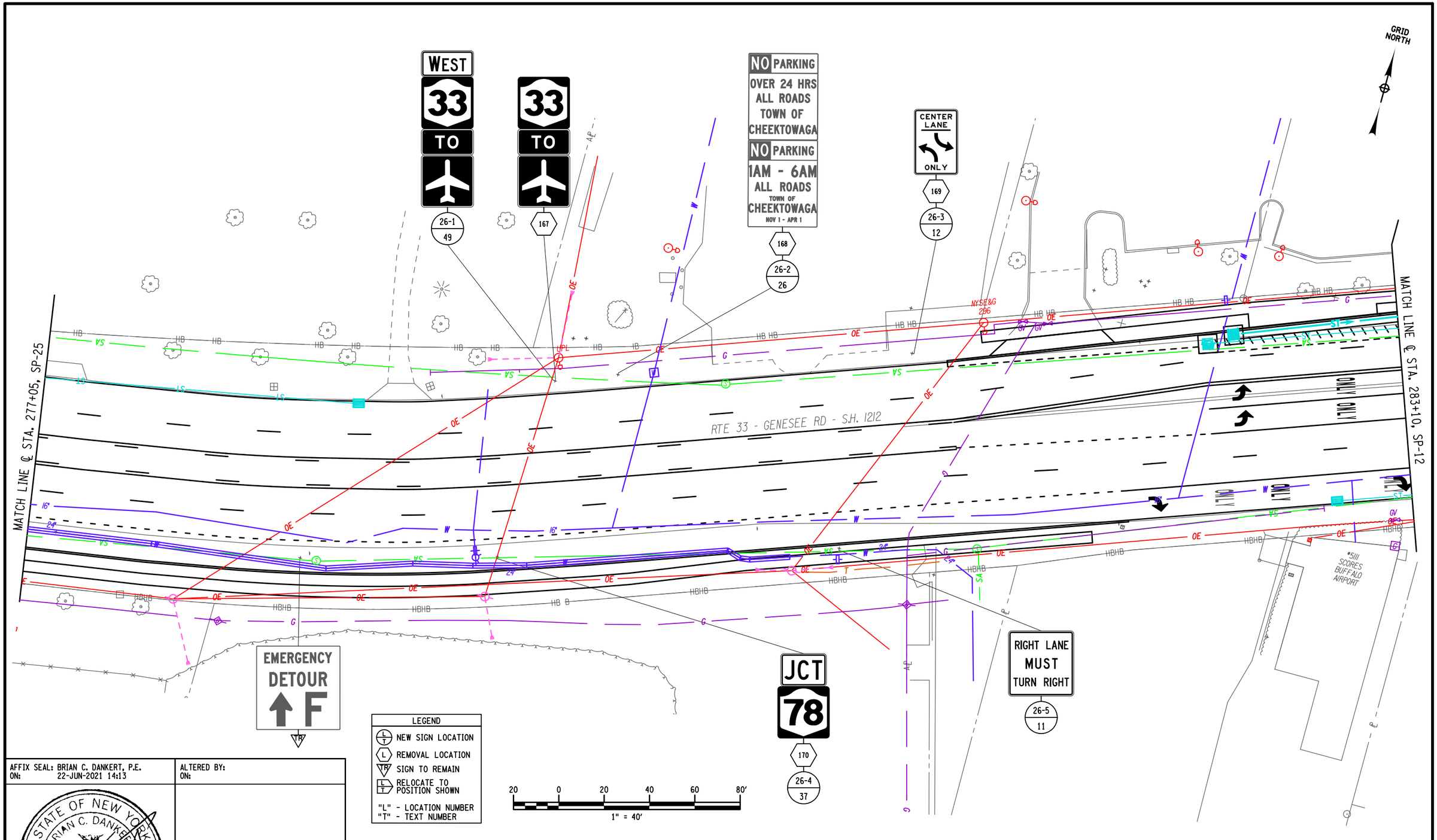

LEGEND

- NEW SIGN LOCATION
- REMOVAL LOCATION
- SIGN TO REMAIN
- RELOCATE TO POSITION SHOWN

"L" - LOCATION NUMBER
"T" - TEXT NUMBER

20 0 20 40 60 80′
1" = 40′

AFFIX SEAL: BRIAN C. DANKERT, P.E.
ON: 22-JUN-2021 14:13

STATE OF NEW YORK
BRIAN C. DANKERT
No. 092443
LICENSED PROFESSIONAL ENGINEER

ALTERED BY:
ON:

AS-BUILT REVISIONS
DESCRIPTION OF ALTERATIONS:

NY 78, TRANSIT ROAD, S.H. 1334A-1	PIN 5813.61	BRIDGES	CULVERTS	ALL DIMENSIONS IN ft UNLESS OTHERWISE NOTED	CONTRACT NUMBER
FRENCH ROAD TO WEHRLE DRIVE	NY 78			SIGNING PLAN 26	D264571
TOWNS OF CHEEKTOWAGA & LANCASTER	UTILITY QUALITY LEVEL D			STA. 277+.05 TO STA. 283+10	DRAWING NO. SP-26
VILLAGE OF DEPEW					SHEET NO. 153
COUNTY: ERIE REGION: 05					

IT IS A VIOLATION OF LAW FOR ANY PERSON, UNLESS THEY ARE ACTING UNDER THE DIRECTION OF A LICENSED PROFESSIONAL ENGINEER, ARCHITECT, LANDSCAPE ARCHITECT, OR LAND SURVEYOR, TO ALTER AN ITEM IN ANY WAY. IF AN ITEM BEARING THE STAMP OF A LICENSED PROFESSIONAL IS ALTERED, THE ALTERING ENGINEER, ARCHITECT, LANDSCAPE ARCHITECT, OR LAND SURVEYOR SHALL STAMP THE DOCUMENT AND INCLUDE THE NOTATION "ALTERED BY" FOLLOWED BY THEIR SIGNATURE, THE DATE OF SUCH ALTERATION, AND A SPECIFIC DESCRIPTION OF THE ALTERATION.

NEW YORK STATE OF OPPORTUNITY. Department of Transportation

PROJECT MANAGER S. S. VAIDYA
CHECK B.C. DANKERT
DRAFTING K.A. GORECKI
CHECK B.C. DANKERT
DESIGN K.A. GORECKI
JOB MANAGER R. F. SCHALLER
DESIGN SUPERVISOR S. S. VAIDYA

FILE NAME = 581361_CPH_SP_26.dgn
DATE/TIME = 22-JUN-2021 14:13
USER = kgorecki

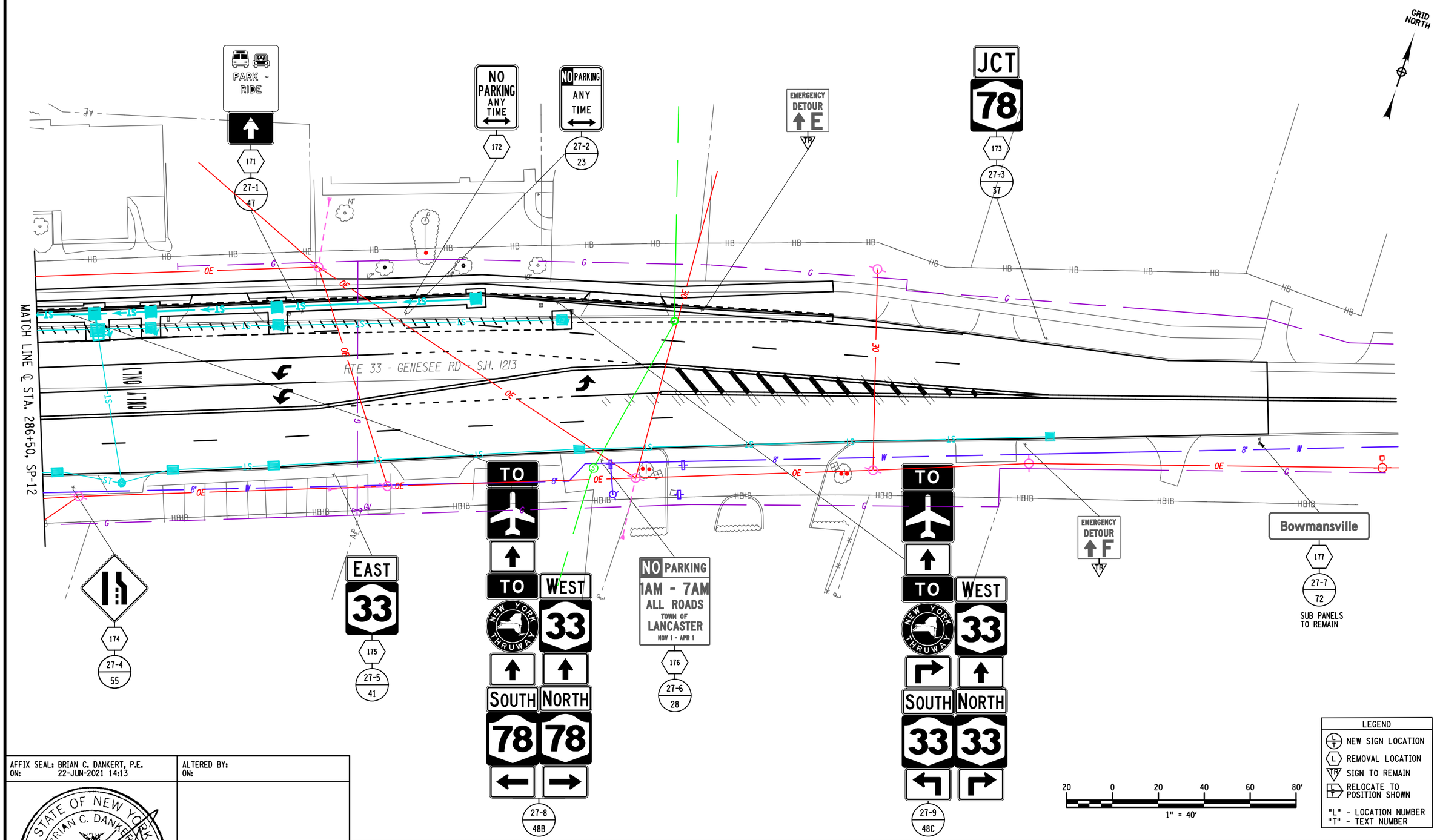

LEGEND

- NEW SIGN LOCATION
- REMOVAL LOCATION
- SIGN TO REMAIN
- RELOCATE TO POSITION SHOWN

"L" - LOCATION NUMBER
"T" - TEXT NUMBER

AFFIX SEAL: BRIAN C. DANKERT, P.E.
ON: 22-JUN-2021 14:13

STATE OF NEW YORK · BRIAN C. DANKERT · LICENSED PROFESSIONAL ENGINEER · No. 092443

ALTERED BY:
ON:

AS-BUILT REVISIONS
DESCRIPTION OF ALTERATIONS:

NY 78, TRANSIT ROAD, S.H. 1334A-1
FRENCH ROAD TO WEHRLE DRIVE
TOWNS OF CHEEKTOWAGA & LANCASTER
VILLAGE OF DEPEW
COUNTY: ERIE REGION: 05

PIN 5813.61
NY 78
UTILITY QUALITY LEVEL D

BRIDGES

CULVERTS

ALL DIMENSIONS IN ft UNLESS OTHERWISE NOTED

SIGNING PLAN 27
STA. 286+50 TO STA. 292+50

CONTRACT NUMBER
D264571

DRAWING NO. SP-27
SHEET NO. 154

IT IS A VIOLATION OF LAW FOR ANY PERSON, UNLESS THEY ARE ACTING UNDER THE DIRECTION OF A LICENSED PROFESSIONAL ENGINEER, ARCHITECT, LANDSCAPE ARCHITECT, OR LAND SURVEYOR, TO ALTER AN ITEM IN ANY WAY. IF AN ITEM BEARING THE STAMP OF A LICENSED PROFESSIONAL IS ALTERED, THE ALTERING ENGINEER, ARCHITECT, LANDSCAPE ARCHITECT, OR LAND SURVEYOR SHALL STAMP THE DOCUMENT AND INCLUDE THE NOTATION "ALTERED BY" FOLLOWED BY THEIR SIGNATURE, THE DATE OF SUCH ALTERATION, AND A SPECIFIC DESCRIPTION OF THE ALTERATION.

NEW YORK STATE OF OPPORTUNITY. Department of Transportation

PROJECT MANAGER S. S. VAIDYA
CHECK B.C. DANKERT
DRAFTING K.A. GORECKI
CHECK B.C. DANKERT
DESIGN K.A. GORECKI
JOB MANAGER R. F. SCHALLER
DESIGN SUPERVISOR S. S. VAIDYA

FILE NAME = 581361_CPH_SP_27.dgn
DATE/TIME = 22-JUN-2021 14:13
USER = kgorecki

TEXT NUMBER	LOCATION NUMBER	ITEM NUMBER	PAYMENT FACTOR	TOTAL QUANTITY	TEXT WxH (in.)		M.U.T.C.D. NUMBER	MOUNT
1	5-2, 11-6, 18-1, 18-7, 19-2, 20-1, 21-4, 22-4, 23-5 [9]	645.5102	9.0 S.F.	81.0 S.F.	STOP	36 x 36	R1-1	GR MTD
		645.81	2 Ea.	18 Ea.				
		645.81090003	2 Ea.	18 Ea.				
2	22-5 [1]	645.5102	7.5 S.F.	7.5 S.F.	SPEED LIMIT 30	30 x 36	R2-1	GR MTD
		645.81	1 Ea.	1 Ea.				
3	14-3 [1]	645.5102	7.5 S.F.	7.5 S.F.	SPEED LIMIT 35	30 x 36	R2-1	GR MTD
		645.81	1 Ea.	1 Ea.				
4	12-1-2, 18-5, 19-4, 22-2, 24-2 [5]	645.5102	7.5 S.F.	37.5 S.F.	SPEED LIMIT 40	30 x 36	R2-1	GR MTD
		645.81	1 Ea.	5 Ea.				
5	1-17, 6-1, 7-10, 11-7, 12-1-1, 12-1-3, 12-1-5, 17-2 [8]	645.5102	7.5 S.F.	60.0 S.F.	SPEED LIMIT 45	30 x 36	R2-1	GR MTD
		645.81	1 Ea.	8 Ea.				
5A	14-10, 16-4 [2]	645.5102	12.5 S.F.	25.0 S.F.	SPEED LIMIT 45	30 x 36	R2-1	GR MTD
		645.81	1 Ea.	2 Ea.	END SCHOOL SPEED LIMIT	24 X 30	S5-3	
6	24-8 [1]	645.5102	7.5 S.F.	7.5 S.F.	VILLAGE SPEED LIMIT 30	30 x 36	NYR2-5	GR MTD
		645.81	1 Ea.	1 Ea.				
7	1-6, 1-7, 12-2-6, 12-2-7, 12-2-8 [5]	680.8203	1 Ea.	5 Ea.	ONLY	30 x 36	R3-5L	OH MTD
8	1-11, 12-2-3, 12-2-11 [3]	680.8203	1 Ea.	3 Ea.	ONLY	30 x 36	R3-5R	OH MTD
9	1-8, 1-9, 1-10, 12-2-4, 12-2-5, 12-2-9, 12-2-10 [7]	680.8203	1 Ea.	7 Ea.	ONLY	30 x 36	R3-5a	OH MTD
10	7-3, 7-5, 7-6 [3]	645.5102	9.0 S.F.	27.0 S.F.	LEFT LANE MUST TURN LEFT	36 x 36	R3-7L	GR MTD
		645.81	2 Ea.	6 Ea.				

TEXT NUMBER	LOCATION NUMBER	ITEM NUMBER	PAYMENT FACTOR	TOTAL QUANTITY	TEXT WxH (in.)		M.U.T.C.D. NUMBER	MOUNT
11	1-1, 1-4, 2-1, 3-4, 3-10, 4-2, 5-8, 6-5, 11-9, 12-1-9, 17-1, 26-5 [12]	645.5102	9.0 S.F.	108.0 S.F.	RIGHT LANE MUST TURN RIGHT	36 x 36	R3-7R	GR MTD
		645.81	2 Ea.	24 Ea.				
		645.81090003	2 Ea.	24 Ea.				
12	5-7, 6-2, 8-6, 9-1, 10-1, 10-3, 11-3, 13-2, 14-7, 15-1, 21-2, 21-5, 23-2, 26-3 [14]	645.5102	6.0 S.F.	84.0 S.F.	CENTER LANE ONLY	24 x 36	R3-9B	GR MTD
		645.81	1 Ea.	14 Ea.				
13	1-12, 3-5, 3-6, 4-5, 6-12, 8-5 [6]	645.5102	5.0 S.F.	30.0 S.F.		24 X 30	R4-7	GR MTD
		645.81	1 Ea.	6 Ea.				
14	7-11 [1]	645.5102	6.0 S.F.	6.0 S.F.	STATE LAW DO NOT DRIVE ON SHOULDER	24 X 36	NYR9-9	GR MTD
		645.81	1 Ea.	1 Ea.				
15	6-10, 6-11 [2]	645.5102	6.3 S.F.	12.6 S.F.	DO NOT ENTER	30 x 30	R5-1	GR MTD
		645.81	1 Ea.	2 Ea.				
16	2-4, 2-5 [2]	645.5102	5.0 S.F.	10.0 S.F.	EMERGENCY VEHICLES ONLY	30 X 24	R5-11	GR MTD
		645.81	1 Ea.	2 Ea.				
17	2-3, 7-4 [2]	645.5102	6.0 S.F.	12.0 S.F.	ONE WAY	36 x 12	R6-1L	GR MTD
		645.81	2 Ea.	4 Ea.	B-B ONE WAY	36 x 12	R6-1R	
18	1-5, 7-9 [2]	645.5102	5.0 S.F.	10.0 S.F.	ONE WAY	24 x 30	R6-2R	GR MTD
		645.81	1 Ea.	2 Ea.				
19	27-2 [1]	645.5101	1.5 S.F.	1.5 S.F.	NO PARKING ANY TIME	12 x 18	NYP1-2D	GR MTD
		645.81	1 Ea.	1 Ea.				
20	1-14 [1]	645.5101	1.5 S.F.	1.5 S.F.	NO PARKING ANY TIME	12 x 18	NYP1-2L	GR MTD
		645.81	1 Ea.	1 Ea.				
21	1-16, 14-6 [2]	645.5101	1.5 S.F.	3.0 S.F.	NO PARKING ANY TIME	12 x 18	NYP1-2R	GR MTD
		645.81	1 Ea.	2 Ea.				
22	23-6 [1]	645.5101	1.5 S.F.	1.5 S.F.	NO PARKING HERE TO CORNER	12 x 18	NYP1-9R	GR MTD
		645.81	1 Ea.	1 Ea.				

LEGEND

SYMBOL	DESCRIPTION
GR MTD	GROUND MOUNTED
OH MTD	OVERHEAD MOUNTED
BR MTD	BRIDGE MOUNTED
PO MTD	POLE MOUNTED
B-B	BACK TO BACK
L / T	NEW SIGN LOCATION NUMBER TEXT NUMBER
L	SIGN REMOVAL
L / T	RELOCATE TO POSITION SHOWN
TR	TO REMAIN

GENERAL NOTES

1. SIGN LOCATIONS AS SHOWN ON PLANS ARE APPROXIMATE. THE CONTRACTOR SHALL RELOCATE EXISTING SIGNS AND INSTALL NEW SIGNS IN ACCORDANCE WITH THE MUTCD AND NYS SUPPLEMENT. THE EIC SHOULD CONTACT THE REGIONAL TRAFFIC ENGINEERING AND SAFETY GROUP WITH QUESTIONS.

2. THE PAYMENT FACTORS FOR SIGNS ARE FROM THE APPLICABLE STANDARD SHEETS OR SIGN FACE LAYOUTS.

3. THE PAYMENT FACTOR FOR POSTS IS THE NUMBER OF POSTS PROVIDED PER INSTALLATION.

AFFIX SEAL: BRIAN C. DANKERT, P.E.
ON: 22-JUN-2021 14:13

STATE OF NEW YORK · BRIAN C. DANKERT · No. 092443 · LICENSED PROFESSIONAL ENGINEER

ALTERED BY:
ON:

AS-BUILT REVISIONS
DESCRIPTION OF ALTERATIONS:

NY 78, TRANSIT ROAD, S.H. 1334A-1
FRENCH ROAD TO WEHRLE DRIVE
TOWNS OF CHEEKTOWAGA & LANCASTER
VILLAGE OF DEPEW
COUNTY: ERIE REGION: 05

PIN 5813.61
NY 78
UTILITY QUALITY LEVEL D

BRIDGES

CULVERTS

ALL DIMENSIONS IN ft UNLESS OTHERWISE NOTED

SIGN DATA SHEET 1

CONTRACT NUMBER D264571

DRAWING NO. SDS-1
SHEET NO. 155

IT IS A VIOLATION OF LAW FOR ANY PERSON, UNLESS THEY ARE ACTING UNDER THE DIRECTION OF A LICENSED PROFESSIONAL ENGINEER, ARCHITECT, LANDSCAPE ARCHITECT, OR LAND SURVEYOR, TO ALTER AN ITEM IN ANY WAY. IF AN ITEM BEARING THE STAMP OF A LICENSED PROFESSIONAL IS ALTERED, THE ALTERING ENGINEER, ARCHITECT, LANDSCAPE ARCHITECT, OR LAND SURVEYOR SHALL STAMP THE DOCUMENT AND INCLUDE THE NOTATION "ALTERED BY" FOLLOWED BY THEIR SIGNATURE, THE DATE OF SUCH ALTERATION, AND A SPECIFIC DESCRIPTION OF THE ALTERATION.

NEW YORK STATE OF OPPORTUNITY. Department of Transportation

DESIGN SUPERVISOR S. S. VAIDYA JOB MANAGER R. F. SCHALLER DESIGN KEITH A. GORECKI CHECK BRIAN C. DANKERT DRAFTING KEITH A. GORECKI CHECK BRIAN C. DANKERT PROJECT MANAGER S. S. VAIDYA

FILE NAME = 581361_CPH_SP_SDS_1.dgn
DATE/TIME = 22-JUN-2021 14:13
USER = kgorecki

TEXT NUMBER	LOCATION NUMBER	ITEM NUMBER	PAYMENT FACTOR	TOTAL QUANTITY	TEXT WxH (in.)		M.U.T.C.D. NUMBER	MOUNT
23	18-4, 18-6, 18-10, 19-3, 21-1, 21-6, 22-1, 22-3, 22-7, 23-1, 23-4, 23-8, 24-4, 24-5, 24-6, 24-9, 24-10, 27-2 [18]	645.5101	1.5 S.F.	27.0 S.F.	NO STANDING ANY TIME	12 X 18	NYP1-5D	GR MTD
		645.81	1 Ea.	18 Ea.				
24	5-3 [1]	645.5101	1.5 S.F.	1.5 S.F.	NO STANDING ANY TIME	12 x 18	NYP1-5R	GR MTD
		645.81	1 Ea.	1 Ea.				
25	3-7 [1]	645.5102	7.5 S.F.	7.5 S.F.	NO PARKING 1AM - 7AM ALL ROADS TOWN OF AMHERST NOV 1 - APR 1	30 X 36	R7-10NY	GR MTD
		645.81	1 Ea.	1 Ea.				
26	10-2, 26-2 [2]	645.5102	15.0 S.F.	30.0 S.F.	NO PARKING OVER 24 HRS ALL ROADS TOWN OF CHEEKTOWAGA	30 X 36	R7-10NY	GR MTD
		645.81	1 Ea.	1 Ea.	NO PARKING 1AM - 6AM ALL ROADS TOWN OF CHEEKTOWAGA NOV 1 - APR 1	30 X 36	R7-10NY	
27	17-4 [1]	645.5102	7.5 S.F.	7.5 S.F.	NO PARKING 2AM - 7AM ALL ROADS VILLAGE OF DEPEW NOV 15 - MAR 15	30 X 36	R7-10NY	GR MTD
		645.81	1 Ea.	1 Ea.				
28	27-6 [1]	645.5102	7.5 S.F.	7.5 S.F.	NO PARKING 1AM - 7AM ALL ROADS TOWN OF LANCASTER NOV 1 - APR 1	30 X 36	R7-10NY	GR MTD
		645.81	1 Ea.	1 Ea.				
29	1-2, 1-3, 1-13, 1-15 [4]	645.5102	7.5 S.F.	30.0 S.F.	RIGHT TURN ON RED MUST YIELD TO U-TURN	30 x 36	R10-30	GR MTD
		645.81	1 Ea.	4 Ea.				
30	3-2 [1]	645.5102	5.0 S.F.	5.0 S.F.	WEIGHT LIMIT 6 TONS	24 x 30	R12-1	GR MTD
		645.81	1 Ea.	1 Ea.				
31	7-12 [1]	645.5102	3.0 S.F.	5.2 S.F.	TRUCK ROUTE	24 X 18	R14-1	GR MTD
		645.81	1 Ea.	1 Ea.		21 X 15	M6-06R	GR MTD
32	8-4 [1]	645.5102	5.2 S.F.	5.2 S.F.	TRUCK ROUTE	24 X 18	R14-1	GR MTD
		645.81	1 Ea.	1 Ea.		21 x 15	M5-1L	

TEXT NUMBER	LOCATION NUMBER	ITEM NUMBER	PAYMENT FACTOR	TOTAL QUANTITY	TEXT WxH (in.)		M.U.T.C.D. NUMBER	MOUNT
33	3-9, 8-1 [2]	645.5102	6.2 S.F.	12.4 S.F.	JCT INTERSTATE 90	21 x 15	M2-1C	GR MTD
		645.81	1 Ea.	2 Ea.		24 x 24	M1-1	
34	5-6 [1]	645.5102	6.2 S.F.	6.2 S.F.	INTERSTATE 90	24 x 24	M1-1	GR MTD
		645.81	1 Ea.	1 Ea.		21 x 15	M5-1RC BLUE	
35	7-1 [1]	645.5102	6.2 S.F.	6.2 S.F.	INTERSTATE 90	24 x 24	M1-1	GR MTD
		645.81	1 Ea.	1 Ea.		21 x 15	M6-1LC BLUE	
36	6-7 [1]	645.5102	6.2 S.F.	6.2 S.F.	INTERSTATE 90	24 x 24	M1-1	GR MTD
		645.81	1 Ea.	1 Ea.		21 x 15	M6-1RC BLUE	
37	26-4, 27-3 [2]	645.5102	6.2 S.F.	12.4 S.F.	JCT 78	21 x 15	M2-1	GR MTD
		645.81	1 Ea.	2 Ea.		24 x 24	NYM3-1	
38	11-8, 13-1 [2]	645.5102	6.2 S.F.	12.4 S.F.	JCT 33	21 x 15	M2-1	GR MTD
		645.81	1 Ea.	2 Ea.		24 x 24	NYM3-1	
39	4-1, 11-2, 23-3 [3]	645.5102	6.0 S.F.	18.0 S.F.	NORTH 78	24 x 12	M3-1	GR MTD
		645.81	1 Ea.	3 Ea.		24 x 24	NYM3-1	
40	7-2, 8-2 [2]	645.5102	8.2 S.F.	16.4 S.F.	NORTH 78	24 x 12	M3-1	GR MTD
		645.81	1 Ea.	2 Ea.		24 x 24	NYM3-1	
						21 x 15	M6-3	

LEGEND

SYMBOL	DESCRIPTION
GR MTD	GROUND MOUNTED
OH MTD	OVERHEAD MOUNTED
BR MTD	BRIDGE MOUNTED
PO MTD	POLE MOUNTED
B-B	BACK TO BACK
L / T	NEW SIGN LOCATION NUMBER TEXT NUMBER
L	SIGN REMOVAL
L / T	RELOCATE TO POSITION SHOWN
TR	TO REMAIN

GENERAL NOTES

1. SIGN LOCATIONS AS SHOWN ON PLANS ARE APPROXIMATE. THE CONTRACTOR SHALL RELOCATE EXISTING SIGNS AND INSTALL NEW SIGNS IN ACCORDANCE WITH THE MUTCD AND NYS SUPPLEMENT. THE EIC SHOULD CONTACT THE REGIONAL TRAFFIC ENGINEERING AND SAFETY GROUP WITH QUESTIONS.

2. THE PAYMENT FACTORS FOR SIGNS ARE FROM THE APPLICABLE STANDARD SHEETS OR SIGN FACE LAYOUTS.

3. THE PAYMENT FACTOR FOR POSTS IS THE NUMBER OF POSTS PROVIDED PER INSTALLATION.

AFFIX SEAL: BRIAN C. DANKERT, P.E.
ON: 22-JUN-2021 14:13

ALTERED BY:
ON:

STATE OF NEW YORK · BRIAN C. DANKERT · No. 092413 · LICENSED PROFESSIONAL ENGINEER

AS-BUILT REVISIONS
DESCRIPTION OF ALTERATIONS:

NY 78, TRANSIT ROAD, S.H. 1334A-1
FRENCH ROAD TO WEHRLE DRIVE
TOWNS OF CHEEKTOWAGA & LANCASTER
VILLAGE OF DEPEW
COUNTY: ERIE REGION: 05

PIN 5813.61
NY 78
UTILITY QUALITY LEVEL D

BRIDGES

CULVERTS

ALL DIMENSIONS IN ft UNLESS OTHERWISE NOTED

SIGN DATA SHEET 2

CONTRACT NUMBER D264571

DRAWING NO. SDS-2
SHEET NO. 156

IT IS A VIOLATION OF LAW FOR ANY PERSON, UNLESS THEY ARE ACTING UNDER THE DIRECTION OF A LICENSED PROFESSIONAL ENGINEER, ARCHITECT, LANDSCAPE ARCHITECT, OR LAND SURVEYOR, TO ALTER AN ITEM IN ANY WAY. IF AN ITEM BEARING THE STAMP OF A LICENSED PROFESSIONAL IS ALTERED, THE ALTERING ENGINEER, ARCHITECT, LANDSCAPE ARCHITECT, OR LAND SURVEYOR SHALL STAMP THE DOCUMENT AND INCLUDE THE NOTATION "ALTERED BY" FOLLOWED BY THEIR SIGNATURE, THE DATE OF SUCH ALTERATION, AND A SPECIFIC DESCRIPTION OF THE ALTERATION.

NEW YORK STATE OF OPPORTUNITY. Department of Transportation

DESIGN SUPERVISOR S. S. VAIDYA
JOB MANAGER R. F. SCHALLER
DESIGN KEITH A. GORECKI
CHECK BRIAN C. DANKERT
DRAFTING KEITH A. GORECKI
CHECK BRIAN C. DANKERT
PROJECT MANAGER S. S. VAIDYA

FILE NAME = 581361_CPH_SP_SDS_2.dgn
DATE/TIME = 22-JUN-2021 14:13
USER = kgorecki

TEXT NUMBER	LOCATION NUMBER	ITEM NUMBER	PAYMENT FACTOR	TOTAL QUANTITY	TEXT WxH (in.)	M.U.T.C.D. NUMBER	MOUNT
41	27-5 1	645.5102	6.0 S.F.	6.0 S.F.	EAST 33 24 x 12 24 x 24	M3-2 NYM3-1	GR MTD
		645.81	1 Ea.	1 Ea.			
42	5-5, 6-6 2	645.5102	8.2 S.F.	16.4 S.F.	SOUTH 78 24 x 12 24 x 24 21 x 15	M3-3 NYM3-1 M6-3	GR MTD
		645.81	1 Ea.	2 Ea.			
43	12-1-8, 13-3, 18-9, 24-11 4	645.5102	6.0 S.F.	24.0 S.F.	SOUTH 78 24 x 12 24 x 24	M3-3 NYM3-1	GR MTD
		645.81	1 Ea.	4 Ea.			
44	1-18 1	645.5102	14.2 S.F.	14.2 S.F.	SOUTH 78 24 x 12 24 x 24 TO INTERSTATE 90 24 x 12 24 x 24 21 x 15	M3-3 NYM3-1 M4-5C (BLUE) M1-1 M6-3C (BLUE)	GR MTD
		645.8106	1 Ea.	1 Ea.			
45	12-1-7 1	645.5102	32.8 S.F.	32.8 S.F.	TO INTERSTATE 90 EAST 33 24 x 12 24 x 12 24 x 24 24 x 24 21 x 15 21 x 15 NORTH 78 SOUTH 78 24 x 12 24 x 12 24 x 24 24 x 24 21 x 15 21 x 15	M4-5C (BLUE) M3-2 M1-1 NYM3-1 M6-1LC (BLUE) M6-3 M3-1 M3-3 NYM3-1 NYM3-1 M6-1L M6-1R	GR MTD
		645.8106	2 Ea.	2 Ea.			
46	12-2-1 1	645.5102	39.0 S.F.	39.0 S.F.	SOUTH 78 TO 24 x 12 24 x 12 24 x 24 24 x 24 21 x 15 21 x 15 EAST 33 WEST 33 24 x 12 24 x 12 24 x 24 24 x 24 21 x 15 PARK - RIDE 24 x 24 21 x 15	M3-3 M4-5C (GREEN) NYM3-1 I-5 M6-3 M6-1RC (GREEN) M3-2 M3-4 NYM3-1 NYM3-1 M6-1L M6-1L D4-2BCR (GREEN) M6-1RC (GREEN)	GR MTD
		645.8106	2 Ea.	2 Ea.			
47	18-3, 27-1 2	645.5102	6.2 S.F.	12.4 S.F.	PARK - RIDE 24 x 24 21 x 15	D4-2BCR (GREEN) M6-3C (GREEN)	GR MTD
		645.81	1 Ea.	2 Ea.			
47A	11-11 1	645.5102	39.0 S.F.	39.0 S.F.	SOUTH 78 TO 24 x 12 24 x 12 24 x 24 24 x 24 21 x 15 21 x 15 EAST 33 WEST 33 24 x 12 24 x 12 24 x 24 24 x 24 21 x 15 PARK - RIDE 24 x 24 21 x 15	M3-3 M4-5C (GREEN) NYM3-1 I-5 M6-3 M5-1RC (GREEN) M3-2 M3-4 NYM3-1 NYM3-1 M5-1L M5-1R D4-2BCR (GREEN) M5-1RC (GREEN)	GR MTD
		645.8106	2 Ea.	2 Ea.			
48	12-2-2 1	645.5102	41.0 S.F.	41.0 S.F.	TO NEW YORK THRUWAY 24 x 12 24 x 24 21 x 15 TO NORTH 78 24 x 12 24 x 12 24 x 24 24 x 24 21 x 15 21 x 15 WEST 33 EAST 33 24 x 12 24 x 12 24 x 24 24 x 24 21 x 15 21 x 15	M4-5C (BLUE) M1-10TWYNY M6-1LC (BLUE) M4-5C (GREEN) M3-1 I-5 NYM3-1 M6-1LC (GREEN) M6-3 M3-4 M3-2 NYM3-1 NYM3-1 M6-1L M6-1R	GR MTD
		645.8106	2 Ea.	2 Ea.			

LEGEND

SYMBOL	DESCRIPTION
GR MTD	GROUND MOUNTED
OH MTD	OVERHEAD MOUNTED
BR MTD	BRIDGE MOUNTED
PO MTD	POLE MOUNTED
B-B	BACK TO BACK
L / T	NEW SIGN LOCATION NUMBER TEXT NUMBER
L	SIGN REMOVAL
L / T	RELOCATE TO POSITION SHOWN
TR	TO REMAIN

GENERAL NOTES

1. SIGN LOCATIONS AS SHOWN ON PLANS ARE APPROXIMATE. THE CONTRACTOR SHALL RELOCATE EXISTING SIGNS AND INSTALL NEW SIGNS IN ACCORDANCE WITH THE MUTCD AND NYS SUPPLEMENT. THE EIC SHOULD CONTACT THE REGIONAL TRAFFIC ENGINEERING AND SAFETY GROUP WITH QUESTIONS.

2. THE PAYMENT FACTORS FOR SIGNS ARE FROM THE APPLICABLE STANDARD SHEETS OR SIGN FACE LAYOUTS.

3. THE PAYMENT FACTOR FOR POSTS IS THE NUMBER OF POSTS PROVIDED PER INSTALLATION.

AFFIX SEAL: BRIAN C. DANKERT, P.E.
ON: 22-JUN-2021 14:13

STATE OF NEW YORK · BRIAN C. DANKERT · No. 092443 · LICENSED PROFESSIONAL ENGINEER

ALTERED BY:
ON:

AS-BUILT REVISIONS
DESCRIPTION OF ALTERATIONS:

NY 78, TRANSIT ROAD, S.H. 1334A-1
FRENCH ROAD TO WEHRLE DRIVE
TOWNS OF CHEEKTOWAGA & LANCASTER
VILLAGE OF DEPEW
COUNTY: ERIE REGION: 05

PIN 5813.61
NY 78
UTILITY QUALITY LEVEL D

BRIDGES

CULVERTS

ALL DIMENSIONS IN ft UNLESS OTHERWISE NOTED

SIGN DATA SHEET 3

CONTRACT NUMBER D264571

DRAWING NO. SDS-3
SHEET NO. 157

IT IS A VIOLATION OF LAW FOR ANY PERSON, UNLESS THEY ARE ACTING UNDER THE DIRECTION OF A LICENSED PROFESSIONAL ENGINEER, ARCHITECT, LANDSCAPE ARCHITECT, OR LAND SURVEYOR, TO ALTER AN ITEM IN ANY WAY. IF AN ITEM BEARING THE STAMP OF A LICENSED PROFESSIONAL IS ALTERED, THE ALTERING ENGINEER, ARCHITECT, LANDSCAPE ARCHITECT, OR LAND SURVEYOR SHALL STAMP THE DOCUMENT AND INCLUDE THE NOTATION "ALTERED BY" FOLLOWED BY THEIR SIGNATURE, THE DATE OF SUCH ALTERATION, AND A SPECIFIC DESCRIPTION OF THE ALTERATION.

NEW YORK STATE OF OPPORTUNITY. Department of Transportation

DESIGN SUPERVISOR S. S. VAIDYA
JOB MANAGER R. F. SCHALLER
DESIGN KEITH A. GORECKI
CHECK BRIAN C. DANKERT
DRAFTING KEITH A. GORECKI
CHECK BRIAN C. DANKERT
PROJECT MANAGER S. S. VAIDYA

FILE NAME = 581361_CPH_SP_SDS_3.dgn
DATE/TIME = 22-JUN-2021 14:13
USER = kgorecki

TEXT NUMBER	LOCATION NUMBER	ITEM NUMBER	PAYMENT FACTOR	TOTAL QUANTITY	TEXT WxH (in.)	M.U.T.C.D. NUMBER	MOUNT
48A	12-2-12 [1]	645.5102	41.0 S.F.	41.0 S.F.	TO NEW YORK THRUWAY TO NORTH 78 WEST EAST 33 33	M4-5C (BLUE) M1-1OTWYNY M5-1LC (BLUE) M4-5C (GREEN) M3-1 I-5 NYM3-1 M5-1LC (GREEN) M6-3 M3-4 M3-2 NYM3-1 NYM3-1 M5-1L M5-1R	GR MTD
		645.8106	2 Ea.	2 Ea.	24 x 12 24 x 24 21 x 15 24 x 12 24 x 12 24 x 24 24 x 24 21 x 15 21 x 15 24 x 12 24 x 12 24 x 24 24 x 24 21 x 15 21 x 15		
48B	27-8 [1]	645.5102	41.0 S.F.	41.0 S.F.	TO NEW YORK THRUWAY TO WEST 33 SOUTH NORTH 78 78	M4-5C (BLUE) M1-1OTWYNY M6-1RC (BLUE) M4-5C (GREEN) M3-4 I-5 NYM3-1 M6-3C (GREEN) M6-3 M3-3 M3-1 NYM3-1 NYM3-1 M6-1L M6-1R	GR MTD
		645.8106	2 Ea.	2 Ea.	24 x 12 24 x 24 21 x 15 24 x 12 24 x 12 24 x 24 24 x 24 21 x 15 21 x 15 24 x 12 24 x 12 24 x 24 24 x 24 21 x 15 21 x 15		

TEXT NUMBER	LOCATION NUMBER	ITEM NUMBER	PAYMENT FACTOR	TOTAL QUANTITY	TEXT WxH (in.)	M.U.T.C.D. NUMBER	MOUNT
48C	27-9 [1]	645.5102	41.0 S.F.	41.0 S.F.	TO NEW YORK THRUWAY TO WEST 33 SOUTH NORTH 78 78	M4-5C (BLUE) M1-1OTWYNY M5-1R (BLUE) M4-5C (GREEN) M3-4 I-5 NYM3-1 M6-3C (GREEN) M6-3 M3-3 M3-1 NYM3-1 NYM3-1 M5-1L M5-1R	GR MTD
		645.8106	2 Ea.	2 Ea.	24 x 12 24 x 24 21 x 15 24 x 12 24 x 12 24 x 24 24 x 24 21 x 15 21 x 15 24 x 12 24 x 12 24 x 24 24 x 24 21 x 15 21 x 15		
49	12-1-4, 26-1 [2]	645.5102	14.2 S.F.	24.4 S.F.	WEST 33 TO	24 x 12 24 x 24 24 x 12 24 x 24	M3-4 NYM3-1 M4-5C (GREEN) I-5	GR MTD
		645.81	1 Ea.	2 Ea.			
50	7-8 [1]	645.5102	14.2 S.F.	14.2 S.F.	TO SOUTH 78	24 x 12 24 x 24 24 x 12 24 x 24	M4-5C (GREEN) I-5 M3-3 NYM3-1	GR MTD
		645.81	1 Ea.	1 Ea.			
51	8-3 [1]	645.5102	8.0 S.F.	8.0 S.F.		48 x 24	W1-7	GR MTD
		645.81	2 Ea.	2 Ea.			
52	3-3 [1]	645.5102	8.6 S.F.	8.6 S.F.	15 MPH	36 x 36 18 X 18	W2-6 W13-1	GR MTD
		645.81	2 Ea.	2 Ea.			
53	17-3 [1]	645.5102	9.0 S.F.	9.0 S.F.	SPEED LIMIT 40	36 x 36	W3-5	GR MTD
		645.81	2 Ea.	2 Ea.			
54	6-4 [1]	645.5102	9.0 S.F.	9.0 S.F.		36 x 36	W4-1R	GR MTD
		645.81	2 Ea.	2 Ea.			

LEGEND

SYMBOL	DESCRIPTION
GR MTD	GROUND MOUNTED
OH MTD	OVERHEAD MOUNTED
BR MTD	BRIDGE MOUNTED
PO MTD	POLE MOUNTED
B-B	BACK TO BACK
L / T	NEW SIGN LOCATION NUMBER TEXT NUMBER
L	SIGN REMOVAL
L / T	RELOCATE TO POSITION SHOWN
TR	TO REMAIN

GENERAL NOTES

1. SIGN LOCATIONS AS SHOWN ON PLANS ARE APPROXIMATE. THE CONTRACTOR SHALL RELOCATE EXISTING SIGNS AND INSTALL NEW SIGNS IN ACCORDANCE WITH THE MUTCD AND NYS SUPPLEMENT. THE EIC SHOULD CONTACT THE REGIONAL TRAFFIC ENGINEERING AND SAFETY GROUP WITH QUESTIONS.

2. THE PAYMENT FACTORS FOR SIGNS ARE FROM THE APPLICABLE STANDARD SHEETS OR SIGN FACE LAYOUTS.

3. THE PAYMENT FACTOR FOR POSTS IS THE NUMBER OF POSTS PROVIDED PER INSTALLATION.

AFFIX SEAL: BRIAN C. DANKERT, P.E.
ON: 22-JUN-2021 14:13

STATE OF NEW YORK · BRIAN C. DANKERT · No. 092443 · LICENSED PROFESSIONAL ENGINEER

ALTERED BY:
ON:

AS-BUILT REVISIONS
DESCRIPTION OF ALTERATIONS:

NY 78, TRANSIT ROAD, S.H. 1334A-1
FRENCH ROAD TO WEHRLE DRIVE
TOWNS OF CHEEKTOWAGA & LANCASTER
VILLAGE OF DEPEW
COUNTY: ERIE REGION: 05

PIN 5813.61
NY 78
UTILITY QUALITY LEVEL D

BRIDGES

CULVERTS

ALL DIMENSIONS IN ft UNLESS OTHERWISE NOTED

SIGN DATA SHEET 4

CONTRACT NUMBER D264571

DRAWING NO. SDS-4
SHEET NO. 158

IT IS A VIOLATION OF LAW FOR ANY PERSON, UNLESS THEY ARE ACTING UNDER THE DIRECTION OF A LICENSED PROFESSIONAL ENGINEER, ARCHITECT, LANDSCAPE ARCHITECT, OR LAND SURVEYOR, TO ALTER AN ITEM IN ANY WAY. IF AN ITEM BEARING THE STAMP OF A LICENSED PROFESSIONAL IS ALTERED, THE ALTERING ENGINEER, ARCHITECT, LANDSCAPE ARCHITECT, OR LAND SURVEYOR SHALL STAMP THE DOCUMENT AND INCLUDE THE NOTATION "ALTERED BY" FOLLOWED BY THEIR SIGNATURE, THE DATE OF SUCH ALTERATION, AND A SPECIFIC DESCRIPTION OF THE ALTERATION.

NEW YORK STATE OF OPPORTUNITY. Department of Transportation

DESIGN SUPERVISOR S. S. VAIDYA
JOB MANAGER R. F. SCHALLER
DESIGN KEITH A. GORECKI
CHECK BRIAN C. DANKERT
DRAFTING KEITH A. GORECKI
CHECK BRIAN C. DANKERT
PROJECT MANAGER S. S. VAIDYA

FILE NAME = 581361_CPH_SP_SDS_4.dgn
DATE/TIME = 22-JUN-2021 14:13
USER = kgorecki

TEXT NUMBER	LOCATION NUMBER	ITEM NUMBER	PAYMENT FACTOR	TOTAL QUANTITY	TEXT WxH (in.)	M.U.T.C.D. NUMBER	MOUNT
55	7-7, 27-5	645.5102	9.0 S.F.	18.0 S.F.	36 x 36	W4-2R	GR MTD
	2	645.81	2 Ea.	4 Ea.			
56	6-8	645.5102	9.0 S.F.	9.0 S.F.	RIGHT LANE ENDS 36 x 36	W9-1R	GR MTD
	1	645.81	2 Ea.	2 Ea.			
57	11-5	645.5102	9.0 S.F.	9.0 S.F.	NO OUTLET 36 x 36	W14-2	GR MTD
	1	645.81	2 Ea.	2 Ea.			
58	6-9	645.5102	11.0 S.F.	11.0 S.F.	36 x 36	W11-2L	GR MTD
		645.81	2 Ea.	2 Ea.		FLUORESENT YELLOW/GREEN	
	1	645.81090003	2 Ea.	2 Ea.	24 x 12	W16-7PL	
59	6-3	645.5102	11.0 S.F.	11.0 S.F.	36 x 36	W11-2R	GR MTD
		645.81	2 Ea.	2 Ea.		FLUORESENT YELLOW/GREEN	
	1	645.81090003	2 Ea.	2 Ea.	24 x 12	W16-7PR	
59A	6-12	645.5102	11.0 S.F.	11.0 S.F.	36 x 36	W11-2R	GR MTD
		645.81	2 Ea.	2 Ea.		FLUORESENT YELLOW/GREEN	
	1	645.81090003	2 Ea.	2 Ea.	AHEAD 24 x 12	W16-9P	
60	14-9, 16-2	645.5102	11.0 S.F.	20.6 S.F.	36 x 36	S1-1L	GR MTD
		645.81	2 Ea.	4 Ea.		FLUORESENT YELLOW/GREEN	
	2	645.81090003	2 Ea.	4 Ea.	SCHOOL 24 x 8	S4-3P FLUORESENT YELLOW/GREEN	
61	2-2	645.5102	9.0 S.F.	9.0 S.F.	ECC 24 x 15	NYM14-27	GR MTD
		645.81	1 Ea.	1 Ea.	24 x 24	NYM8-5	
	1				21 x 15	M6-3L (GREEN)	
62	2-6	645.5102	9.0 S.F.	9.0 S.F.	TROCAIRE 24 x 15	NYM14-27	GR MTD
		645.81	1 Ea.	1 Ea.	24 x 24	NYM8-5	
	1				21 x 15	M5-1LC (GREEN)	

TEXT NUMBER	LOCATION NUMBER	ITEM NUMBER	PAYMENT FACTOR	TOTAL QUANTITY	TEXT WxH (in.)	M.U.T.C.D. NUMBER	MOUNT
63	4-3	645.5102	9.0 S.F.	9.0 S.F.	TROCAIRE 24 x 15	NYM14-27	GR MTD
		645.81	1 Ea.	1 Ea.	24 x 24	NYM8-5	
	1				21 x 15	M5-1RC (GREEN)	
64	5-1, 5-9	645.5101	3.0 S.F.	6.0 S.F.	12 X 36	OM3-R	BR MTD
	2						
65	14-8, 16-1	645.5102	13.8 S.F.	27.6 S.F.	SCHOOL 24 x 8	S4-3P	GR MTD
		645.81	1 Ea.	2 Ea.	SPEED LIMIT 35 30 x 36	R2-1	
	2				7:00 AM - 6:00 PM SCHOOL DAYS 24 x 12	NYR7-4	
					FINES HIGHER 24 x 18	R2-6	
66	14-2	645.5102	16.1 S.F.	16.1 S.F.	SCHOOL 18 X 18 (2)	OM1-3NY	GR MTD
		645.81	1 Ea.	1 Ea.	24 x 8	S4-3P	
	1				SPEED LIMIT 35 30 x 36	R2-1	
					7:00 AM - 6:00 PM SCHOOL DAYS 24 x 12	NYR7-4	
					FINES HIGHER 24 x 18	R2-6	
66A	14-11, 16-3	645.5102	5.0 S.F.	10.0 S.F.	END SCHOOL ZONE 24 X 30	S5-2	GR MTD
	2	645.81	1 Ea.	2 Ea.			
67	24-1	645.5102	24.5 S.F.	24.5 S.F.	Geo. Urban Blvd → 48 X 24	D3-1	GR MTD
		645.8106	1 Ea	1 Ea	11'-9" 36 X 36	W12-2	
	1				1 MILE AHEAD 30 X 24	W16-3P	
68	24-3	645.5102	24.5 S.F.	24.5 S.F.	Geo. Urban ← Blvd 48 X 24	D3-1	GR MTD
		645.8106	1 Ea	1 Ea	11'-9" 36 X 36	W12-2	
	1				1 MILE AHEAD 30 X 24	W16-3P	
69	24-7	645.5102	24.0 S.F.	24.0 S.F.	11'-9" 36 X 36	W12-2	GR MTD
		645.8106	1 Ea	1 Ea	1 MILE AHEAD 30 X 24	W16-3P	
	1				WEIGHT LIMIT 5 TONS 24 x 30	R12-1	

LEGEND

SYMBOL	DESCRIPTION
GR MTD	GROUND MOUNTED
OH MTD	OVERHEAD MOUNTED
BR MTD	BRIDGE MOUNTED
PO MTD	POLE MOUNTED
B-B	BACK TO BACK
L / T	NEW SIGN LOCATION NUMBER TEXT NUMBER
L	SIGN REMOVAL
L / T	RELOCATE TO POSITION SHOWN
TR	TO REMAIN

GENERAL NOTES

1. SIGN LOCATIONS AS SHOWN ON PLANS ARE APPROXIMATE. THE CONTRACTOR SHALL RELOCATE EXISTING SIGNS AND INSTALL NEW SIGNS IN ACCORDANCE WITH THE MUTCD AND NYS SUPPLEMENT. THE EIC SHOULD CONTACT THE REGIONAL TRAFFIC ENGINEERING AND SAFETY GROUP WITH QUESTIONS.

2. THE PAYMENT FACTORS FOR SIGNS ARE FROM THE APPLICABLE STANDARD SHEETS OR SIGN FACE LAYOUTS.

3. THE PAYMENT FACTOR FOR POSTS IS THE NUMBER OF POSTS PROVIDED PER INSTALLATION.

AFFIX SEAL: BRIAN C. DANKERT, P.E.
ON: 22-JUN-2021 14:13

STATE OF NEW YORK · BRIAN C. DANKERT · No. 092413 · LICENSED PROFESSIONAL ENGINEER

ALTERED BY:
ON:

AS-BUILT REVISIONS
DESCRIPTION OF ALTERATIONS:

NY 78, TRANSIT ROAD, S.H. 1334A-1
FRENCH ROAD TO WEHRLE DRIVE
TOWNS OF CHEEKTOWAGA & LANCASTER
VILLAGE OF DEPEW
COUNTY: ERIE REGION: 05

PIN 5813.61
NY 78
UTILITY QUALITY LEVEL D

BRIDGES

CULVERTS

ALL DIMENSIONS IN ft UNLESS OTHERWISE NOTED

SIGN DATA SHEET 5

CONTRACT NUMBER D264571

DRAWING NO. SDS-5
SHEET NO. 159

IT IS A VIOLATION OF LAW FOR ANY PERSON, UNLESS THEY ARE ACTING UNDER THE DIRECTION OF A LICENSED PROFESSIONAL ENGINEER, ARCHITECT, LANDSCAPE ARCHITECT, OR LAND SURVEYOR, TO ALTER AN ITEM IN ANY WAY. IF AN ITEM BEARING THE STAMP OF A LICENSED PROFESSIONAL IS ALTERED, THE ALTERING ENGINEER, ARCHITECT, LANDSCAPE ARCHITECT, OR LAND SURVEYOR SHALL STAMP THE DOCUMENT AND INCLUDE THE NOTATION "ALTERED BY" FOLLOWED BY THEIR SIGNATURE, THE DATE OF SUCH ALTERATION, AND A SPECIFIC DESCRIPTION OF THE ALTERATION.

NEW YORK STATE OF OPPORTUNITY. Department of Transportation

DESIGN SUPERVISOR S. S. VAIDYA
JOB MANAGER R. F. SCHALLER
DESIGN KEITH A. GORECKI
CHECK BRIAN C. DANKERT
DRAFTING KEITH A. GORECKI
CHECK BRIAN C. DANKERT
PROJECT MANAGER S. S. VAIDYA

FILE NAME = 581361_CPH_SP_SDS_5.dgn
DATE/TIME = 22-JUN-2021 14:13
USER = kgorecki

TEXT NUMBER	LOCATION NUMBER	ITEM NUMBER	PAYMENT FACTOR	TOTAL QUANTITY	TEXT WxH (in.)	M.U.T.C.D. NUMBER	MOUNT
70	14-1 [1]	645.5102	8.0 S.F.	8.0 S.F.	Town Of Lancaster 48 X 24	D3-1	GR MTD
		645.81	2 Ea.	2 Ea.			
71	19-4 [1]	645.5102	2.3 S.F.	2.3 S.F.	PLOWS GO SLOW 18 X 18	D3-1	GR MTD
72	27-7 [1]	645.5102	8.3 S.F.	8.3 S.F.	Bowmansville 66 X 18	D3-1	GR MTD
		645.81	2 Ea.	2 Ea.			
73	3-1, 3-8, 5-4, 8-7, 11-1, 11-4 [6]	645.5102	15.0 S.F.	90 S.F.	Transit Rd 60 x 18 BACK TO BACK	D3-1	GR MTD B-B
		645.81	2 Ea	12 Ea	Transit Rd 60 x 18		
74	3-1, 3-8 [2]	645.5102	18.0 S.F.	36.0 S.F.	Freeman Rd 72 x 18 BACK TO BACK	D3-1	GR MTD B-B
		645.81	-	-	Freeman Rd 72 x 18		
75	5-4 [1]	645.5102	13.5 S.F.	13.5 S.F.	Maple Dr 54 x 18 BACK TO BACK	D3-1	GR MTD B-B
		645.81	-	-	Maple Dr 54 x 18		
76	8-7 [1]	645.5102	12.0 S.F.	12.0 S.F.	Aero Dr 48 x 18 BACK TO BACK	D3-1	GR MTD B-B
		645.81	--	-	Aero Dr 48 x 18		
77	11-1 [1]	645.5102	12.0 S.F.	12.0 S.F.	Pasquale Dr 72 x 18 BACK TO BACK	D3-1	GR MTD B-B
		645.81	-	-	Pasquale Dr 72 x 18		
78	11-4 [1]	645.5102	12.0 S.F.	12.0 S.F.	Pfohl Rd 54 x 18 BACK TO BACK	D3-1	GR MTD B-B
		645.81	-	-	Pfohl Rd 54 x 18		
79	18-2, 18-8, 19-1, 20-2, 21-3, 22-6, 23-7 [7]	645.5102	8.0 S.F.	56.0 S.F.	Transit Rd 48 X 12 BACK TO BACK	D3-1	GR MTD B-B
		645.81	2 Ea	14 Ea	Transit Rd 48 X 12		
80	18-2, 18-8 [2]	645.5102	7.0 S.F.	14.0 S.F.	Rehm Rd 42 X 12 BACK TO BACK	D3-1	GR MTD B-B
		645.81	-	-	Rehm Rd 42 X 12		

TEXT NUMBER	LOCATION NUMBER	ITEM NUMBER	PAYMENT FACTOR	TOTAL QUANTITY	TEXT WxH (in.)	M.U.T.C.D. NUMBER	MOUNT
81	19-1 [1]	645.5102	8.0 S.F.	8.0 S.F.	Hanwell Pl 48 X 12 BACK TO BACK	D3-1	GR MTD B-B
		645.81	-	-	Hanwell Pl 48 X 12		
82	20-2 [1]	645.5102	6.0 S.F.	6.0 S.F.	Lee St 36 X 12 BACK TO BACK	D3-1	GR MTD B-B
		645.81	-	-	Lee St 36 X 12		
83	21-3 [1]	645.5102	9.0 S.F.	9.0 S.F.	Airview Ter 54 X 12 BACK TO BACK	D3-1	GR MTD B-B
		645.81	-	-	Airview Ter 54 X 12		
84	22-6 [1]	645.5102	7.0 S.F.	7.0 S.F.	Entry Dr 42 X 12 BACK TO BACK	D3-1	GR MTD B-B
		645.81	-	-	Entry Dr 42 X 12		
85	23-7 [1]	645.5102	7.0 S.F.	7.0 S.F.	Argus Dr 42 X 12 BACK TO BACK	D3-1	GR MTD B-B
		645.81	-	-	Argus Dr 42 X 12		
86	4-4, 12-1-6 [2]	645.5102	24.5 S.F.	49.0 S.F.	Town Of Cheektowaga 84 x 42	D3-1	GR MTD
		645.81	2 Ea	4 Ea			
87	14-4, 14-5 [2]	645.5102	22.5 S.F.	45.0 S.F.	Pleasant View Dr 54 X 36	D3-1	GR MTD
		645.81	2 Ea	4 Ea	5 TON WEIGHT LIMIT 36 X 36	W12-2xNY	
88	8-8 [1]	645.5102	18.0 S.F.	18.0 S.F.	EMERGENCY DETOUR ↑E 36 X 36	GUIDE	GR MTD
		645.81	2 Ea	2 Ea	EMERGENCY DETOUR ↑F 36 X 36	GUIDE	
89	11-10 [1]	645.5102	18.0 S.F.	18.0 S.F.	EMERGENCY DETOUR ↰F / EMERGENCY DETOUR E↱ 36 X 36 (2)	GUIDE	GR MTD
		645.81	2 Ea	2 Ea			

LEGEND

SYMBOL	DESCRIPTION
GR MTD	GROUND MOUNTED
OH MTD	OVERHEAD MOUNTED
BR MTD	BRIDGE MOUNTED
PO MTD	POLE MOUNTED
B-B	BACK TO BACK
L / T	NEW SIGN LOCATION NUMBER TEXT NUMBER
L	SIGN REMOVAL
L / T	RELOCATE TO POSITION SHOWN
TR	TO REMAIN

GENERAL NOTES

1. SIGN LOCATIONS AS SHOWN ON PLANS ARE APPROXIMATE. THE CONTRACTOR SHALL RELOCATE EXISTING SIGNS AND INSTALL NEW SIGNS IN ACCORDANCE WITH THE MUTCD AND NYS SUPPLEMENT. THE EIC SHOULD CONTACT THE REGIONAL TRAFFIC ENGINEERING AND SAFETY GROUP WITH QUESTIONS.

2. THE PAYMENT FACTORS FOR SIGNS ARE FROM THE APPLICABLE STANDARD SHEETS OR SIGN FACE LAYOUTS.

3. THE PAYMENT FACTOR FOR POSTS IS THE NUMBER OF POSTS PROVIDED PER INSTALLATION.

AFFIX SEAL: BRIAN C. DANKERT, P.E.
ON: 22-JUN-2021 14:13

ALTERED BY:
ON:

STATE OF NEW YORK · BRIAN C. DANKERT · No. 092443 · LICENSED PROFESSIONAL ENGINEER

AS-BUILT REVISIONS
DESCRIPTION OF ALTERATIONS:

NY 78, TRANSIT ROAD, S.H. 1334A-1
FRENCH ROAD TO WEHRLE DRIVE
TOWNS OF CHEEKTOWAGA & LANCASTER
VILLAGE OF DEPEW
COUNTY: ERIE REGION: 05

PIN 5813.61
NY 78
UTILITY QUALITY LEVEL D

BRIDGES

CULVERTS

ALL DIMENSIONS IN ft UNLESS OTHERWISE NOTED

SIGN DATA SHEET 6

CONTRACT NUMBER D264571

DRAWING NO. SDS-6
SHEET NO. 160

IT IS A VIOLATION OF LAW FOR ANY PERSON, UNLESS THEY ARE ACTING UNDER THE DIRECTION OF A LICENSED PROFESSIONAL ENGINEER, ARCHITECT, LANDSCAPE ARCHITECT, OR LAND SURVEYOR, TO ALTER AN ITEM IN ANY WAY. IF AN ITEM BEARING THE STAMP OF A LICENSED PROFESSIONAL IS ALTERED, THE ALTERING ENGINEER, ARCHITECT, LANDSCAPE ARCHITECT, OR LAND SURVEYOR SHALL STAMP THE DOCUMENT AND INCLUDE THE NOTATION "ALTERED BY" FOLLOWED BY THEIR SIGNATURE, THE DATE OF SUCH ALTERATION, AND A SPECIFIC DESCRIPTION OF THE ALTERATION.

NEW YORK STATE OF OPPORTUNITY. Department of Transportation

PROJECT MANAGER S. S. VAIDYA
CHECK BRIAN C. DANKERT
DRAFTING KEITH A. GORECKI
CHECK BRIAN C. DANKERT
DESIGN KEITH A. GORECKI
JOB MANAGER R. F. SCHALLER
DESIGN SUPERVISOR S. S. VAIDYA

FILE NAME = 581361_CPH_SP_SDS_6.dgn
DATE/TIME = 22-JUN-2021 14:13
USER = kgorecki

QUANTITY AND ITEM LIST			
TOTAL SIGN QUANTITIES			
ITEM NO.	DESCRIPTION	UNIT	QTY
645.5101	GROUND-MOUNTED SIGN PANELS WITHOUT Z-BARS	SF	32.8
645.5102	GROUND-MOUNTED SIGN PANELS LESS THAN 30SF WITH Z-BARS	SF	1793.6
645.81	TYPE A SIGN POST	EA	231
645.8106	HIGH CAPACITY TYPE A SIGN POSTS	EA	18
645.81090003	RETROREFLECTIVE SIGN POST STRIP	EA	52
647.61	REMOVE AND DISPOSE GROUND MOUNTED TYPE A SIGN SUPPORTS, FOUNDATIONS AND SIGNS	EA	177
680.8203	OVHERHEAD SIGN ASSEMBLY, TYPE C	EA	15

QUANTITY AND ITEM LIST			
POLE AND FOUNDATION QUANTITIES FOR OVERHEAD LANE DESIGNATION SIGNS NEAR SIGNAL #50			
ITEM NO.	DESCRIPTION	UNIT	QTY
680.5001	POLE EXCAVATION AND CONCRETE FOUNDATION	CY	4.7
680.62205910	SIGNAL POLE-MAST ARM 20' MTD HEIGHT, 59' ARM, FATIGUE DESIGN	EA	1
680.62206310	SIGNAL POLE-MAST ARM 20' MTD HEIGHT, 63' ARM, FATIGUE DESIGN	EA	1

REFERENCE MARKERS

LEGEND	LEGEND
78 5302 1217 TO 78 5302 1244 (INCLUSIVE)	33 5301 2052 TO 33 5301 2056 (INCLUSIVE)

INSTALLED NB AND SB

ITEM 646.21 - REFERENCE MARKER PANEL	46 EA.
ITEM 646.32 - STEEL POST 2 LB/FT	46 EA.
ITEM 647.83001002 - REMOVAL AND DISPOSAL OF DELINEATORS AND OR REFERENCE MARKERS WITH OR WITHOUT POSTS	46 EA.

AFFIX SEAL: BRIAN C. DANKERT, P.E.
ON: 22-JUN-2021 14:14

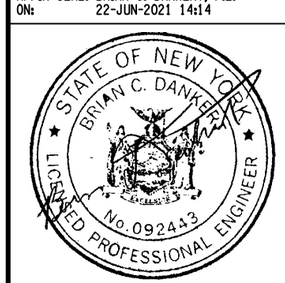

ALTERED BY:
ON:

AS-BUILT REVISIONS
DESCRIPTION OF ALTERATIONS:

NY 78, TRANSIT ROAD, S.H. 1334A-1
FRENCH ROAD TO WEHRLE DRIVE
TOWNS OF CHEEKTOWAGA & LANCASTER
VILLAGE OF DEPEW
COUNTY: ERIE REGION: 05

PIN 5813.61
NY 78
UTILITY QUALITY LEVEL D

BRIDGES

CULVERTS

ALL DIMENSIONS IN ft UNLESS OTHERWISE NOTED

SIGN DATA SHEET 7

CONTRACT NUMBER D264571

DRAWING NO. SDS-7
SHEET NO. 161

IT IS A VIOLATION OF LAW FOR ANY PERSON, UNLESS THEY ARE ACTING UNDER THE DIRECTION OF A LICENSED PROFESSIONAL ENGINEER, ARCHITECT, LANDSCAPE ARCHITECT, OR LAND SURVEYOR, TO ALTER AN ITEM IN ANY WAY. IF AN ITEM BEARING THE STAMP OF A LICENSED PROFESSIONAL IS ALTERED, THE ALTERING ENGINEER, ARCHITECT, LANDSCAPE ARCHITECT, OR LAND SURVEYOR SHALL STAMP THE DOCUMENT AND INCLUDE THE NOTATION "ALTERED BY" FOLLOWED BY THEIR SIGNATURE, THE DATE OF SUCH ALTERATION, AND A SPECIFIC DESCRIPTION OF THE ALTERATION.

NEW YORK STATE OF OPPORTUNITY. Department of Transportation

DESIGN SUPERVISOR S. S. VAIDYA JOB MANAGER R. F. SCHALLER DESIGN KEITH A. GORECKI CHECK BRIAN C. DANKERT DRAFTING KEITH A. GORECKI CHECK BRIAN C. DANKERT PROJECT MANAGER S. S. VAIDYA
FILE NAME = 581361_CPH_SP_SDS_7.dgn
DATE/TIME = 22-JUN-2021 14:14
USER = kgorecki

REGION 5 ADDENDUM TO 680 SERIES STANDARD SHEETS

ALTERNATE POLE FOUNDATION DETAIL TO BE USED WHEN BEDROCK IS ENCOUNTERED

1) CONTACT THE REGIONAL GEOTECH ENGR. PRIOR TO USING THIS DETAIL.
2) IF DIMENSION "C" IS LESS THAN 12", THE ALTERNATE METHOD SHALL NOT BE USED AND THE BEDROCK MUST BE EXCAVATED TO THE FULL DEPTH OF THE ANCHOR BOLT PLUS 4". THE BOLTS SHALL THEN BE PLACED AND THE ENTIRE EXCAVATION BACKFILLED WITH CLASS A CONCRETE AND THE REQUIRED STEEL REINFORCMENT. DIMENSION C SHALL BE EQUAL TO THE REMAINING LENGTH OF ANCHOR BOLT OR 24 TIMES THE BOLT DIAMETER, WHICHEVER IS LESS.
3) FILL THE DRILL HOLES 2/3 FULL WITH GROUT, INSERT THE ANCHOR BOLT TO THE CORRECT ELEVATION USING LIGHT TAPS WITH A HAMMER TO ENSURE THAT NO AIR VOIDS EXIST, AND FILL THE REMAINING DRILL HOLE VOID, IF ANY, WITH GROUT.
4) IF WATER IS ENCOUNTERED IN THE DRILL HOLES AND CANNOT BE REMOVED, THE HOLES SHALL BE DRILLED AT LEAST 6" BEYOND THE BOTTOM OF THE ANCHOR BOLT.
5) THE SURFACE OF ANCHOR BOLTS SHALL BE CLEANED AND PREPARED IN ACCORDANCE WITH THE GROUT MANUFACTURER'S RECOMMENDATIONS.
6) REINFORCING STEEL & DIAMETER OF FOUNDATION FOR DEPTH "A" SHALL CONFORM TO THE DETAILS SPECIFIED FOR THE CORRESPONDING DEPTH SHOWN ON STD. SHT. 680-01 FOR THE NON-ROCK CONDITION.

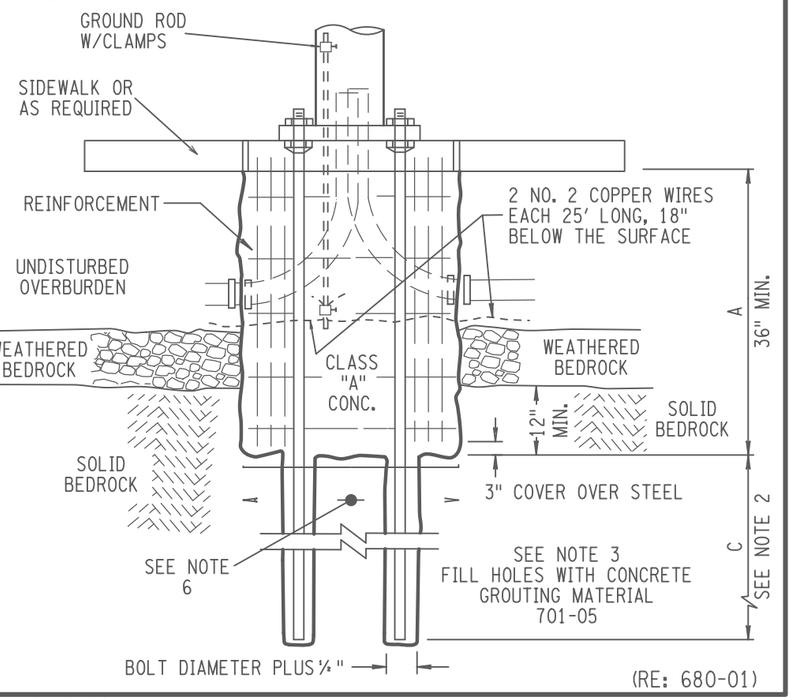

10-20-09 ALL DIMENSIONS IN INCHES UNLESS OTHERWISE NOTED

ITEM 206.03060005	CONDUIT EXCAV. & BACKFILL (NOT IN EXISTING ROADWAY)	LF
ITEM 680.53080305	CONDUIT, FLEXIBLE, LIQUID TIGHT, NON-METALIC, 1"	LF
ITEM 680.54	INDUCTANCE LOOP INSTALLATION	LF
ITEM 680.72	INDUCTANCE LOOP WIRE	LF

INDUCTANCE LOOPS

TYPICAL LAYOUT

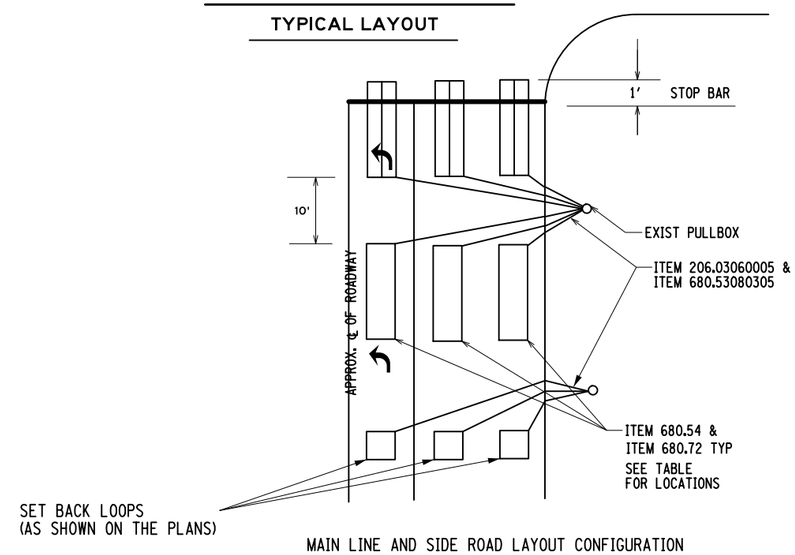

MAIN LINE AND SIDE ROAD LAYOUT CONFIGURATION

NOTES:

1. THE CONTRACTOR SHALL BE AWARE THAT SIGNAL LOOPS ARE DUE TO BE INSTALLED UNDER THIS CONTRACT AT VARIOUS LOCATIONS AS SHOWN IN THE DETECTOR DATA TABLE. THEY SHALL BE INSTALLED AFTER THE MILLING OPERATION IS COMPLETED IN THOSE AREAS AND BEFORE THE TOP COURSE HAS BEEN PLACED. THE CONTRACTOR SHALL NOTIFY THE ENGINEER-IN-CHARGE (EIC) IN WRITING SEVEN (7) DAYS PRIOR TO THE BEGINNING OF ANY MILLING OPERATIONS AT SIGNALIZED INTERSECTIONS. THE EIC SHALL THEN CONTACT THE NYSDOT SIGNAL MAINTENANCE UNIT OF THIS NOTIFICATION SO THAT ANY NECESSARY ADJUSTMENTS TO THE SIGNAL OPERATION CAN BE MADE PRIOR TO ANY MILLING IN THE LOOP AREAS. THE CONTACT FOR NYSDOT SIGNAL MAINTENANCE IS MIKE BARRETT OR NEIL FRIEDMAN AT 716-649-1426. THE CONTRACTOR SHALL NOT INSTALL ANY PORTION OF ANY DETECTION LOOP UNLESS A MEMBER OF THE NYSDOT SIGNAL MAINTENANCE UNIT IS PRESENT (AT THE SITE OF INSTALLATION) OR HAS RECEIVED PERMISSION TO INSTALL THE DETECTION LOOPS WITHOUT THEIR PRESENCE.
2. EXISTING CAST ALUMINUM JUNCTION BOXES SHALL BE REMOVED. COST OF THE WORK TO BE INCLUDED IN ITEM 680.54.
3. ANY EXISTING ELEMENT OF THE SIGNAL SYSTEM THAT IS TO REMAIN AND IS DAMAGED BY THE CONTRACTORS OPERATIONS, SHALL BE REPAIRED/REPLACED TO THE SATISFACTION OF THE ENGINEER AT NO ADDITIONAL COST TO THE STATE.
4. DURING LOOP REPLACEMENT IT IS THE INTENT TO UTILIZE THE EXISTING FLEXIBLE CONDUIT (ITEM 680.53080305) WHENEVER POSSIBLE, FOR CONNECTING THE NEW LOOP WIRE TO THE EXISTING PULLBOX. ITEMS 206.03060005 & 680.53080305 ARE ADDED TO THIS CONTRACT IF IT BECOMES APPARENT THAT THE EXISTING FACILITIES CANNOT BE REUSED AND NEW ONES ARE REQUIRED.
5. IF EXCAVATION ACROSS AN EXISTING SIDEWALK IS REQUIRED, THE CONTRACTOR SHALL REPLACE THE ENTIRE AFFECTED BLOCK OF SIDEWALK AND NOT JUST THE WIDTH OF THE TRENCH. THE COST FOR SIDEWALK REPLACEMENT SHALL BE PAID UNDER SEPARATE ITEM 608.01010002.
6. THE CONTRACTOR SHALL SPLICE THE NEW INDUCTANCE LOOP WIRES, THAT REPLACED THE EXISTING LOOP WIRE, TO THE EXISTING SHIELDED LEAD-IN CABLE AT THE CURB SIDE PULLBOX. THE COST SHALL BE INCLUDED IN ITEM 680.72
7. THE FRONT LOOP DETECTORS, KNOWN AS QUADRUPOLES, SHALL BE 6' X 20' HAVING 2-4-2 TURNS OF WIRE AS DETAILED ON STANDARD SHEET 680-14. ALL OTHER LOOP DETECTORS, WITH EXCEPTION OF SETBACK LOOPS, SHALL BE 6' X 20' HAVING THREE (3) TURNS OF WIRE. SET BACK LOOPS SHALL BE 6' X 6' HAVING FOUR (4) TURNS.
8. UPON COMPLETION OF MILLING OPERATIONS IN AREAS WITH DAMAGED LOOP DETECTORS, THE CONTRACTOR WILL BE ALLOTTED THREE (3) WORKING DAYS FOR REPLACEMENT OF THE LOOP DETECTORS. THE LOOPS SHALL BE PLACED IN THE MILLED SURFACE AND SEALED WITH LOOP EMBEDDING SEALER, AS SHOWN ON STANDARD SHEET 680-14. IF THE LOOPS ARE DAMAGED PRIOR TO THE PLACEMENTOF THE TOP COURSE, THE CONTRACTOR SHALL REPLACE THE LOOPS AT NO COST TO THE STATE.

AFFIX SEAL: BRIAN C. DANKERT, P.E.
ON: 22-JUN-2021 14:14

ALTERED BY:
ON:

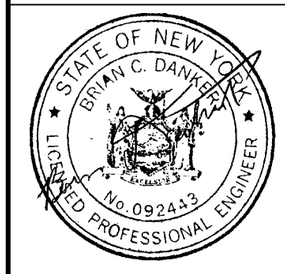

AS-BUILT REVISIONS
DESCRIPTION OF ALTERATIONS:

NY 78, TRANSIT ROAD, S.H. 1334A-1
FRENCH ROAD TO WEHRLE DRIVE
TOWNS OF CHEEKTOWAGA & LANCASTER
VILLAGE OF DEPEW
COUNTY: ERIE REGION: 05

PIN 5813.61
NY 78
UTILITY QUALITY LEVEL D

BRIDGES

CULVERTS

ALL DIMENSIONS IN ft UNLESS OTHERWISE NOTED

TRAFFIC SIGNAL DETAILS

CONTRACT NUMBER D264571

DRAWING NO. TSD-1
SHEET NO. 162

IT IS A VIOLATION OF LAW FOR ANY PERSON, UNLESS THEY ARE ACTING UNDER THE DIRECTION OF A LICENSED PROFESSIONAL ENGINEER, ARCHITECT, LANDSCAPE ARCHITECT, OR LAND SURVEYOR, TO ALTER AN ITEM IN ANY WAY. IF AN ITEM BEARING THE STAMP OF A LICENSED PROFESSIONAL IS ALTERED, THE ALTERING ENGINEER, ARCHITECT, LANDSCAPE ARCHITECT, OR LAND SURVEYOR SHALL STAMP THE DOCUMENT AND INCLUDE THE NOTATION "ALTERED BY" FOLLOWED BY THEIR SIGNATURE, THE DATE OF SUCH ALTERATION, AND A SPECIFIC DESCRIPTION OF THE ALTERATION.

NEW YORK STATE OF OPPORTUNITY. Department of Transportation

DESIGN SUPERVISOR S. S. VAIDYA JOB MANAGER R. F. SCHALLER DESIGN KEITH A. GORECKI CHECK BRIAN C. DANKERT DRAFTING KEITH A. GORECKI CHECK BRIAN C. DANKERT PROJECT MANAGER S. S. VAIDYA

FILE NAME = 581361_CPH_TSD_1.dgn
DATE/TIME = 22-JUN-2021 14:14
USER = kgorecki

NYSDOT TRAFFIC SIGNAL #143 (ERIE)
NY ROUTE 78 (TRANSIT ROAD) AT WEHRLE DRIVE

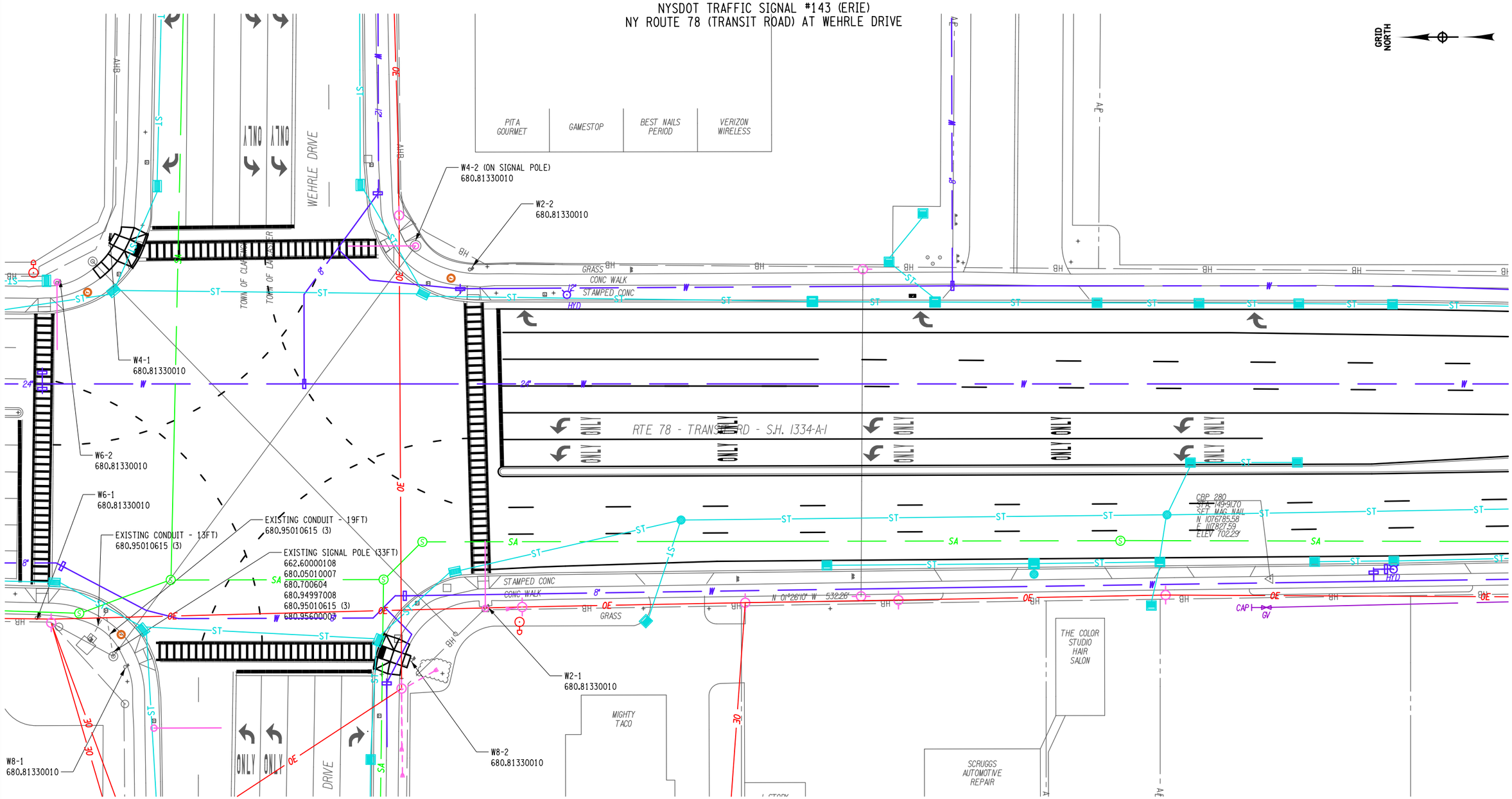

PROJECT MANAGER S. S. VAIDYA
CHECK BRIAN C. DANKERT
DRAFTING KEITH A. GORECKI
CHECK BRIAN C. DANKERT
DESIGN KEITH A. GORECKI
JOB MANAGER R. F. SCHALLER
DESIGN SUPERVISOR S. S. VAIDYA

FILE NAME = 581361_CPH_TSP_LOC01_1.dgn
DATE/TIME = 22-JUN-2021 14:14
USER = kgorecki

AFFIX SEAL: BRIAN C. DANKERT, P.E.
ON: 22-JUN-2021 14:14

ALTERED BY:
ON:

STATE OF NEW YORK · BRIAN C. DANKERT · No. 092413 · LICENSED PROFESSIONAL ENGINEER

AS-BUILT REVISIONS
DESCRIPTION OF ALTERATIONS:

NY 78, TRANSIT ROAD, S.H. 1334A-1
FRENCH ROAD TO WEHRLE DRIVE
TOWNS OF CHEEKTOWAGA & LANCASTER
VILLAGE OF DEPEW
COUNTY: ERIE REGION: 05

PIN 5813.61
NY 78
UTILITY QUALITY LEVEL D

BRIDGES

CULVERTS

ALL DIMENSIONS IN ft UNLESS OTHERWISE NOTED

TRAFFIC SIGNAL #143 (ERIE) PLAN

CONTRACT NUMBER
D264571

DRAWING NO. TSP-1
SHEET NO. 163

IT IS A VIOLATION OF LAW FOR ANY PERSON, UNLESS THEY ARE ACTING UNDER THE DIRECTION OF A LICENSED PROFESSIONAL ENGINEER, ARCHITECT, LANDSCAPE ARCHITECT, OR LAND SURVEYOR, TO ALTER AN ITEM IN ANY WAY. IF AN ITEM BEARING THE STAMP OF A LICENSED PROFESSIONAL IS ALTERED, THE ALTERING ENGINEER, ARCHITECT, LANDSCAPE ARCHITECT, OR LAND SURVEYOR SHALL STAMP THE DOCUMENT AND INCLUDE THE NOTATION "ALTERED BY" FOLLOWED BY THEIR SIGNATURE, THE DATE OF SUCH ALTERATION, AND A SPECIFIC DESCRIPTION OF THE ALTERATION.

NEW YORK STATE OF OPPORTUNITY. Department of Transportation

NYSDOT TRAFFIC SIGNAL #143 (ERIE)
NY ROUTE 78 (TRANSIT ROAD) AT WEHRLE DRIVE

581361 - NY 78 (TRANSIT RD); FRENCH RD to ELLICOTT CREEK

05-53-143

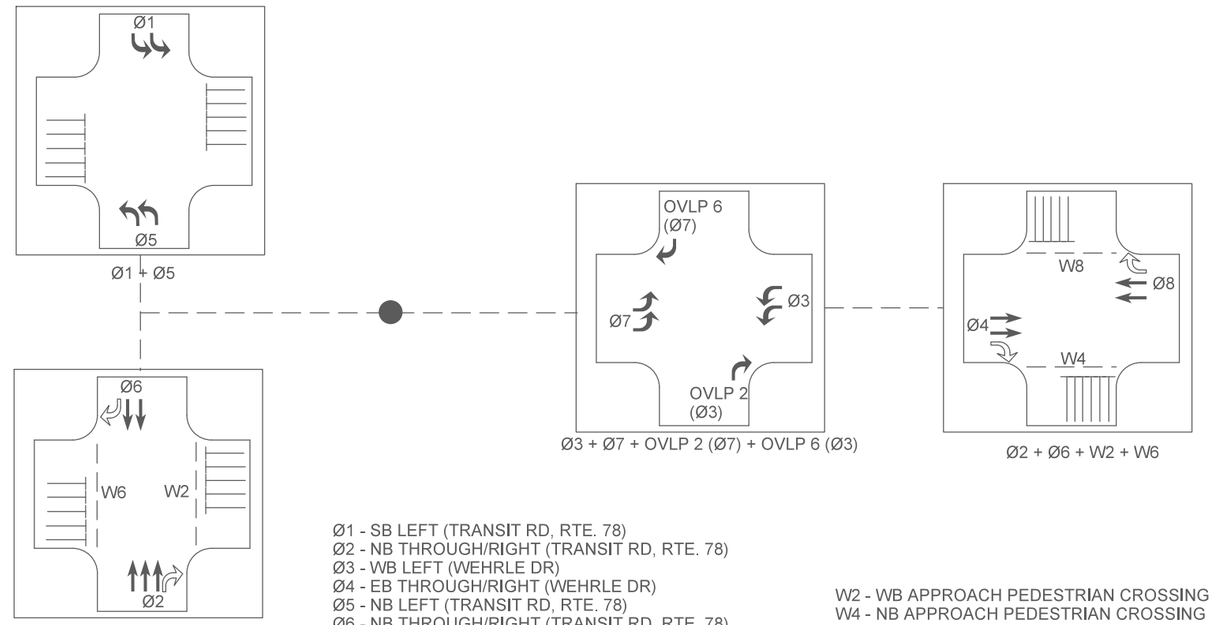

Ø1 - SB LEFT (TRANSIT RD, RTE. 78)
Ø2 - NB THROUGH/RIGHT (TRANSIT RD, RTE. 78)
Ø3 - WB LEFT (WEHRLE DR)
Ø4 - EB THROUGH/RIGHT (WEHRLE DR)
Ø5 - NB LEFT (TRANSIT RD, RTE. 78)
Ø6 - NB THROUGH/RIGHT (TRANSIT RD, RTE. 78)
Ø7 - EB LEFT (WEHRLE DR)
Ø8 -WB THROUGH/RIGHT (WEHRLE DR)

OVLP 2 (Ø7) - NB RIGHT (TRANSIT RD, RTE. 78)
OVLP 6 (Ø3) - SB RIGHT (TRANSIT RD, RTE. 78)

W2 - WB APPROACH PEDESTRIAN CROSSING
W4 - NB APPROACH PEDESTRIAN CROSSING
W6 - EB APPROACH PEDESTRIAN CROSSING
W8 - SB APPROACH PEDESTRIAN CROSSING

2/3/2020

QUANTITY AND ITEM LIST

SIGNAL #143 (ERIE) - NY ROUTE 78 (TRANSIT ROAD) AT WEHRLE DRIVE

ITEM NO.	DESCRIPTION	UNIT	QTY
619.1611	MAINTAIN TRAFFIC SIGNAL EQUIPMENT (REQ A)	MO	8
662.60000108	FURNISHING ELECTRICAL SERVICE	DC	1
680.05010007	360 DEGREE CAMERA VIDEO DETECTION SYSTEM	EA	1
680.700603	RISER ASSEMBLY, 1" DIA.	EA	1
680.77000105	MODIFY TRAFFIC SIGNAL INSTALLATION, LOCATION 1	EA	1
680.79000105	REMOVE TRAFFIC SIGNAL INSTALLATION, LOCATION 1	EA	1
680.81330010	AUDIBLE PEDESTRIAN SIGNAL	EA	8
680.94997008	F AND I ELECTRICAL DISCONNECT GEN. TRAN SWITCH	EA	1
680.95010615	SERVICE CABLE, 1 CONDUCTOR, 6 AWG	FT	195
680.95600004	ELECTRICAL METER PAN	EA	1

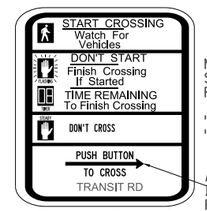

R10-3i

NEW PEDESTRIAN SIGNS SHALL BE SIGN NUMBER R10-3i FROM THE MUTCD.

"TRANSIT RD" FOR W2-1, W2-2, W6-1 & W6-2
"WEHRLE DR" FOR W4-1, W4-2, W8-1, & W8-2

ARROW MAY FACE LEFT OR RIGHT, IT IS CONTRACTORS RESPONSIBILITY FOR PROPER ARROW ORIENTATION.

AUDIBLE WIRING NOTE:

THE COST TO FURNISH AND INSTALL WIRING BETWEEN THE AUDIBLE PEDESTRIAN SIGNAL (APS) UNITS AND THEIR RESPECTIVE CONTROL UNITS MOUNTED IN THE PED. HEADS SHALL BE INCLUDED UNDER PROVISIONS OF ITEM 680.81330010.

THE MANUFACTURER'S SUGGESTED CABLES FOR USE WITH AUDIBLE PEDESTRIAN SIGNAL UNITS ARE BELDEN 8489 FOR ABOVE GROUND.

BELDEN 8489, OR EQUIVALENT, SHALL BE USED WITH 680.81330010.

REFER TO "EZCOMMUNICATOR 4 WIRE NAVIGATOR APS SYSTEM INSTALLATION MANUAL" FOR MANUFACTURER'S INSTALLATION DETAILS AND PROCEDURES.

TRAFFIC SIGNAL #134 (ERIE)			
POWER SUPPLIER:			
EXISTING METER #:		NEW METER #:	
EXISTING ACCOUNT #:		NEW ACCOUNT #	
BILLING TO:			

1.) EXISTING PULLBOX LOCATIONS ON PLANS ARE SHOWN BASED ON RECORD PLANS. ACTUAL FIELD LOCATIONS MAY VARY.

2.) ITEM 680.77000105, "MODIFY TRAFFIC SIGNAL INSTALLATION, LOCATION 1" SHALL INCLUDE THE REQUIRED MODIFICATIONS TO THE EXISTING WIRING WITHIN THE SIGNAL CABINETS TO MATCH THE PROPOSED INPUT WIRING AND SWITCHPACKS FOUND IN THE PLANS.

3.) ITEM 680.79000105, "REMOVE TRAFFIC SIGNAL INSTALLATION, LOCATION 1" SHALL INCLUDE THE REMOVAL OF THE EXISTING TRAFFIC SIGNAL EQUIPMENT LISTED BELOW. ALL EQUIPMENT LISTED SHALL BE DISPOSED OF AND ONLY LED SERIAL NUMBERS SHALL BE RECORDED AND GIVEN TO NYSDOT TRAFFIC SIGNAL MAINTENANCE CREW.

- EXISTING RISER ASSEMBLY
- EXISTING DISCONNECT
- EXISTING ELECTRICAL SERVICE
- EXISITNG METER PAN
- EXISTING PEDESTRIAN PUSH BUTTONS

AFFIX SEAL: BRIAN C. DANKERT, P.E.
ON: 22-JUN-2021 14:14

ALTERED BY:
ON:

AS-BUILT REVISIONS
DESCRIPTION OF ALTERATIONS:

NY 78, TRANSIT ROAD, S.H. 1334A-1
FRENCH ROAD TO WEHRLE DRIVE
TOWNS OF CHEEKTOWAGA & LANCASTER
VILLAGE OF DEPEW
COUNTY: ERIE REGION: 05

PIN 5813.61
NY 78
UTILITY QUALITY LEVEL D

BRIDGES

CULVERTS

ALL DIMENSIONS IN ft UNLESS OTHERWISE NOTED

TRAFFIC SIGNAL #143 (ERIE) PLAN

CONTRACT NUMBER
D264571

DRAWING NO. TSP-2
SHEET NO. 164

IT IS A VIOLATION OF LAW FOR ANY PERSON, UNLESS THEY ARE ACTING UNDER THE DIRECTION OF A LICENSED PROFESSIONAL ENGINEER, ARCHITECT, LANDSCAPE ARCHITECT, OR LAND SURVEYOR, TO ALTER AN ITEM IN ANY WAY. IF AN ITEM BEARING THE STAMP OF A LICENSED PROFESSIONAL IS ALTERED, THE ALTERING ENGINEER, ARCHITECT, LANDSCAPE ARCHITECT, OR LAND SURVEYOR SHALL STAMP THE DOCUMENT AND INCLUDE THE NOTATION "ALTERED BY" FOLLOWED BY THEIR SIGNATURE, THE DATE OF SUCH ALTERATION, AND A SPECIFIC DESCRIPTION OF THE ALTERATION.

NEW YORK STATE OF OPPORTUNITY. Department of Transportation

DESIGN SUPERVISOR S. S. VAIDYA
JOB MANAGER R. F. SCHALLER
DESIGN KEITH A. GORECKI
CHECK BRIAN C. DANKERT
DRAFTING KEITH A. GORECKI
CHECK BRIAN C. DANKERT
PROJECT MANAGER S. S. VAIDYA

FILE NAME = 581361_CPH_TSP_LOC01_2.dgn
DATE/TIME = 22-JUN-2021 14:14
USER = kgorecki

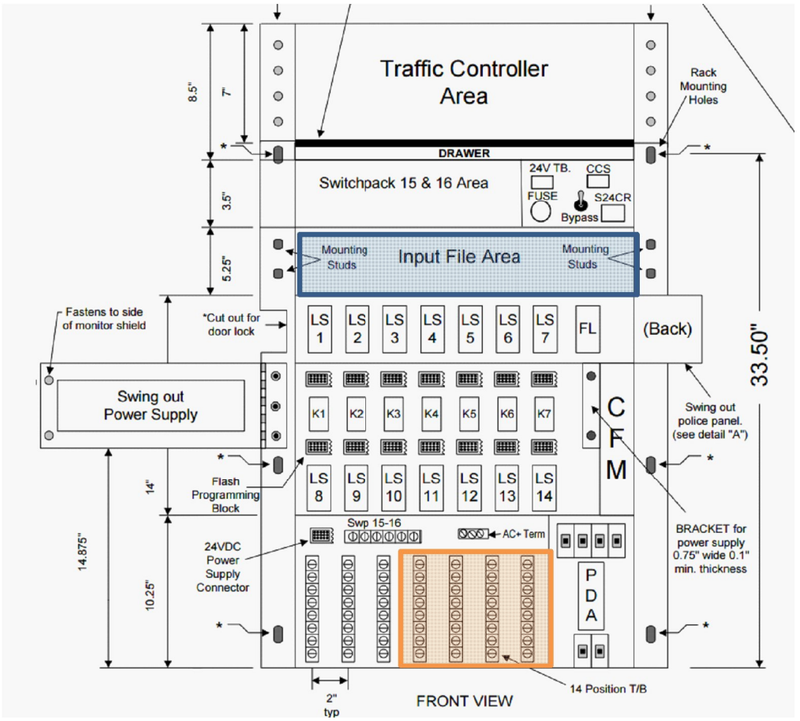

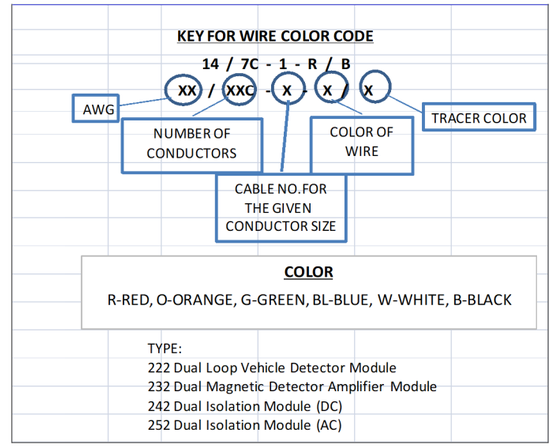

SIGNAL OPERATIONS SPECIFICATIONS — DATE: 6/4/2021

TABLE OF INPUT WIRING

SIGNAL NUMBER	05-53-143	COUNTY	Erie	INTERSECTION	Rt 78 @ Wehrle Dr

INPUT FILE AREA		FUNCTION		DETECTOR LOCATION ID (PER PLAN)				TERMINAL WIRING BOARD				
SLOT	TYPE	(Φ#/PED #)	DESCRIPTION					TERMINAL	WIRE COLOR CODE			
1 - TOP	Video Card	Video Card	360 Degree Camera	Stop Bar Detectors				1A	As Per Supplier			
								1B	As Per Supplier			
1 - BOTTOM		Video Card						2A				
								2B				
2 - TOP								3A				
								3B				
2 - BOTTOM								4A				
								4B				
3 - TOP								5A				
								5B				
3 - BOTTOM								6A				
								6B				
4 - TOP								7A				
								7B				
4 - BOTTOM								8A				
								8B				
5 - TOP								9A				
								9B				
5 - BOTTOM								10A				
								10B				
6 - TOP								11A				
								11B				
6 - BOTTOM								12A				
								12B				
7 - TOP								13A				
								13B				
7 - BOTTOM								14A				
								14B				
8 - TOP								15A				
								15B				
8 - BOTTOM								16A				
								16B				
9 - TOP	222	Φ1	SB T Rt 78 Setback	17A	17B			17A	SLI - 17AB - W			
								17B	SLI - 17AB - B			
9 - BOTTOM		Φ6	SB T Rt 78 Setback	18A	18B	18C	18D	18A	SLI - 18AB - W	SLI - 18CD - W		
								18B	SLI - 18AB - B	SLI - 18CD - B		
10 - TOP	222	Φ1	SB LT Rt 78 Setback	19A	19B			19A	SLI - 19AB - W			
								19B	SLI - 19AB - B			
10 - BOTTOM		Φ6	SB T Rt 78	20A	20B	20C	20D	20A	SLI - 20AB - W	SLI - 20CD - W		
								20B	SLI - 20AB - B	SLI - 20CD - B		
11 - TOP	222	Φ5	NB LT Rt 78	21A	21B			21A	SLI - 21AB - W			
								21B	SLI - 21AB - B			
11 - BOTTOM		Φ2	NB T Rt 78	22A	22B	22C	22D	22A	SLI - 22AB - W	SLI - 22CD - W		
								22B	SLI - 22AB - B	SLI - 22CD - B		
12 - TOP	222	Φ5	NB LT Rt 78	23A	23B			23A	SLI - 23AB - W			
								23B	SLI - 23AB - B			
12 - BOTTOM		Φ2	NB T Rt 78	24A	24B	24C	24D	24A	SLI - 24AB - W	SLI - 24CD - W		
								24B	SLI - 24AB - B	SLI - 24CD - B		
13 - TOP	242	Φ2 Ped	Crossing Wehrle Dr	W2.1	W2.2			25A	14/5C-W2.1-O	14/5C-W2.2-O		
								25B	14/5C-W2.1-B	14/5C-W2.2-B		
13 - BOTTOM		Φ4 Ped	Crossing Rt 78	W4.1	W4.2			26A	14/5C-W4.1-O	14/5C-W4.2-O		
								26B	14/5C-W4.1-B	14/5C-W4.2-B		
14 - TOP	242	Φ6 Ped	Crossing Wehrle Dr	W6.1	W6.2			27A	14/5C-W6.1-O	14/5C-W6.2-O		
								27B	14/5C-W6.1-B	14/5C-W6.2-B		
14 - BOTTOM	242	Φ8 Ped	Crossing Rt 78	W8.1	W8.2			28A	14/5C-W8.1-O	14/5C-W8.2-O		
								28B	14/5C-W8.1-B	14/5C-W8.2-B		

AFFIX SEAL: BRIAN C. DANKERT, P.E.
ON: 22-JUN-2021 14:14

ALTERED BY:
ON:

AS-BUILT REVISIONS
DESCRIPTION OF ALTERATIONS:

NY 78, TRANSIT ROAD, S.H. 1334A-1
FRENCH ROAD TO WEHRLE DRIVE
TOWNS OF CHEEKTOWAGA & LANCASTER
VILLAGE OF DEPEW
COUNTY: ERIE REGION: 05

PIN 5813.61
NY 78
UTILITY QUALITY LEVEL D

BRIDGES

CULVERTS

ALL DIMENSIONS IN ft UNLESS OTHERWISE NOTED

TRAFFIC SIGNAL #143 (ERIE) PLAN

CONTRACT NUMBER D264571

DRAWING NO. TSP-3
SHEET NO. 165

IT IS A VIOLATION OF LAW FOR ANY PERSON, UNLESS THEY ARE ACTING UNDER THE DIRECTION OF A LICENSED PROFESSIONAL ENGINEER, ARCHITECT, LANDSCAPE ARCHITECT, OR LAND SURVEYOR, TO ALTER AN ITEM IN ANY WAY. IF AN ITEM BEARING THE STAMP OF A LICENSED PROFESSIONAL IS ALTERED, THE ALTERING ENGINEER, ARCHITECT, LANDSCAPE ARCHITECT, OR LAND SURVEYOR SHALL STAMP THE DOCUMENT AND INCLUDE THE NOTATION "ALTERED BY" FOLLOWED BY THEIR SIGNATURE, THE DATE OF SUCH ALTERATION, AND A SPECIFIC DESCRIPTION OF THE ALTERATION.

NEW YORK STATE OF OPPORTUNITY. Department of Transportation

DESIGN SUPERVISOR S. S. VAIDYA
JOB MANAGER R. F. SCHALLER
DESIGN KEITH A. GORECKI
CHECK BRIAN C. DANKERT
DRAFTING KEITH A. GORECKI
CHECK BRIAN C. DANKERT
PROJECT MANAGER S. S. VAIDYA
FILE NAME = 581361_CPH_TSP_LOC01_3.dgn
DATE/TIME = 22-JUN-2021 14:14
USER = kgorecki

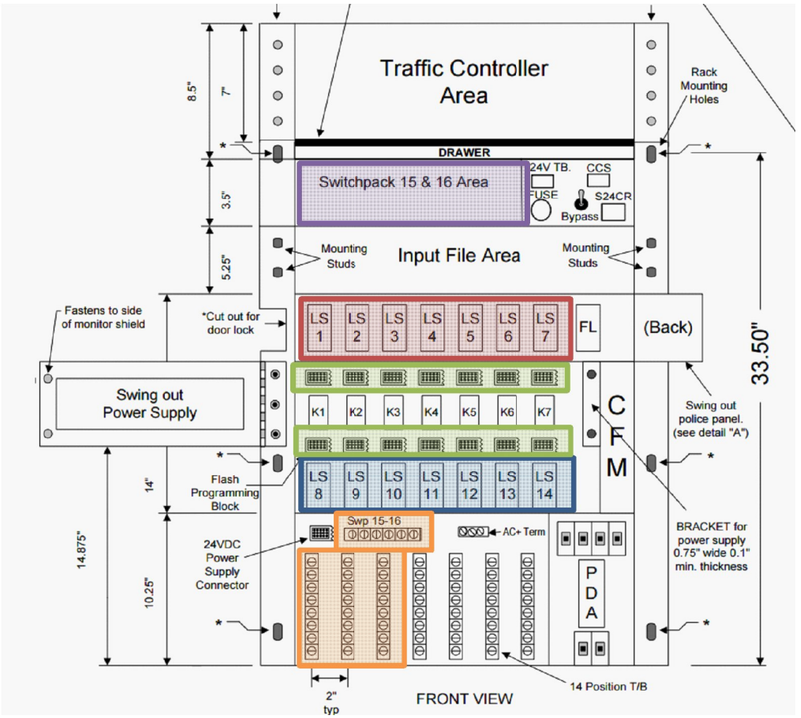

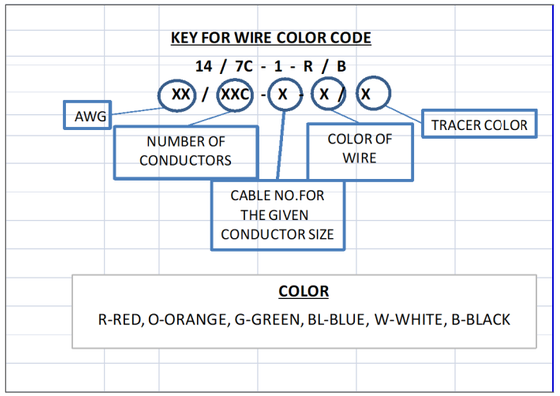

LEGEND

INDICATIONS					
G	= CIRCULAR GREEN	Y	= CIRCULAR YELLOW	R	= CIRCULAR RED
← G	= LEFT GREEN ARROW	← Y	= LEFT YELLOW ARROW	← R	= LEFT RED ARROW
→ G	= RIGHT GREEN ARROW	→ Y	= RIGHT YELLOW ARROW	→ R	= RIGHT RED ARROW
↑ G	= VERT. GREEN ARROW	← FY	= FLASHING YELLOW ARROW	WALK	=HAND/MAN
				DON'T WALK	=FLASHING HAD/COUNT DOWN TIMER
FLASH PLUG					
W	=DARK				
R	=FLASH RED				

SIGNAL OPERATIONS SPECIFICATIONS — DATE: 3/4/2021

TABLE OF SWITCH PACKS

	SIGNAL NUMBER		05-53-143				COUNTY	Erie	INTERSECTION	Rt 78 @ Wehrle Dr		
	SWITCH PACK	FUNCTION (Φ#/OVLP)	FACE NUMBERS				FLASH PLUG	INDICATIONS	TERMINAL WIRING BOARD			
									TERMINAL	WIRE COLOR CODE PER FACE			
TOP ROW (LS1-LS7)	SP 1	Φ1	1	2			R	← R	SP 1R	14/5C-1-R	14/5C-2-R		
								← Y	SP 1Y	14/5C-1-Y	14/5C-2-Y		
								← G	SP 1G	14/5C-1-G	14/5C-2-G		
								GND. BAR	GND. BUS	14/5C-1-W	14/5C-2-W		
	SP 2	Φ2	8	9	10		R	R	SP 2R	14/5C-8-R	14/5C-9-R	14/5C-10-R	
								Y	SP 2Y	14/5C-8-Y	14/5C-9-Y	14/5C-10-Y	
								G	SP 2G	14/5C-8-G	14/5C-9-G	14/5C-10-G	
								GND. WIRE	GND. BUS	14/5C-8-W	14/5C-9-W	14/5C-10-W	
	SP 3	Φ3	11	12			R	← R	SP 3R	14/5C-11-R	14/5C-12-R		
								← Y	SP 3Y	14/5C-11-Y	14/5C-12-Y		
								← G	SP 3G	14/5C-11-G	14/5C-12-G		
								GND. WIRE	GND. BUS	14/5C-11-W	14/5C-12-W		
	SP 4	Φ4	17	18			R	R	SP 4R	14/5C-17-R	14/5C-18-R		
								Y	SP 4Y	14/5C-17-Y	14/5C-18-Y		
								G	SP 4G	14/5C-17-G	14/5C-18-G		
								GND. WIRE	GND. BUS	14/5C-17-W	14/5C-18-W		
	SP 5	Φ5	6	7			R	← R	SP 5R	14/5C-6-R	14/5C-7-R		
								← Y	SP 5Y	14/5C-6-Y	14/5C-7-Y		
								← G	SP 5G	14/5C-6-G	14/5C-7-G		
								GND. WIRE	GND. BUS	14/5C-6-W	14/5C-7-W		
	SP 6	Φ6	3	4	5		R	R	SP 6R	14/5C-3-R	14/5C-4-R	14/5C-5-R	
								Y	SP 6Y	14/5C-3-Y	14/5C-4-Y	14/5C-5-Y	
								G	SP 6G	14/5C-3-G	14/5C-4-G	14/5C-5-G	
								GND. WIRE	GND. BUS	14/5C-3-W	14/5C-4-W	14/5C-5-W	
	SP 7	Φ7	15	16			R	← R	SP 7R	14/5C-15-R	14/5C-16-R		
								← Y	SP 7Y	14/5C-15-Y	14/5C-16-Y		
								← G	SP 7G	14/5C-15-G	14/5C-16-G		
								GND. WIRE	GND. BUS	14/5C-15-W	14/5C-16-W		
BOTTOM ROW (LS8-LS14)	SP 8	Φ8	13	14			R	R	SP 8R	14/5C-13-R	14/5C-14-R		
								Y	SP 8Y	14/5C-13-Y	14/5C-14-Y		
								G	SP 8G	14/5C-13-G	14/5C-14-G		
								GND. WIRE	GND. BUS	14/5C-13-W	14/5C-14-W		
	SP 9								SP 9R				
									SP 9Y				
									SP 9G				
								GND. WIRE	GND. BUS				
	SP 10								SP 10R				
									SP 10Y				
									SP 10G				
								GND. WIRE	GND. BUS				
	SP 11	Φ2 Ped	W2.1	W2.2			W	DON'T WALK	SP 11R	14/5C-W2.1-R	14/5C-W2.2-R		
									SP 11Y				
								WALK	SP 11G	14/5C-W2.1-G	14/5C-W2.2-G		
								GND. WIRE	GND. BUS	14/5C-W2.1-W	14/5C-W2.2-W		
	SP 12	Φ4 Ped	W4.1	W4.2			W	DON'T WALK	SP 12R	14/5C-W4.1-R	14/5C-W4.2-R		
									SP 12Y				
								WALK	SP 12G	14/5C-W4.1-G	14/5C-W4.2-G		
								GND. WIRE	GND. BUS	14/5C-W4.1-W	14/5C-W4.2-W		
	SP 13	Φ6 Ped	W6.1	W6.2			W	DON'T WALK	SP 13R	14/5C-W6.1-R	14/5C-W6.2-R		
									SP 13Y				
								WALK	SP 13G	14/5C-W6.1-G	14/5C-W6.2-G		
								GND. WIRE	GND. BUS	14/5C-W6.1-W	14/5C-W6.2-W		
	SP 14	Φ8 Ped	W8.1	W9.2			W	DON'T WALK	SP 14R	14/5C-W8.1-R	14/5C-W9.2-R		
									SP 14Y				
								WALK	SP 14G	14/5C-W8.1-G	14/5C-W9.2-G		
								GND. WIRE	GND. BUS	14/5C-W8.1-W	14/5C-W9.2-W		
SPECIAL	SP 15								SP 15R				
									SP 15Y				
									SP 15G				
								GND. WIRE	GND. BUS				
	SP 16								SP 16R				
									SP 16Y				
									SP 16G				
								GND. WIRE	GND. BUS				

AFFIX SEAL: BRIAN C. DANKERT, P.E.
ON: 22-JUN-2021 14:14

ALTERED BY:
ON:

STATE OF NEW YORK — BRIAN C. DANKERT — No. 092443 — LICENSED PROFESSIONAL ENGINEER

AS-BUILT REVISIONS
DESCRIPTION OF ALTERATIONS:

NY 78, TRANSIT ROAD, S.H. 1334A-1
FRENCH ROAD TO WEHRLE DRIVE
TOWNS OF CHEEKTOWAGA & LANCASTER
VILLAGE OF DEPEW
COUNTY: ERIE — REGION: 05

PIN 5813.61
NY 78
UTILITY QUALITY LEVEL D

BRIDGES

CULVERTS

ALL DIMENSIONS IN ft UNLESS OTHERWISE NOTED

TRAFFIC SIGNAL #143 (ERIE) PLAN

CONTRACT NUMBER D264571

DRAWING NO. TSP-4
SHEET NO. 166

IT IS A VIOLATION OF LAW FOR ANY PERSON, UNLESS THEY ARE ACTING UNDER THE DIRECTION OF A LICENSED PROFESSIONAL ENGINEER, ARCHITECT, LANDSCAPE ARCHITECT, OR LAND SURVEYOR, TO ALTER AN ITEM IN ANY WAY. IF AN ITEM BEARING THE STAMP OF A LICENSED PROFESSIONAL IS ALTERED, THE ALTERING ENGINEER, ARCHITECT, LANDSCAPE ARCHITECT, OR LAND SURVEYOR SHALL STAMP THE DOCUMENT AND INCLUDE THE NOTATION "ALTERED BY" FOLLOWED BY THEIR SIGNATURE, THE DATE OF SUCH ALTERATION, AND A SPECIFIC DESCRIPTION OF THE ALTERATION.

NEW YORK STATE OF OPPORTUNITY. Department of Transportation

DESIGN SUPERVISOR S. S. VAIDYA — JOB MANAGER R. F. SCHALLER — DESIGN KEITH A. GORECKI — CHECK BRIAN C. DANKERT — DRAFTING KEITH A. GORECKI — CHECK BRIAN C. DANKERT — PROJECT MANAGER S. S. VAIDYA
FILE NAME = 581361_CPH_TSP_L0C01_4.dgn
DATE/TIME = 22-JUN-2021 14:14
USER = kgorecki

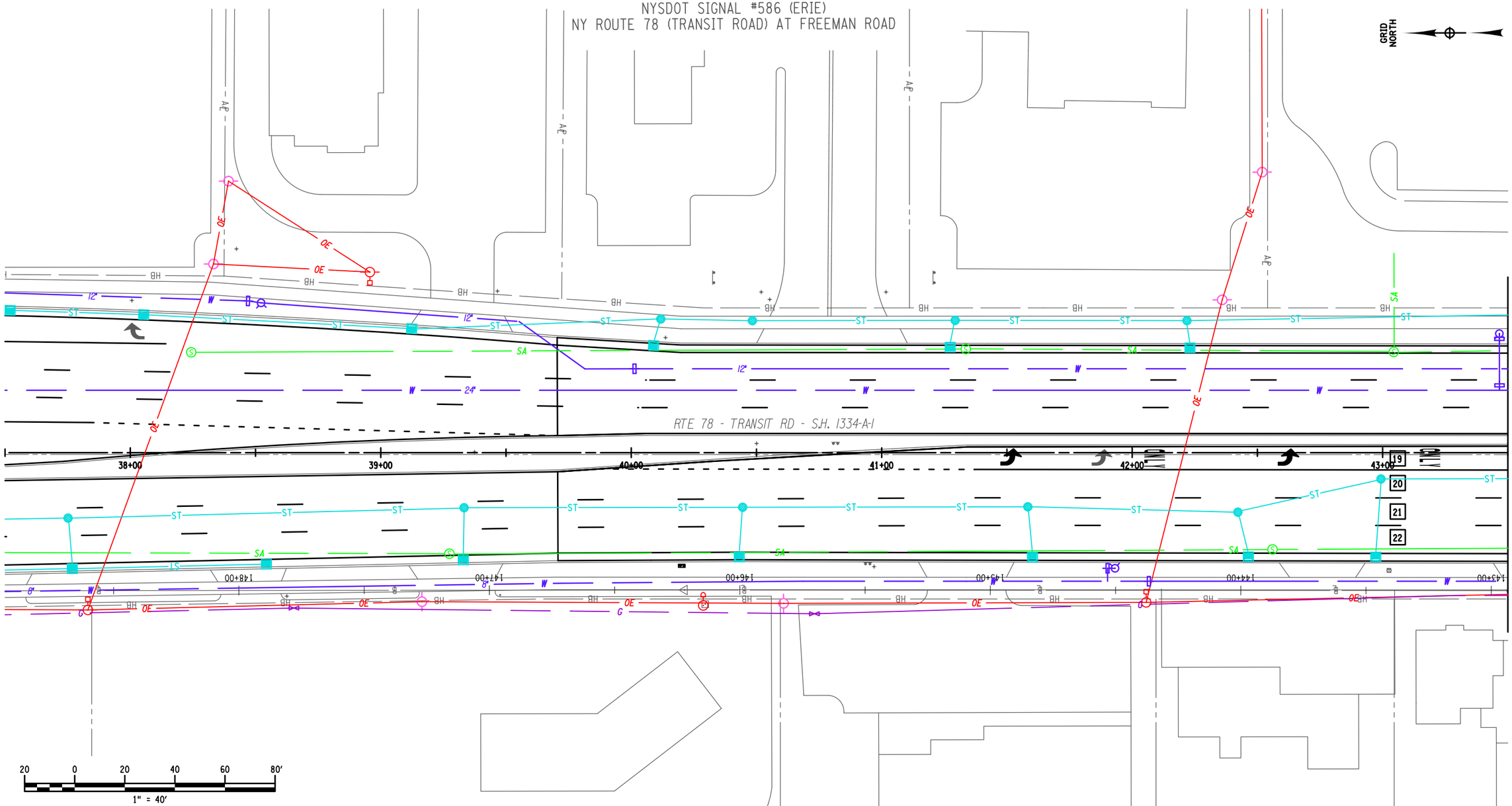

AFFIX SEAL: BRIAN C. DANKERT, P.E.
ON: 22-JUN-2021 14:14

ALTERED BY:
ON:

STATE OF NEW YORK
BRIAN C. DANKERT
No. 092443
LICENSED PROFESSIONAL ENGINEER

AS-BUILT REVISIONS
DESCRIPTION OF ALTERATIONS:

NY 78, TRANSIT ROAD, S.H. 1334A-1	PIN 5813.61	BRIDGES	CULVERTS	ALL DIMENSIONS IN ft UNLESS OTHERWISE NOTED
FRENCH ROAD TO WEHRLE DRIVE	NY 78			TRAFFIC SIGNAL #586 (ERIE) PLAN
TOWNS OF CHEEKTOWAGA & LANCASTER	UTILITY QUALITY LEVEL D			
VILLAGE OF DEPEW				
COUNTY: ERIE REGION: 05				

CONTRACT NUMBER
D264571

DRAWING NO. TSP-5
SHEET NO. 167

IT IS A VIOLATION OF LAW FOR ANY PERSON, UNLESS THEY ARE ACTING UNDER THE DIRECTION OF A LICENSED PROFESSIONAL ENGINEER, ARCHITECT, LANDSCAPE ARCHITECT, OR LAND SURVEYOR, TO ALTER AN ITEM IN ANY WAY. IF AN ITEM BEARING THE STAMP OF A LICENSED PROFESSIONAL IS ALTERED, THE ALTERING ENGINEER, ARCHITECT, LANDSCAPE ARCHITECT, OR LAND SURVEYOR SHALL STAMP THE DOCUMENT AND INCLUDE THE NOTATION "ALTERED BY" FOLLOWED BY THEIR SIGNATURE, THE DATE OF SUCH ALTERATION, AND A SPECIFIC DESCRIPTION OF THE ALTERATION.

NEW YORK STATE OF OPPORTUNITY. Department of Transportation

PROJECT MANAGER S. S. VAIDYA
CHECK BRIAN C. DANKERT
DRAFTING KEITH A. GORECKI
CHECK BRIAN C. DANKERT
DESIGN KEITH A. GORECKI
JOB MANAGER R. F. SCHALLER
DESIGN SUPERVISOR S. S. VAIDYA

FILE NAME = 581361_CPH_TSP_L0C02_1.dgn
DATE/TIME = 22-JUN-2021 14:14
USER = kgorecki

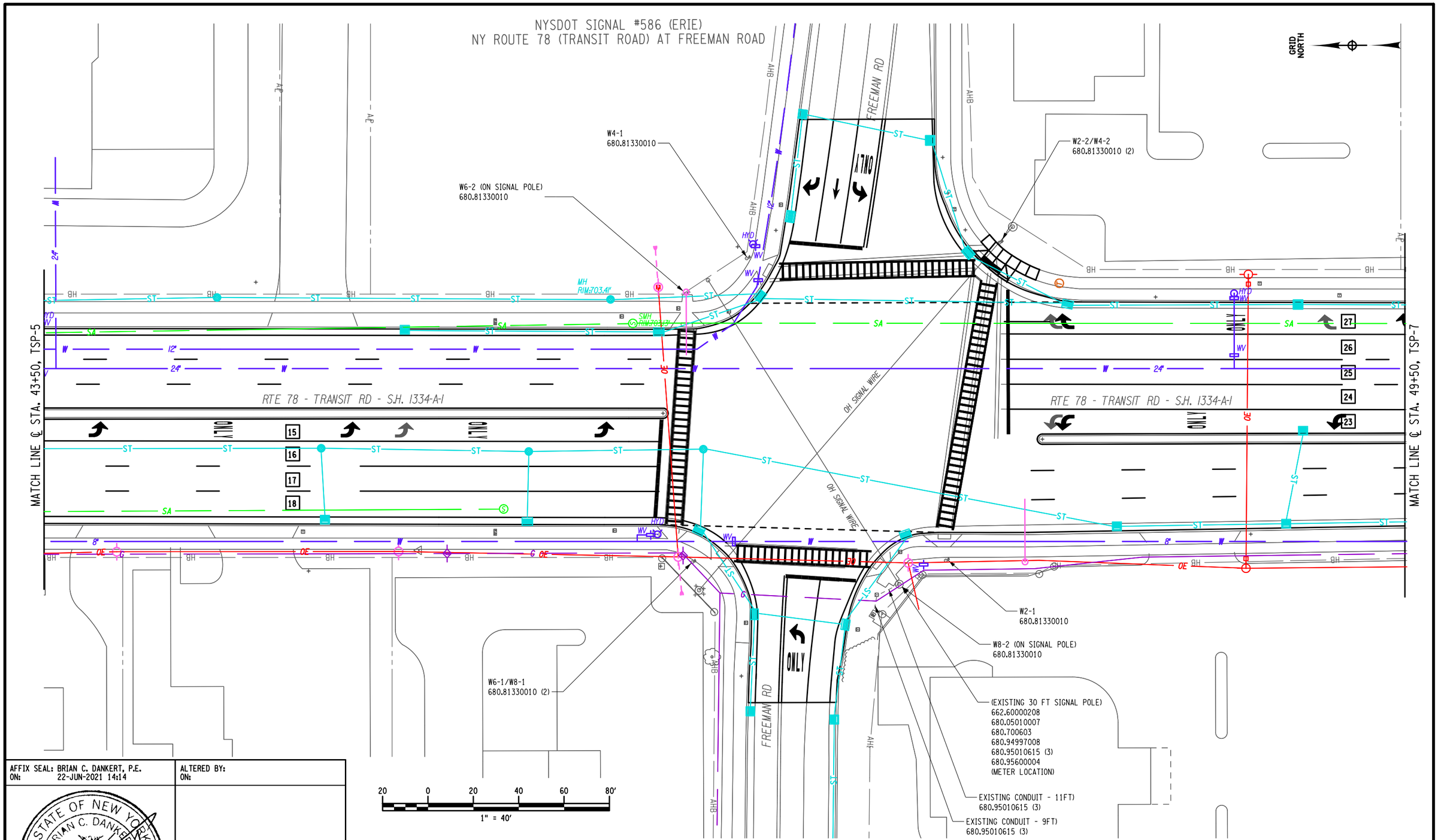

AFFIX SEAL: BRIAN C. DANKERT, P.E.
ON: 22-JUN-2021 14:14

ALTERED BY:
ON:

STATE OF NEW YORK · BRIAN C. DANKERT · No. 092443 · LICENSED PROFESSIONAL ENGINEER

AS-BUILT REVISIONS
DESCRIPTION OF ALTERATIONS:

NY 78, TRANSIT ROAD, S.H. 1334A-1
FRENCH ROAD TO WEHRLE DRIVE
TOWNS OF CHEEKTOWAGA & LANCASTER
VILLAGE OF DEPEW
COUNTY: ERIE REGION: 05

PIN 5813.61
NY 78
UTILITY QUALITY LEVEL D

BRIDGES

CULVERTS

ALL DIMENSIONS IN ft UNLESS OTHERWISE NOTED

TRAFFIC SIGNAL #586 (ERIE) PLAN

CONTRACT NUMBER
D264571

DRAWING NO. TSP-6
SHEET NO. 168

IT IS A VIOLATION OF LAW FOR ANY PERSON, UNLESS THEY ARE ACTING UNDER THE DIRECTION OF A LICENSED PROFESSIONAL ENGINEER, ARCHITECT, LANDSCAPE ARCHITECT, OR LAND SURVEYOR, TO ALTER AN ITEM IN ANY WAY. IF AN ITEM BEARING THE STAMP OF A LICENSED PROFESSIONAL IS ALTERED, THE ALTERING ENGINEER, ARCHITECT, LANDSCAPE ARCHITECT, OR LAND SURVEYOR SHALL STAMP THE DOCUMENT AND INCLUDE THE NOTATION "ALTERED BY" FOLLOWED BY THEIR SIGNATURE, THE DATE OF SUCH ALTERATION, AND A SPECIFIC DESCRIPTION OF THE ALTERATION.

NEW YORK STATE OF OPPORTUNITY. Department of Transportation

PROJECT MANAGER S. S. VAIDYA
CHECK BRIAN C. DANKERT
DRAFTING KEITH A. GORECKI
CHECK BRIAN C. DANKERT
DESIGN KEITH A. GORECKI
JOB MANAGER R. F. SCHALLER
DESIGN SUPERVISOR S. S. VAIDYA

FILE NAME = 581361_CPH_TSP_LOC02.2.dgn
DATE/TIME = 22-JUN-2021 14:14
USER = kgorecki

NYSDOT SIGNAL #586 (ERIE)
NY ROUTE 78 (TRANSIT ROAD) AT FREEMAN ROAD

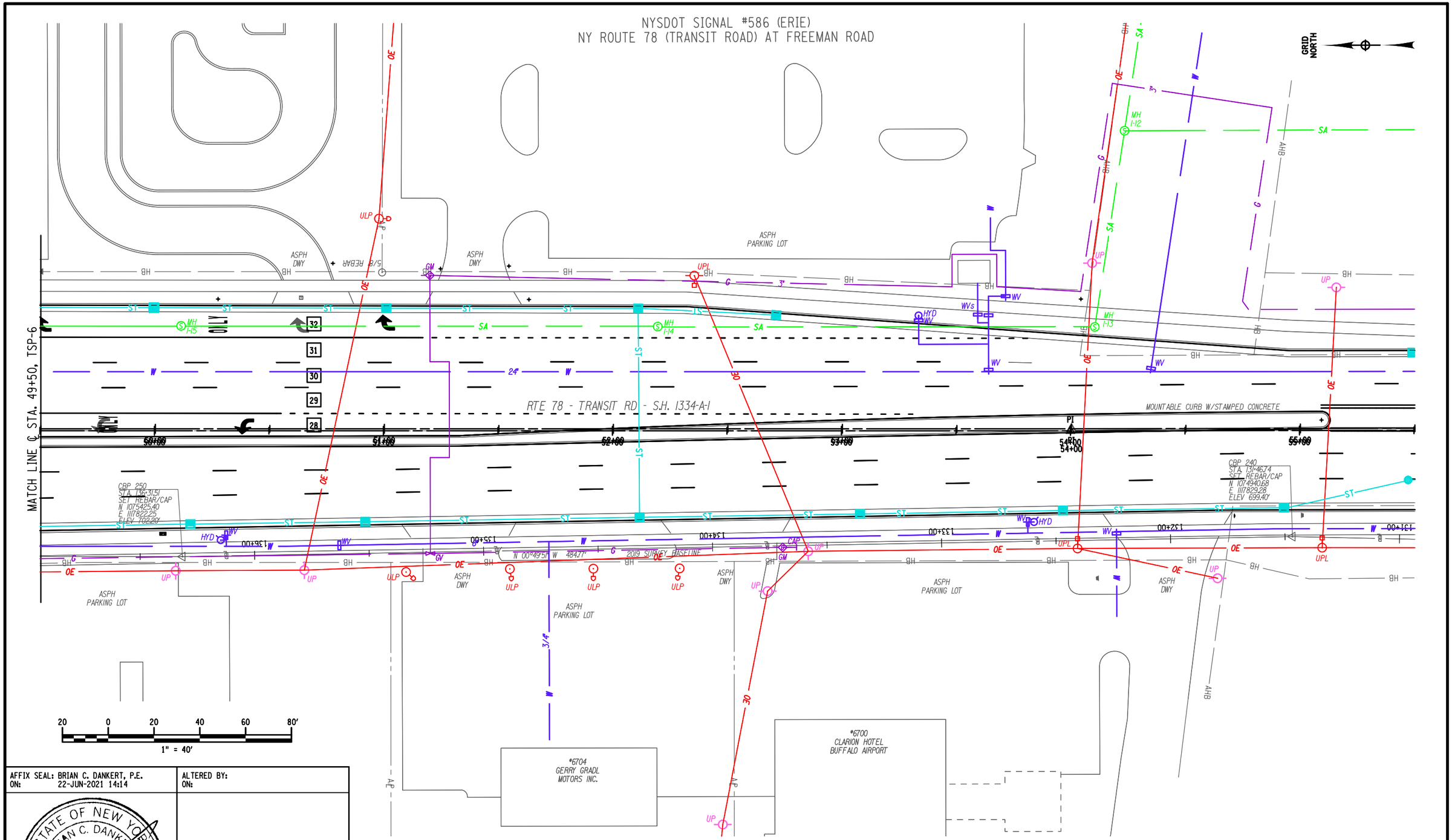

AFFIX SEAL: BRIAN C. DANKERT, P.E.
ON: 22-JUN-2021 14:14

ALTERED BY:
ON:

AS-BUILT REVISIONS
DESCRIPTION OF ALTERATIONS:

NY 78, TRANSIT ROAD, S.H. 1334A-1	PIN 5813.61	BRIDGES	CULVERTS	ALL DIMENSIONS IN ft UNLESS OTHERWISE NOTED
FRENCH ROAD TO WEHRLE DRIVE	NY 78			TRAFFIC SIGNAL #586 (ERIE) PLAN
TOWNS OF CHEEKTOWAGA & LANCASTER	UTILITY QUALITY LEVEL D			
VILLAGE OF DEPEW				
COUNTY: ERIE REGION: 05				

CONTRACT NUMBER
D264571

DRAWING NO. TSP-7
SHEET NO. 169

IT IS A VIOLATION OF LAW FOR ANY PERSON, UNLESS THEY ARE ACTING UNDER THE DIRECTION OF A LICENSED PROFESSIONAL ENGINEER, ARCHITECT, LANDSCAPE ARCHITECT, OR LAND SURVEYOR, TO ALTER AN ITEM IN ANY WAY. IF AN ITEM BEARING THE STAMP OF A LICENSED PROFESSIONAL IS ALTERED, THE ALTERING ENGINEER, ARCHITECT, LANDSCAPE ARCHITECT, OR LAND SURVEYOR SHALL STAMP THE DOCUMENT AND INCLUDE THE NOTATION "ALTERED BY" FOLLOWED BY THEIR SIGNATURE, THE DATE OF SUCH ALTERATION, AND A SPECIFIC DESCRIPTION OF THE ALTERATION.

NEW YORK STATE OF OPPORTUNITY. Department of Transportation

DESIGN SUPERVISOR S. S. VAIDYA
JOB MANAGER R. F. SCHALLER
DESIGN KEITH A. GORECKI
CHECK BRIAN C. DANKERT
DRAFTING KEITH A. GORECKI
CHECK BRIAN C. DANKERT
PROJECT MANAGER S. S. VAIDYA

FILE NAME = 581361_CPH_TSP_LOC02_3.dgn
DATE/TIME = 22-JUN-2021 14:14
USER = kgorecki

NYSDOT TRAFFIC SIGNAL #586 (ERIE)
NY ROUTE 78 (TRANSIT ROAD) AT FREEMAN ROAD

QUANTITY AND ITEM LIST			
SIGNAL #586 (ERIE) - NY ROUTE78 (TRANSIT ROAD) AT FREEMAN ROAD			
ITEM NO.	DESCRIPTION	UNIT	QTY
206.03050005	CONDUIT EXCAV & BACKFILL (IN ROADWAY)	FT	108
619.1611	MAINTAIN TRAFFIC SIGNAL EQUIPMENT (REQ A)	MO	8
662.60000208	FURNISHING ELECTRICAL SERVICE	DC	1
680.05010007	360 DEGREE CAMERA VIDEO DETECTION SYSTEM	EA	1
680.53080305	CONDUIT, FLEX-TIGHT NON-METAL, 1NPS	FT	108
680.54	INDUCTANCE LOOP INSTALLATION	FT	1520
680.700603	RISER ASSEMBLY, 1" DIA.	EA	1
680.72	INDUCTANCE LOOP WIRE	FT	2870
680.77000205	MODIFY TRAFFIC SIGNAL INSTALLATION, LOCATION 2	ELOC	1
680.79000205	REMOVE TRAFFIC SIGNAL INSTALLATION, LOCATION 2	ELOC	1
680.81330010	AUDIBLE PEDESTRIAN SIGNAL	EA	8
680.94997008	F AND I ELECTRICAL DISCONNECT GEN. TRAN SWITCH	EA	1
680.95010615	SERVICE CABLE, 1 CONDUCTOR, 6 AWG	FT	150
680.95600004	ELECTRICAL METER PAN	EA	1

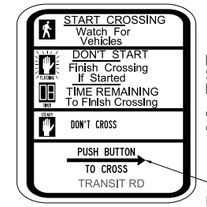

R10-3i

NEW PEDESTRIAN SIGNS SHALL BE SIGN NUMBER R10-3i FROM THE MUTCD.

"TRANSIT RD" FOR W2-1, W2-2, W6-1 & W6-2
"FREEMAN RD" FOR W4-1, W4-2, W8-1, & W8-2

ARROW MAY FACE LEFT OR RIGHT, IT IS CONTRACTORS RESPONSIBILITY FOR PROPER ARROW ORIENTATION.

1.) EXISTING PULLBOX LOCATIONS ON PLANS ARE SHOWN BASED ON RECORD PLANS. ACTUAL FIELD LOCATIONS MAY VARY.

2.) ITEM 680.77000205, "MODIFY TRAFFIC SIGNAL INSTALLATION, LOCATION 2" SHALL INCLUDE THE REQUIRED MODIFICATIONS TO THE EXISTING WIRING WITHIN THE SIGNAL CABINETS TO MATCH THE PROPOSED INPUT WIRING AND SWITCHPACKS FOUND IN THE PLANS.

3.) ITEM 680.79000205, "REMOVE TRAFFIC SIGNAL INSTALLATION, LOCATION 2" SHALL INCLUDE THE REMOVAL OF THE EXISTING TRAFFIC SIGNAL EQUIPMENT LISTED BELOW. ALL EQUIPMENT LISTED SHALL BE DISPOSED OF AND ONLY LED SERIAL NUMBERS SHALL BE RECORDED AND GIVEN TO NYSDOT TRAFFIC SIGNAL MAINTENANCE CREW.

- EXISTING RISER ASSEMBLY
- EXISTING DISCONNECT
- EXISTING ELECTRICAL SERVICE
- EXISITNG METER PAN
- EXISTING PEDESTRIAN PUSH BUTTONS

AUDIBLE WIRING NOTE:

THE COST TO FURNISH AND INSTALL WIRING BETWEEN THE AUDIBLE PEDESTRIAN SIGNAL (APS) UNITS AND THEIR RESPECTIVE CONTROL UNITS MOUNTED IN THE PED. HEADS SHALL BE INCLUDED UNDER PROVISIONS OF ITEM 680.81330010.

THE MANUFACTURER'S SUGGESTED CABLES FOR USE WITH AUDIBLE PEDESTRIAN SIGNAL UNITS ARE BELDEN 8489 FOR ABOVE GROUND.

BELDEN 8489, OR EQUIVALENT, SHALL BE USED WITH 680.81330010.

REFER TO "EZCOMMUNICATOR 4 WIRE NAVIGATOR APS SYSTEM INSTALLATION MANUAL" FOR MANUFACTURER'S INSTALLATION DETAILS AND PROCEDURES.

TRAFFIC SIGNAL #586 (ERIE)			
POWER SUPPLIER:			
EXISTING METER #:		NEW METER #:	
EXISTING ACCOUNT #:		NEW ACCOUNT #	
BILLING TO:			

DESIGN SUPERVISOR S. S. VAIDYA JOB MANAGER R. F. SCHALLER DESIGN KEITH A. GORECKI CHECK BRIAN C. DANKERT DRAFTING KEITH A. GORECKI CHECK BRIAN C. DANKERT PROJECT MANAGER S. S. VAIDYA

FILE NAME = 581361_CPH_TSP_LOC002_4.dgn
DATE/TIME = 22-JUN-2021 14:14
USER = kgorecki

AFFIX SEAL: BRIAN C. DANKERT, P.E.
ON: 22-JUN-2021 14:14

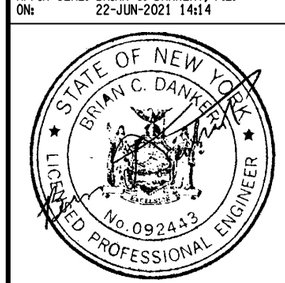

ALTERED BY:
ON:

AS-BUILT REVISIONS
DESCRIPTION OF ALTERATIONS:

NY 78, TRANSIT ROAD, S.H. 1334A-1
FRENCH ROAD TO WEHRLE DRIVE
TOWNS OF CHEEKTOWAGA & LANCASTER
VILLAGE OF DEPEW
COUNTY: ERIE REGION: 05

PIN 5813.61
NY 78
UTILITY QUALITY LEVEL D

BRIDGES

CULVERTS

ALL DIMENSIONS IN ft UNLESS OTHERWISE NOTED

TRAFFIC SIGNAL #586 (ERIE) PLAN

CONTRACT NUMBER
D264571

DRAWING NO. TSP-8
SHEET NO. 170

IT IS A VIOLATION OF LAW FOR ANY PERSON, UNLESS THEY ARE ACTING UNDER THE DIRECTION OF A LICENSED PROFESSIONAL ENGINEER, ARCHITECT, LANDSCAPE ARCHITECT, OR LAND SURVEYOR, TO ALTER AN ITEM IN ANY WAY. IF AN ITEM BEARING THE STAMP OF A LICENSED PROFESSIONAL IS ALTERED, THE ALTERING ENGINEER, ARCHITECT, LANDSCAPE ARCHITECT, OR LAND SURVEYOR SHALL STAMP THE DOCUMENT AND INCLUDE THE NOTATION "ALTERED BY" FOLLOWED BY THEIR SIGNATURE, THE DATE OF SUCH ALTERATION, AND A SPECIFIC DESCRIPTION OF THE ALTERATION.

NEW YORK STATE OF OPPORTUNITY. Department of Transportation

NYSDOT TRAFFIC SIGNAL #586 (ERIE)
NY ROUTE 78 (TRANSIT ROAD) AT FREEMAN ROAD

581361 - NY 78 (TRANSIT RD); FRENCH RD to ELLICOTT CREEK

05-53-586

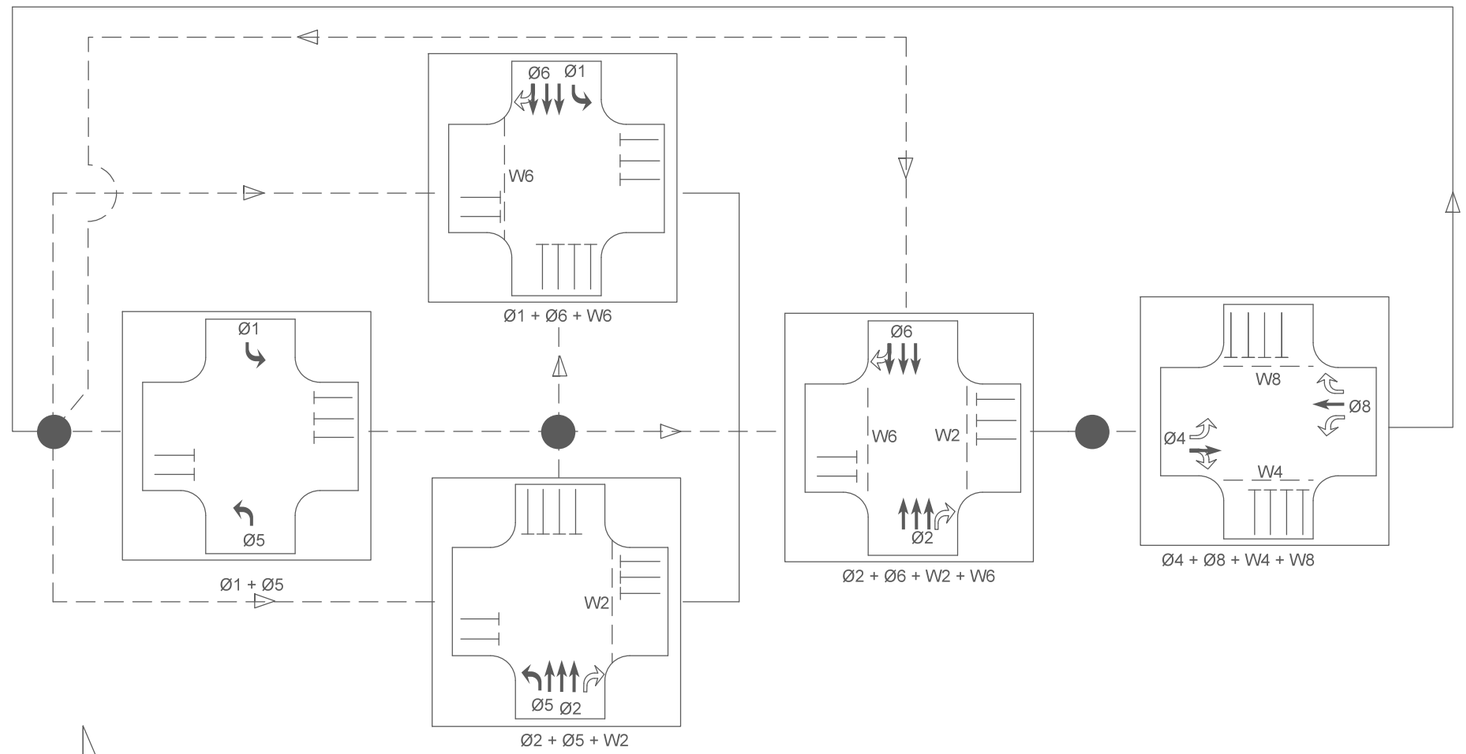

Ø1 - SB LEFT (TRANSIT RD, RTE. 78)
Ø2 - NB THROUGH/RIGHT (TRANSIT RD, RTE. 78)
Ø4 - EB THROUGH/RIGHT/LEFT (FREEMAN RD)
Ø5 - NB LEFT (TRANSIT RD, RTE. 78)
Ø6 - SB THROUGH/RIGHT (TRANSIT RD, RTE. 78)
Ø8 - WB THROUGH/RIGHT/LEFT (FREEMAN RD)

W2 - WB APPROACH PEDESTRIAN CROSSING
W4 - NB APPROACH PEDESTRIAN CROSSING
W6 - EB APPROACH PEDESTRIAN CROSSING
W8 - SB APPROACH PEDESTRIAN CROSSING

2/10/2020

PROJECT MANAGER S. S. VAIDYA
CHECK BRIAN C. DANKERT
DRAFTING KEITH A. GORECKI
CHECK BRIAN C. DANKERT
DESIGN KEITH A. GORECKI
JOB MANAGER R. F. SCHALLER
DESIGN SUPERVISOR S. S. VAIDYA

FILE NAME = 581361_CPH_TSP_L0C02.5.dgn
DATE/TIME = 22-JUN-2021 14:14
USER = kgorecki

AFFIX SEAL: BRIAN C. DANKERT, P.E.
ON: 22-JUN-2021 14:14

ALTERED BY:
ON:

STATE OF NEW YORK
BRIAN C. DANKERT
No. 092443
LICENSED PROFESSIONAL ENGINEER

AS-BUILT REVISIONS
DESCRIPTION OF ALTERATIONS:

NY 78, TRANSIT ROAD, S.H. 1334A-1
FRENCH ROAD TO WEHRLE DRIVE
TOWNS OF CHEEKTOWAGA & LANCASTER
VILLAGE OF DEPEW
COUNTY: ERIE REGION: 05

PIN 5813.61
NY 78
UTILITY QUALITY LEVEL D

BRIDGES

CULVERTS

ALL DIMENSIONS IN ft UNLESS OTHERWISE NOTED

TRAFFIC SIGNAL #586 (ERIE) PLAN

CONTRACT NUMBER
D264571

DRAWING NO. TSP-9
SHEET NO. 171

IT IS A VIOLATION OF LAW FOR ANY PERSON, UNLESS THEY ARE ACTING UNDER THE DIRECTION OF A LICENSED PROFESSIONAL ENGINEER, ARCHITECT, LANDSCAPE ARCHITECT, OR LAND SURVEYOR, TO ALTER AN ITEM IN ANY WAY. IF AN ITEM BEARING THE STAMP OF A LICENSED PROFESSIONAL IS ALTERED, THE ALTERING ENGINEER, ARCHITECT, LANDSCAPE ARCHITECT, OR LAND SURVEYOR SHALL STAMP THE DOCUMENT AND INCLUDE THE NOTATION "ALTERED BY" FOLLOWED BY THEIR SIGNATURE, THE DATE OF SUCH ALTERATION, AND A SPECIFIC DESCRIPTION OF THE ALTERATION.

NEW YORK STATE OF OPPORTUNITY. Department of Transportation

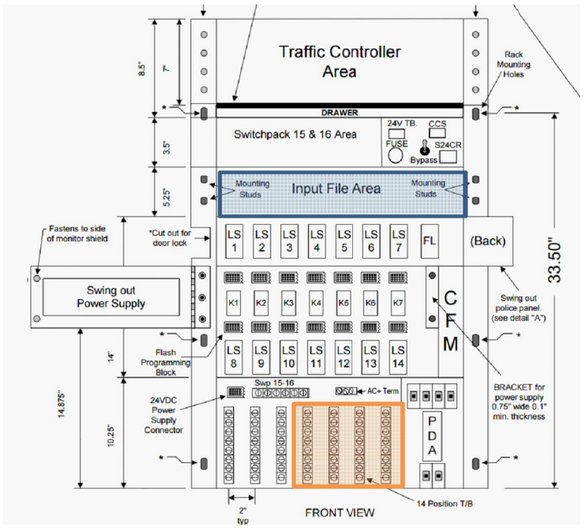

LOOP DETECTOR DATA TABLE								
NO.	SIZE	NO. TURNS	WIRED	FUNCTION	206.03050005 (FT)	680.53080305 (FT)	680.54 (FT)	680.72 (FT)
15	6 x 6	4	PULSE	TRANSIT ROAD SB	6	6	115	190
16	6 x 6	4	PULSE	TRANSIT ROAD SB	6	6	90	165
17	6 x 6	4	PULSE	TRANSIT ROAD SB	6	6	65	140
18	6 x 6	4	PULSE	TRANSIT ROAD SB	6	6	40	115
19	6 x 6	4	PULSE	TRANSIT ROAD SB	6	6	115	190
20	6 x 6	4	PULSE	TRANSIT ROAD SB	6	6	90	165
21	6 x 6	4	PULSE	TRANSIT ROAD SB	6	6	65	140
22	6 x 6	4	PULSE	TRANSIT ROAD SB	6	6	40	115
23	6 x 6	4	PULSE	TRANSIT ROAD NB	6	6	140	215
24	6 x 6	4	PULSE	TRANSIT ROAD NB	6	6	115	190
25	6 x 6	4	PULSE	TRANSIT ROAD NB	6	6	90	165
26	6 x 6	4	PULSE	TRANSIT ROAD NB	6	6	65	140
27	6 x 6	4	PULSE	TRANSIT ROAD NB	6	6	40	115
28	6 x 6	4	PULSE	TRANSIT ROAD NB	6	6	140	215
29	6 x 6	4	PULSE	TRANSIT ROAD NB	6	6	115	190
30	6 x 6	4	PULSE	TRANSIT ROAD NB	6	6	90	165
31	6 x 6	4	PULSE	TRANSIT ROAD NB	6	6	65	140
32	6 x 6	4	PULSE	TRANSIT ROAD NB	6	6	40	115
				TOTALS	108 FT	108 FT	1520 FT	2870 FT

STOP BAR DETECTION ACCOMPLISHED BY 360 DEGREE CAMERA.

KEY FOR WIRE COLOR CODE

14 / 7C - 1 - R / B

XX / XXC - X - X / X

AWG — NUMBER OF CONDUCTORS — CABLE NO. FOR THE GIVEN CONDUCTOR SIZE — COLOR OF WIRE — TRACER COLOR

COLOR

R-RED, O-ORANGE, G-GREEN, BL-BLUE, W-WHITE, B-BLACK

TYPE:
222 Dual Loop Vehicle Detector Module
232 Dual Magnetic Detector Amplifier Module
242 Dual Isolation Module (DC)
252 Dual Isolation Module (AC)

SIGNAL OPERATIONS SPECIFICATIONS — DATE: 6/4/2021

TABLE OF INPUT WIRING

SIGNAL NUMBER	05-53-586	COUNTY	Erie	INTERSECTION	Rt 78 @ Freeman Rd

INPUT FILE AREA		FUNCTION		DETECTOR LOCATION ID (PER PLAN)				TERMINAL WIRING BOARD				
SLOT	TYPE	(Φ#/PED #)	DESCRIPTION					TERMINAL	WIRE COLOR CODE			
1 - TOP	Video Card	Video Card	360 Degree Camera	Stop Bar Detectors				1A	As Per Supplier			
								1B	As Per Supplier			
1 - BOTTOM		Video Card						2A				
								2B				
2 - TOP	222	Φ6	SB T Rt 78 Setback	15	16	17	18	3A	SLI - 15 - W	SLI - 16 - W	SLI - 17 - W	SLI - 18 - W
								3B	SLI - 15 - B	SLI - 16 - B	SLI - 17 - B	SLI - 18 - B
2 - BOTTOM		Φ6	SB T Rt 78 Setback	19	20	21	22	4A	SLI - 19 - W	SLI - 20 - W	SLI -21 - W	SLI - 22 - W
								4B	SLI - 19 - B	SLI - 20 - B	SLI - 21 - B	SLI - 22 - B
3 - TOP	222	Φ2	NB T Rt 78 Setback	23	24	25	26	5A	SLI - 23 - W	SLI - 24 - W	SLI - 25 - W	SLI - 26 - W
								5B	SLI - 23 - B	SLI - 24 - B	SLI - 25 - B	SLI - 26 - B
3 - BOTTOM		Φ2	NB T Rt 78 Setback	27				6A	SLI - 27 - W			
								6B	SLI - 27 - B			
4 - TOP	222	Φ2	NB T Rt 78 Setback	28	29	30	31	7A	SLI - 28 - W	SLI - 29 - W	SLI - 30 - W	SLI - 31 - W
								7B	SLI - 28 - B	SLI - 29 - B	SLI - 30 - B	SLI - 31 - B
4 - BOTTOM		Φ2	NB T Rt 78 Setback	32				8A	SLI - 32 - W			
								8B	SLI - 32 - B			
5 - TOP								9A				
								9B				
5 - BOTTOM								10A				
								10B				
6 - TOP								11A				
								11B				
6 - BOTTOM								12A				
								12B				
7 - TOP								13A				
								13B				
7 - BOTTOM								14A				
								14B				
8 - TOP								15A				
								15B				
8 - BOTTOM								16A				
								16B				
9 - TOP								17A				
								17B				
9 - BOTTOM								18A				
								18B				
10 - TOP								19A				
								19B				
10 - BOTTOM								20A				
								20B				
11 - TOP								21A				
								21B				
11 - BOTTOM								22A				
								22B				
12 - TOP								9A				
								9B				
12 - BOTTOM								10A				
								10B				
13 - TOP	242	Φ2 Ped	Crossing Freeman Rd	W2.1	W2.2			25A	14/5C-W2.1-O	14/5C-W2.2-O		
								25B	14/5C-W2.1-B	14/5C-W2.2-B		
13 - BOTTOM		Φ4 Ped	Crossing Rt 78	W4.1	W4.2			26A	14/5C-W4.1-O	14/5C-W4.2-O		
								26B	14/5C-W4.1-B	14/5C-W4.2-B		
14 - TOP	242	Φ6 Ped	Crossing Freemand Rd	W6.1	W6.2			27A	14/5C-W6.1-O	14/5C-W6.2-O		
								27B	14/5C-W6.1-B	14/5C-W6.2-B		
14 - BOTTOM		Φ8 Ped	Crossing Rt 78	W8.1	W8.2			28A	14/5C-W8.1-O	14/5C-W8.2-O		
								28B	14/5C-W8.1-B	14/5C-W8.2-B		

AFFIX SEAL: BRIAN C. DANKERT, P.E.
ON: 22-JUN-2021 14:14

ALTERED BY:
ON:

AS-BUILT REVISIONS
DESCRIPTION OF ALTERATIONS:

NY 78, TRANSIT ROAD, S.H. 1334A-1
FRENCH ROAD TO WEHRLE DRIVE
TOWNS OF CHEEKTOWAGA & LANCASTER
VILLAGE OF DEPEW
COUNTY: ERIE REGION: 05

PIN 5813.61
NY 78
UTILITY QUALITY LEVEL D

BRIDGES

CULVERTS

ALL DIMENSIONS IN ft UNLESS OTHERWISE NOTED

TRAFFIC SIGNAL #586 (ERIE) PLAN

CONTRACT NUMBER D264571

DRAWING NO. TSP-10
SHEET NO. 172

IT IS A VIOLATION OF LAW FOR ANY PERSON, UNLESS THEY ARE ACTING UNDER THE DIRECTION OF A LICENSED PROFESSIONAL ENGINEER, ARCHITECT, LANDSCAPE ARCHITECT, OR LAND SURVEYOR, TO ALTER AN ITEM IN ANY WAY. IF AN ITEM BEARING THE STAMP OF A LICENSED PROFESSIONAL IS ALTERED, THE ALTERING ENGINEER, ARCHITECT, LANDSCAPE ARCHITECT, OR LAND SURVEYOR SHALL STAMP THE DOCUMENT AND INCLUDE THE NOTATION "ALTERED BY" FOLLOWED BY THEIR SIGNATURE, THE DATE OF SUCH ALTERATION, AND A SPECIFIC DESCRIPTION OF THE ALTERATION.

NEW YORK STATE OF OPPORTUNITY. Department of Transportation

DESIGN SUPERVISOR S. S. VAIDYA
JOB MANAGER R. F. SCHALLER
DESIGN KEITH A. GORECKI
CHECK BRIAN C. DANKERT
DRAFTING KEITH A. GORECKI
CHECK BRIAN C. DANKERT
PROJECT MANAGER S. S. VAIDYA
FILE NAME = 581361_CPH_TSP_LOC02_6.dgn
DATE/TIME = 22-JUN-2021 14:14
USER = kgorecki

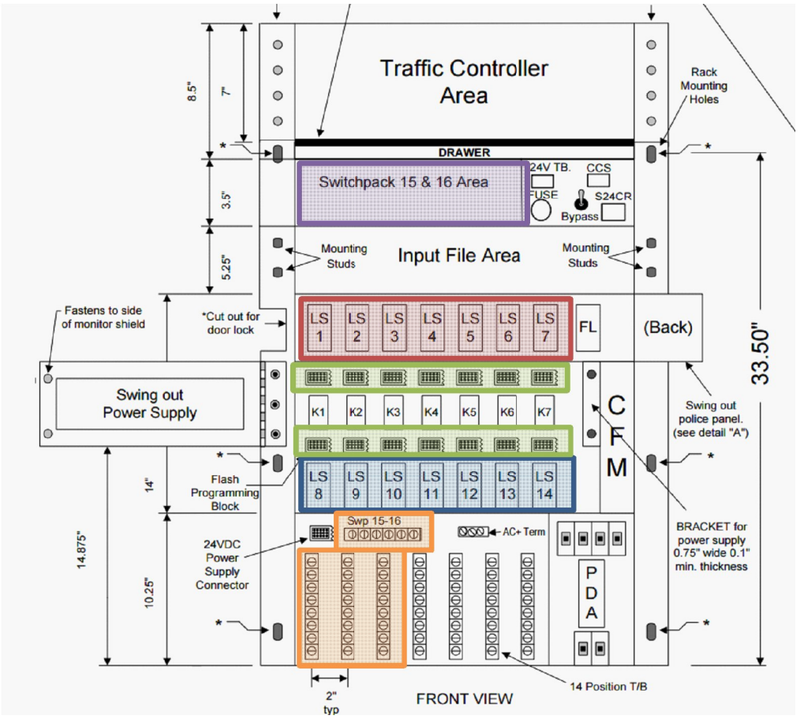

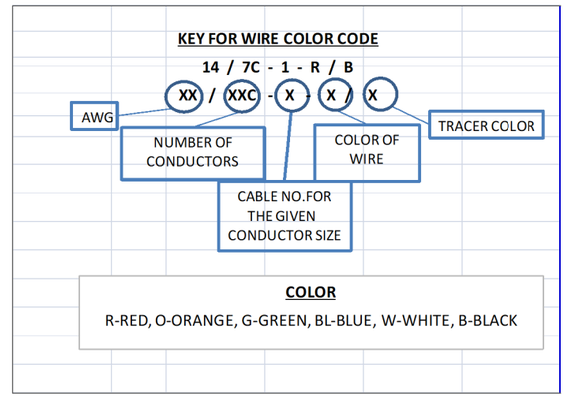

LEGEND

INDICATIONS					
G	= CIRCULAR GREEN	Y	= CIRCULAR YELLOW	R	= CIRCULAR RED
← G	= LEFT GREEN ARROW	← Y	= LEFT YELLOW ARROW	← R	= LEFT RED ARROW
→ G	= RIGHT GREEN ARROW	→ Y	= RIGHT YELLOW ARROW	→ R	= RIGHT RED ARROW
↑ G	= VERT. GREEN ARROW	← FY	= FLASHING YELLOW ARROW	WALK	=HAND/MAN
				DON'T WALK	=FLASHING HAD/COUNT DOWN TIMER
FLASH PLUG					
W	=DARK				
R	=FLASH RED				

SIGNAL OPERATIONS SPECIFICATIONS — DATE: 3/4/2021

TABLE OF SWITCH PACKS

SIGNAL NUMBER		05-53-586				COUNTY	Erie	INTERSECTION	Rt 78 @ Freeman Rd			
SWITCH PACK	FUNCTION (Φ#/OVLP)	FACE NUMBERS				FLASH PLUG	INDICATIONS	TERMINAL	TERMINAL WIRING BOARD WIRE COLOR CODE PER FACE			
TOP ROW (LS1-LS7)												
SP 1	Φ1	1				R	← R	SP 1R	14/5C-1-R			
							← Y	SP 1Y	14/5C-1-Y			
							← G	SP 1G	14/5C-1-G			
							GND. BAR	GND. BUS	14/5C-1-W			
SP 2	Φ2	5	6	7		Y	R	SP 2R	14/5C-5-R	14/5C-6-R	14/5C-7-R	
							Y	SP 2Y	14/5C-5-Y	14/5C-6-Y	14/5C-7-Y	
							G	SP 2G	14/5C-5-G	14/5C-6-G	14/5C-7-G	
							GND. WIRE	GND. BUS	14/5C-5-W	14/5C-6-W	14/5C-7-W	
SP 3								SP 3R				
								SP 3Y				
								SP 3G				
							GND. WIRE	GND. BUS				
SP 4	Φ4	10	11			R	R	SP 4R	14/5C-10-R	14/5C-11-R		
							Y	SP 4Y	14/5C-10-Y	14/5C-11-Y		
							G	SP 4G	14/5C-10-G	14/5C-11-G		
							GND. WIRE	GND. BUS	14/5C-10-W	14/5C-11-W		
SP 5	Φ5	4				R	← R	SP 5R	14/5C-4-R			
							← Y	SP 5Y	14/5C-4-Y			
							← G	SP 5G	14/5C-4-G			
							GND. WIRE	GND. BUS	14/5C-4-W			
SP 6	Φ6	2	3			Y	R	SP 6R	14/5C-2-R	14/5C-3-R		
							Y	SP 6Y	14/5C-2-Y	14/5C-3-Y		
							G	SP 6G	14/5C-2-G	14/5C-3-G		
							GND. WIRE	GND. BUS	14/5C-2-W	14/5C-3-W		
SP 7								SP 7R				
								SP 7Y				
								SP 7G				
							GND. WIRE	GND. BUS				
BOTTOM ROW (LS8-LS14)												
SP 8	Φ8	8	9			R	R	SP 8R	14/5C-8-R	14/5C-9-R		
							Y	SP 8Y	14/5C-8-Y	14/5C-9-Y		
							G	SP 8G	14/5C-8-G	14/5C-9-G		
							GND. WIRE	GND. BUS	14/5C-8-W	14/5C-9-W		
SP 9								SP 9R				
								SP 9Y				
								SP 9G				
							GND. WIRE	GND. BUS				
SP 10						W		SP 10R				
								SP 10Y				
								SP 10G				
							GND. WIRE	GND. BUS				
SP 11	Φ2 Ped	W2.1	W2.2			W	DON'T WALK	SP 11R	14/5C-W2.1-R	14/5C-W2.2-R		
								SP 11Y				
							WALK	SP 11G	14/5C-W2.1-G	14/5C-W2.2-G		
							GND. WIRE	GND. BUS	14/5C-W2.1-W	14/5C-W2.2-W		
SP 12	Φ4 Ped	W4.1	W4.2			W	DON'T WALK	SP 12R	14/5C-W4.1-R	14/5C-W4.2-R		
								SP 12Y				
							WALK	SP 12G	14/5C-W4.1-G	14/5C-W4.2-G		
							GND. WIRE	GND. BUS	14/5C-W4.1-W	14/5C-W4.2-W		
SP 13	Φ6 Ped	W6.1	W6.2			W	DON'T WALK	SP 13R	14/5C-W6.1-R	14/5C-W6.2-R		
								SP 13Y				
							WALK	SP 13G	14/5C-W6.1-G	14/5C-W6.2-G		
							GND. WIRE	GND. BUS	14/5C-W6.1-W	14/5C-W6.2-W		
SP 14	Φ8 Ped	W8.1	W8.2			W	DON'T WALK	SP 14R	14/5C-W8.1-R	14/5C-W8.2-R		
								SP 14Y				
							WALK	SP 14G	14/5C-W8.1-G	14/5C-W8.2-G		
							GND. WIRE	GND. BUS	14/5C-W8.1-W	14/5C-W8.2-W		
SPECIAL												
SP 15								SP 15R				
								SP 15Y				
								SP 15G				
							GND. WIRE	GND. BUS				
SP 16								SP 16R				
								SP 16Y				
								SP 16G				
							GND. WIRE	GND. BUS				

AFFIX SEAL: BRIAN C. DANKERT, P.E.
ON: 22-JUN-2021 14:14

ALTERED BY:
ON:

AS-BUILT REVISIONS
DESCRIPTION OF ALTERATIONS:

NY 78, TRANSIT ROAD, S.H. 1334A-1
FRENCH ROAD TO WEHRLE DRIVE
TOWNS OF CHEEKTOWAGA & LANCASTER
VILLAGE OF DEPEW
COUNTY: ERIE REGION: 05

PIN 5813.61
NY 78
UTILITY QUALITY LEVEL D

BRIDGES

CULVERTS

ALL DIMENSIONS IN ft UNLESS OTHERWISE NOTED

TRAFFIC SIGNAL #586 (ERIE) PLAN

CONTRACT NUMBER D264571

DRAWING NO. TSP-11
SHEET NO. 173

IT IS A VIOLATION OF LAW FOR ANY PERSON, UNLESS THEY ARE ACTING UNDER THE DIRECTION OF A LICENSED PROFESSIONAL ENGINEER, ARCHITECT, LANDSCAPE ARCHITECT, OR LAND SURVEYOR, TO ALTER AN ITEM IN ANY WAY. IF AN ITEM BEARING THE STAMP OF A LICENSED PROFESSIONAL IS ALTERED, THE ALTERING ENGINEER, ARCHITECT, LANDSCAPE ARCHITECT, OR LAND SURVEYOR SHALL STAMP THE DOCUMENT AND INCLUDE THE NOTATION "ALTERED BY" FOLLOWED BY THEIR SIGNATURE, THE DATE OF SUCH ALTERATION, AND A SPECIFIC DESCRIPTION OF THE ALTERATION.

NEW YORK STATE OF OPPORTUNITY. Department of Transportation

DESIGN SUPERVISOR S. S. VAIDYA
JOB MANAGER R. F. SCHALLER
DESIGN KEITH A. GORECKI
CHECK BRIAN C. DANKERT
DRAFTING KEITH A. GORECKI
CHECK BRIAN C. DANKERT
PROJECT MANAGER S. S. VAIDYA
FILE NAME = 581361_CPH_TSP_LOC02_7.dgn
DATE/TIME = 22-JUN-2021 14:14
USER = kgorecki

NYSDOT SIGNAL #310 (ERIE)
NY ROUTE 78 (TRANSIT ROAD) AT I-90 INTERCHANGE

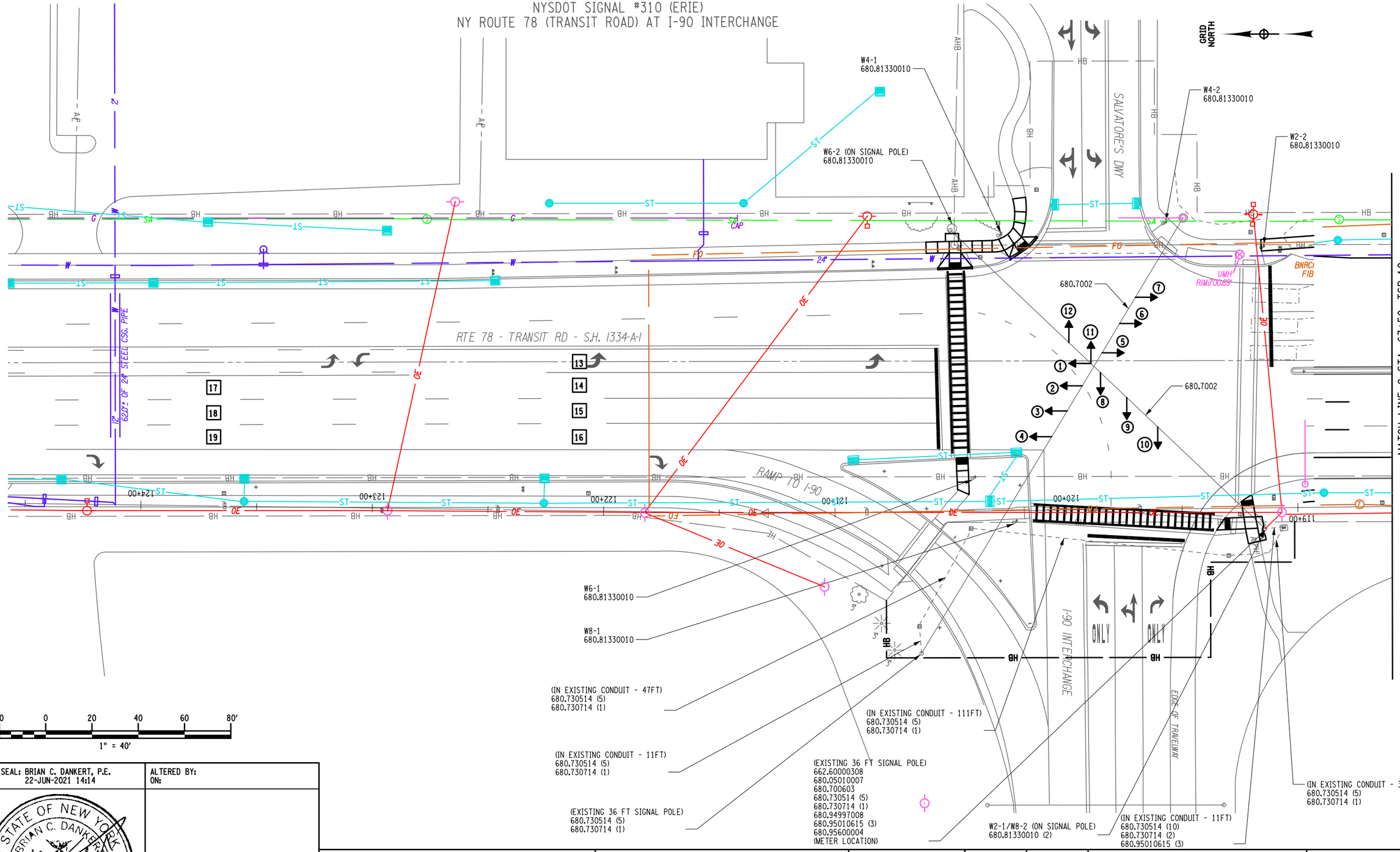

PROJECT MANAGER S. S. VAIDYA
CHECK BRIAN C. DANKERT
DRAFTING KEITH A. GORECKI
DESIGN KEITH A. GORECKI
JOB MANAGER R. F. SCHALLER
DESIGN SUPERVISOR S. S. VAIDYA

FILE NAME = 581361_CPH_TSP_L0C03_1.dgn
DATE/TIME = 22-JUN-2021 14:14
USER = kgorecki

AFFIX SEAL: BRIAN C. DANKERT, P.E.
ON: 22-JUN-2021 14:14

STATE OF NEW YORK
BRIAN C. DANKERT
No. 092443
LICENSED PROFESSIONAL ENGINEER

ALTERED BY:
ON:

AS-BUILT REVISIONS
DESCRIPTION OF ALTERATIONS:

NY 78, TRANSIT ROAD, S.H. 1334A-1
FRENCH ROAD TO WEHRLE DRIVE
TOWNS OF CHEEKTOWAGA & LANCASTER
VILLAGE OF DEPEW
COUNTY: ERIE REGION: 05

PIN 5813.61
NY 78
UTILITY QUALITY LEVEL D

BRIDGES

CULVERTS

ALL DIMENSIONS IN ft UNLESS OTHERWISE NOTED

TRAFFIC SIGNAL #310 (ERIE) PLAN

CONTRACT NUMBER
D264571

DRAWING NO. TSP-12
SHEET NO. 174

IT IS A VIOLATION OF LAW FOR ANY PERSON, UNLESS THEY ARE ACTING UNDER THE DIRECTION OF A LICENSED PROFESSIONAL ENGINEER, ARCHITECT, LANDSCAPE ARCHITECT, OR LAND SURVEYOR, TO ALTER AN ITEM IN ANY WAY. IF AN ITEM BEARING THE STAMP OF A LICENSED PROFESSIONAL IS ALTERED, THE ALTERING ENGINEER, ARCHITECT, LANDSCAPE ARCHITECT, OR LAND SURVEYOR SHALL STAMP THE DOCUMENT AND INCLUDE THE NOTATION "ALTERED BY" FOLLOWED BY THEIR SIGNATURE, THE DATE OF SUCH ALTERATION, AND A SPECIFIC DESCRIPTION OF THE ALTERATION.

NEW YORK STATE OF OPPORTUNITY. Department of Transportation

NYSDOT SIGNAL #310 (ERIE)
NY ROUTE 78 (TRANSIT ROAD) AT I-90 INTERCHANGE

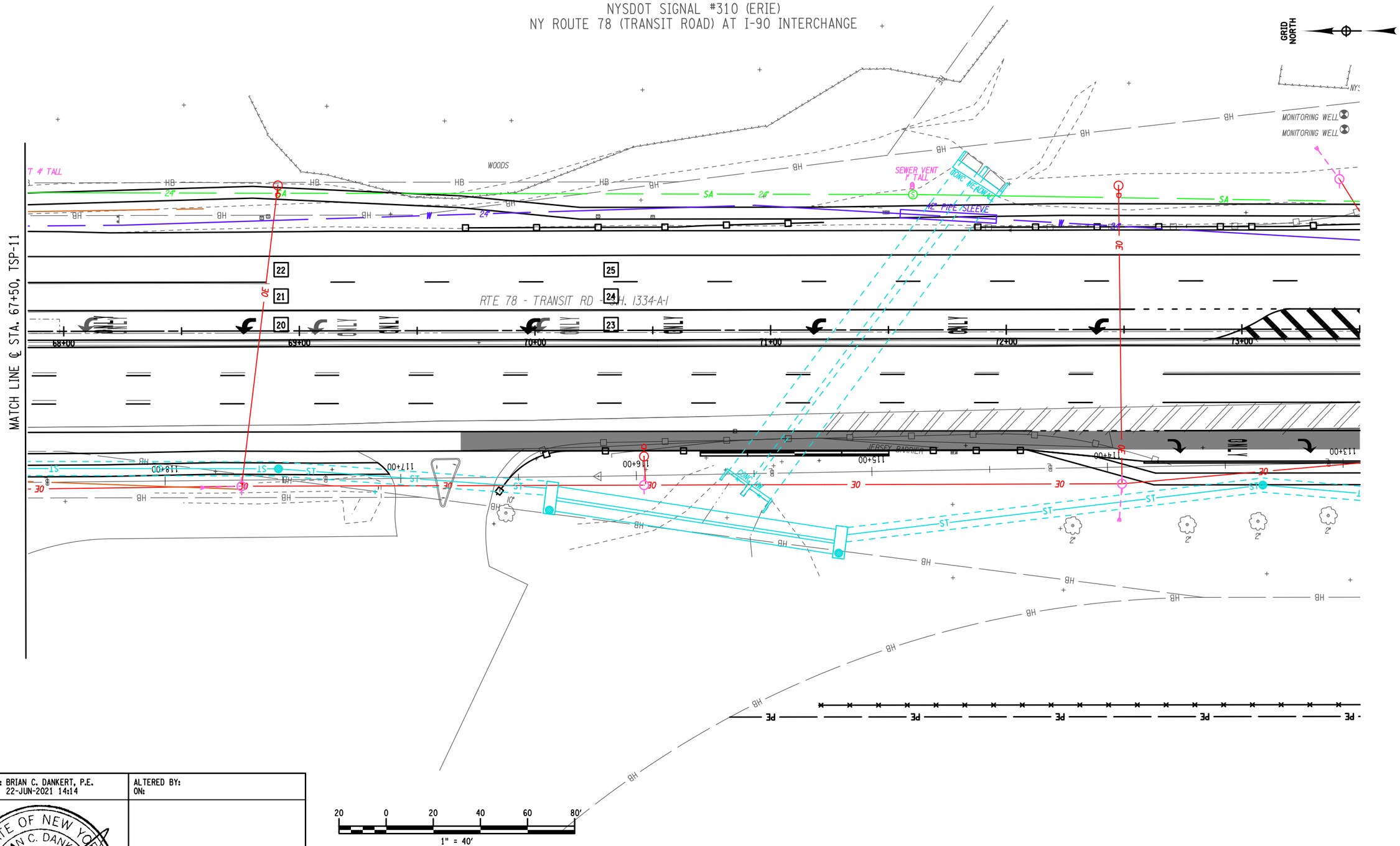

AFFIX SEAL: BRIAN C. DANKERT, P.E. ON: 22-JUN-2021 14:14	ALTERED BY: ON:

AS-BUILT REVISIONS
DESCRIPTION OF ALTERATIONS:

NY 78, TRANSIT ROAD, S.H. 1334A-1	PIN 5813.61 NY 78 UTILITY QUALITY LEVEL D	BRIDGES	CULVERTS	ALL DIMENSIONS IN ft UNLESS OTHERWISE NOTED
FRENCH ROAD TO WEHRLE DRIVE				TRAFFIC SIGNAL #310 (ERIE) PLAN
TOWNS OF CHEEKTOWAGA & LANCASTER				
VILLAGE OF DEPEW				
COUNTY: ERIE REGION: 05				

CONTRACT NUMBER
D264571

DRAWING NO. TSP-13
SHEET NO. 175

IT IS A VIOLATION OF LAW FOR ANY PERSON, UNLESS THEY ARE ACTING UNDER THE DIRECTION OF A LICENSED PROFESSIONAL ENGINEER, ARCHITECT, LANDSCAPE ARCHITECT, OR LAND SURVEYOR, TO ALTER AN ITEM IN ANY WAY. IF AN ITEM BEARING THE STAMP OF A LICENSED PROFESSIONAL IS ALTERED, THE ALTERING ENGINEER, ARCHITECT, LANDSCAPE ARCHITECT, OR LAND SURVEYOR SHALL STAMP THE DOCUMENT AND INCLUDE THE NOTATION "ALTERED BY" FOLLOWED BY THEIR SIGNATURE, THE DATE OF SUCH ALTERATION, AND A SPECIFIC DESCRIPTION OF THE ALTERATION.

NEW YORK STATE OF OPPORTUNITY. Department of Transportation

DESIGN SUPERVISOR S. S. VAIDYA | JOB MANAGER R. F. SCHALLER | DESIGN KEITH A. GORECKI | CHECK BRIAN C. DANKERT | PROJECT MANAGER S. S. VAIDYA

FILE NAME = 581361_CPH_TSP_LOC03_2.dgn
DATE/TIME = 22-JUN-2021 14:14
USER = kgorecki

NYSDOT TRAFFIC SIGNAL #310 (ERIE)
NY ROUTE 78 (TRANSIT ROAD) AT I-90 INTERCHANGE

QUANTITY AND ITEM LIST

SIGNAL #310 (ERIE) - NY ROUTE 78 (TRANSIT ROAD) AT I-90 INTERCHANGE

ITEM NO.	DESCRIPTION	UNIT	QTY
206.03050005	CONDUIT EXCAV & BACKFILL (IN ROADWAY)	FT	78
619.1611	MAINTAIN TRAFFIC SIGNAL EQUIPMENT (REQ A)	MO	8
662.60000308	FURNISHING ELECTRICAL SERVICE	DC	1
680.05010007	360 DEGREE CAMERA VIDEO DETECTION SYSTEM	EA	1
680.53080305	CONDUIT, FLEX-TIGHT NON-METAL, 1NPS	FT	78
680.54	INDUCTANCE LOOP INSTALLATION	FT	895
680.7002	DUAL SPAN WIRE ASSEMBLY / UPPER TETHER	EA	2
680.700603	RISER ASSEMBLY, 1" DIA.	EA	1
680.72	INDUCTANCE LOOP WIRE	FT	1870
680.730514	SIGNAL CABLE, 5 CONDUCTOR, 14 AWG	FT	2253
680.730714	SIGNAL CABLE, 7 CONDUCTOR, 14 AWG	FT	448
680.77000305	MODIFY TRAFFIC SIGNAL INSTALLATION, LOCATION 3	ELOC	1
680.79000305	REMOVE TRAFFIC SIGNAL INSTALLATION, LOCATION 3	ELOC	1
680.810101	SIGNAL MODULE - 12 IN, RED BALL LED	EA	10
680.810102	SIGNAL MODULE - 12 IN, RED ARROW LED	EA	2
680.810103	SIGNAL MODULE - 12 IN, YELLOW BALL LED	EA	10
680.810104	SIGNAL MODULE - 12 IN, YELLOW ARROW LED	EA	4
680.810105	SIGNAL MODULE - 12 IN, GREEN BALL LED	EA	10
680.810106	SIGNAL MODULE - 12 IN, GREEN ARROW LED	EA	2
680.810601	SIGNAL SECTION, POLYCARBONITE, TYPE 1, 12IN	EA	38
680.8111	TRAFFIC SIGNAL BRACKET ASSEMBLY - 1 WAY	EA	10
680.8112	TRAFFIC SIGNAL BRACKET ASSEMBLY - 2 WAY	EA	1
680.81330010	AUDIBLE PEDESTRIAN SIGNAL	EA	8
680.81990003	TRAFFIC SIGNAL HEAD BACKPLATES WITH YELLOW STRIPES	EA	12
680.94997008	F AND I ELECTRICAL DISCONNECT GEN. TRAN SWITCH	EA	1
680.95010615	SERVICE CABLE, 1 CONDUCTOR, 6 AWG	FT	141
680.95600004	ELECTRICAL METER PAN	EA	1

1.) EXISTING PULLBOX LOCATIONS ON PLANS ARE SHOWN BASED ON RECORD PLANS. ACTUAL FIELD LOCATIONS MAY VARY.

2.) ITEM 680.77000305, "MODIFY TRAFFIC SIGNAL INSTALLATION, LOCATION 3" SHALL INCLUDE THE REQUIRED MODIFICATIONS TO THE EXISTING WIRING WITHIN THE SIGNAL CABINETS TO MATCH THE PROPOSED INPUT WIRING AND SWITCHPACKS FOUND IN THE PLANS.

3.) ITEM 680.79000305, "REMOVE TRAFFIC SIGNAL INSTALLATION, LOCATION 3" SHALL INCLUDE THE REMOVAL OF THE EXISTING TRAFFIC SIGNAL EQUIPMENT LISTED BELOW. ALL EQUIPMENT LISTED SHALL BE DISPOSED OF AND ONLY LED SERIAL NUMBERS SHALL BE RECORDED AND GIVEN TO NYSDOT TRAFFIC SIGNAL MAINTENANCE CREW.

- EXISTING RISER ASSEMBLY
- EXISTING DISCONNECT
- EXISTING ELECTRICAL SERVICE
- EXISITNG METER PAN
- EXISTING PEDESTRIAN PUSH BUTTONS
- EXISTING SIGNAL HEADS AND SIGNAL CONDUCTOR WIRING
- EXISTING SPAN WIRE ASSEMBLY

SIGNAL HEAD DATA TABLE

FACE \ ITEM	680.810101	680.810102	680.810103	680.810104	680.810105	680.810106	680.810601	680.8111	680.8112	680.81990003
1	-	1	-	2	-	1	4	-	1	1
11	1	-	1	-	1	-	3	-		1
2	1	-	1	-	1	-	3	1	-	1
3	1	-	1	-	1	-	3	1	-	1
4	1	-	1	-	1	-	3	1	-	1
5	-	1	-	2	-	1	4	1	-	1
7	1	-	1	-	1	-	3	1	-	1
8	1	-	1	-	1	-	3	1	-	1
9	1	-	1	-	1	-	3	1	-	1
10	1	-	1	-	1	-	3	1	-	1
11	1	-	1	-	1	-	3	1	-	1
12	1	-	1	-	1	-	3	1	-	1
TOTALS	**10 EA**	**2 EA**	**10 EA**	**4 EA**	**10 EA**	**2 EA**	**38 EA**	**10 EA**	**1 EA**	**12 EA**

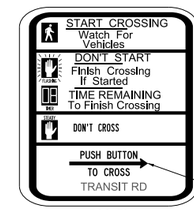

R10-3i

NEW PEDESTRIAN SIGNS SHALL BE SIGN NUMBER R10-3i FROM THE MUTCD.

"TRANSIT RD" FOR W2-1, W2-2, W6-1 & W6-2
"DRIVEWAY" FOR W4-1 & W4-2
"I-90 INT" W8-1 & W8-2

ARROW MAY FACE LEFT OR RIGHT, IT IS CONTRACTORS RESPONSIBILITY FOR PROPER ARROW ORIENTATION.

AUDIBLE WIRING NOTE:

THE COST TO FURNISH AND INSTALL WIRING BETWEEN THE AUDIBLE PEDESTRIAN SIGNAL (APS) UNITS AND THEIR RESPECTIVE CONTROL UNITS MOUNTED IN THE PED. HEADS SHALL BE INCLUDED UNDER PROVISIONS OF ITEM 680.81330010.

THE MANUFACTURER'S SUGGESTED CABLES FOR USE WITH AUDIBLE PEDESTRIAN SIGNAL UNITS ARE BELDEN 8489 FOR ABOVE GROUND.

BELDEN 8489, OR EQUIVALENT, SHALL BE USED WITH 680.81330010.

REFER TO "EZCOMMUNICATOR 4 WIRE NAVIGATOR APS SYSTEM INSTALLATION MANUAL" FOR MANUFACTURER'S INSTALLATION DETAILS AND PROCEDURES.

TRAFFIC SIGNAL #310 (ERIE)			
POWER SUPPLIER:			
EXISTING METER #:		NEW METER #:	
EXISTING ACCOUNT #:		NEW ACCOUNT #	
BILLING TO:			

AFFIX SEAL: BRIAN C. DANKERT, P.E.
ON: 22-JUN-2021 14:15

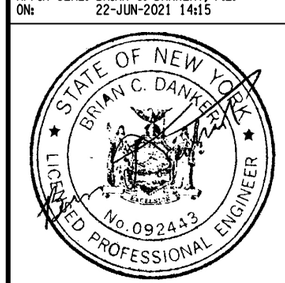

ALTERED BY:
ON:

AS-BUILT REVISIONS
DESCRIPTION OF ALTERATIONS:

NY 78, TRANSIT ROAD, S.H. 1334A-1
FRENCH ROAD TO WEHRLE DRIVE
TOWNS OF CHEEKTOWAGA & LANCASTER
VILLAGE OF DEPEW
COUNTY: ERIE REGION: 05

PIN 5813.61
NY 78
UTILITY QUALITY LEVEL D

BRIDGES

CULVERTS

ALL DIMENSIONS IN ft UNLESS OTHERWISE NOTED

TRAFFIC SIGNAL #310 (ERIE) PLAN

CONTRACT NUMBER D264571

DRAWING NO. TSP-14
SHEET NO. 176

IT IS A VIOLATION OF LAW FOR ANY PERSON, UNLESS THEY ARE ACTING UNDER THE DIRECTION OF A LICENSED PROFESSIONAL ENGINEER, ARCHITECT, LANDSCAPE ARCHITECT, OR LAND SURVEYOR, TO ALTER AN ITEM IN ANY WAY. IF AN ITEM BEARING THE STAMP OF A LICENSED PROFESSIONAL IS ALTERED, THE ALTERING ENGINEER, ARCHITECT, LANDSCAPE ARCHITECT, OR LAND SURVEYOR SHALL STAMP THE DOCUMENT AND INCLUDE THE NOTATION "ALTERED BY" FOLLOWED BY THEIR SIGNATURE, THE DATE OF SUCH ALTERATION, AND A SPECIFIC DESCRIPTION OF THE ALTERATION.

NEW YORK STATE OF OPPORTUNITY. Department of Transportation

DESIGN SUPERVISOR S. S. VAIDYA JOB MANAGER R. F. SCHALLER DESIGN KEITH A. GORECKI CHECK BRIAN C. DANKERT DRAFTING KEITH A. GORECKI CHECK BRIAN C. DANKERT PROJECT MANAGER S. S. VAIDYA

FILE NAME = 581361_CPH_TSP_L0003_3.dgn
DATE/TIME = 22-JUN-2021 14:15
USER = kgorecki

NYSDOT TRAFFIC SIGNAL #310 (ERIE)
NY ROUTE 78 (TRANSIT ROAD) AT I-90 INTERCHANGE

581361 - NY 78 (TRANSIT RD); FRENCH RD to ELLICOTT CREEK

05-53-310

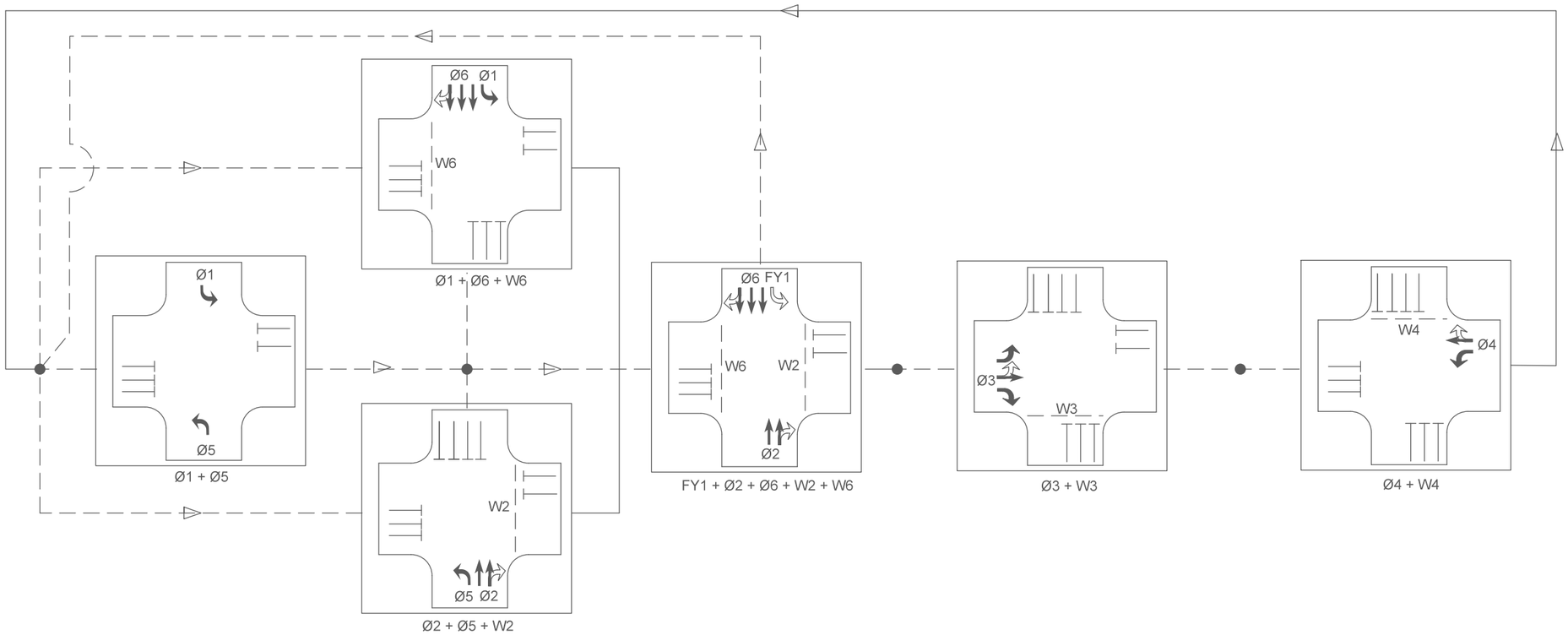

Ø1 - SB LEFT (TRANSIT RD, RTE. 78)
Ø2 - NB THROUGH/RIGHT (TRANSIT RD, RTE. 78)
Ø3 - EB THROUGH/RIGHT/LEFT (I-90 EXIT RD)
Ø4 - WB THROUGH/RIGHT/LEFT (RUSSELLS DRIVEWAY)
Ø5 - NB LEFT (TRANSIT RD, RTE. 78)
Ø6 - SB THROUGH/RIGHT (TRANSIT RD, RTE. 78)

FY1 - OVLP 1 (Ø1) - SB LEFT (TRANSIT RD, RTE. 78)

W2 - EB APPROACH PEDESTRIAN CROSSING
W4 - SB APPROACH PEDESTRIAN CROSSING
W6 - WB APPROACH PEDESTRIAN CROSSING
W3 - NB APPROACH PEDESTRIAN CROSSING

2/3/2020

PROJECT MANAGER S. S. VAIDYA
CHECK BRIAN C. DANKERT
DRAFTING KEITH A. GORECKI
CHECK BRIAN C. DANKERT
DESIGN KEITH A. GORECKI
JOB MANAGER R. F. SCHALLER
DESIGN SUPERVISOR S. S. VAIDYA

FILE NAME = 581361_CPH_TSP_L0C03_4.dgn
DATE/TIME = 22-JUN-2021 14:15
USER = kgorecki

AFFIX SEAL: BRIAN C. DANKERT, P.E.
ON: 22-JUN-2021 14:15

ALTERED BY:
ON:

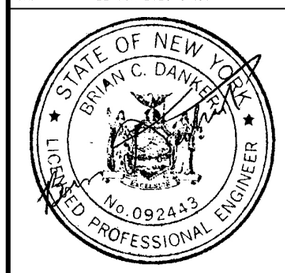

AS-BUILT REVISIONS
DESCRIPTION OF ALTERATIONS:

NY 78, TRANSIT ROAD, S.H. 1334A-1
FRENCH ROAD TO WEHRLE DRIVE
TOWNS OF CHEEKTOWAGA & LANCASTER
VILLAGE OF DEPEW
COUNTY: ERIE REGION: 05

PIN 5813.61
NY 78
UTILITY QUALITY LEVEL D

BRIDGES

CULVERTS

ALL DIMENSIONS IN ft UNLESS OTHERWISE NOTED

TRAFFIC SIGNAL #310 (ERIE) PLAN

CONTRACT NUMBER
D264571

DRAWING NO. TSP-15
SHEET NO. 177

IT IS A VIOLATION OF LAW FOR ANY PERSON, UNLESS THEY ARE ACTING UNDER THE DIRECTION OF A LICENSED PROFESSIONAL ENGINEER, ARCHITECT, LANDSCAPE ARCHITECT, OR LAND SURVEYOR, TO ALTER AN ITEM IN ANY WAY. IF AN ITEM BEARING THE STAMP OF A LICENSED PROFESSIONAL IS ALTERED, THE ALTERING ENGINEER, ARCHITECT, LANDSCAPE ARCHITECT, OR LAND SURVEYOR SHALL STAMP THE DOCUMENT AND INCLUDE THE NOTATION "ALTERED BY" FOLLOWED BY THEIR SIGNATURE, THE DATE OF SUCH ALTERATION, AND A SPECIFIC DESCRIPTION OF THE ALTERATION.

NEW YORK STATE OF OPPORTUNITY. Department of Transportation

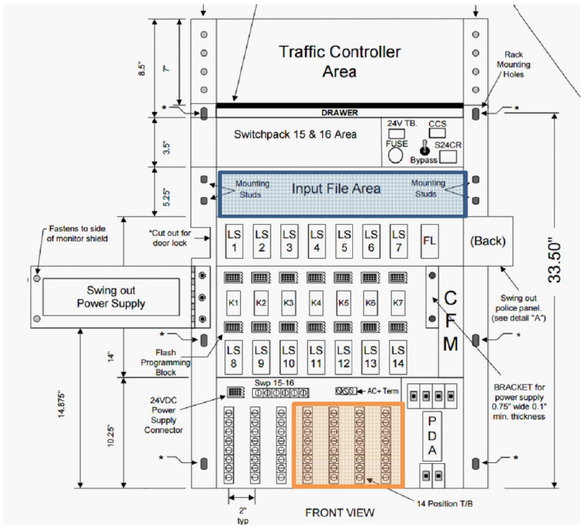

KEY FOR WIRE COLOR CODE

14 / 7C - 1 - R / B

XX / XXC - X - X / X

- AWG
- NUMBER OF CONDUCTORS
- CABLE NO. FOR THE GIVEN CONDUCTOR SIZE
- COLOR OF WIRE
- TRACER COLOR

COLOR

R-RED, O-ORANGE, G-GREEN, BL-BLUE, W-WHITE, B-BLACK

TYPE:
222 Dual Loop Vehicle Detector Module
232 Dual Magnetic Detector Amplifier Module
242 Dual Isolation Module (DC)
252 Dual Isolation Module (AC)

LOOP DETECTOR DATA TABLE

NO.	SIZE	NO. TURNS	WIRED	FUNCTION	206.03050005	680.53080305	680.54	680.72
					(FT)	(FT)	(FT)	(FT)
13	6 x 6	4	PULSE	TRANSIT ROAD SB	6	6	115	190
14	6 x 6	4	PULSE	TRANSIT ROAD SB	6	6	90	165
15	6 x 6	4	PULSE	TRANSIT ROAD SB	6	6	65	140
16	6 x 6	4	PULSE	TRANSIT ROAD SB	6	6	40	115
17	6 x 6	4	PULSE	TRANSIT ROAD SB	6	6	90	165
18	6 x 6	4	PULSE	TRANSIT ROAD SB	6	6	65	140
19	6 x 6	4	PULSE	TRANSIT ROAD SB	6	6	40	115
20	6 x 6	4	PULSE	TRANSIT ROAD NB	6	6	90	165
21	6 x 6	4	PULSE	TRANSIT ROAD NB	6	6	65	140
22	6 x 6	4	PULSE	TRANSIT ROAD NB	6	6	40	115
23	6 x 6	4	PULSE	TRANSIT ROAD NB	6	6	90	165
24	6 x 6	4	PULSE	TRANSIT ROAD NB	6	6	65	140
25	6 x 6	4	PULSE	TRANSIT ROAD NB	6	6	40	115
				TOTALS	78 FT	78 FT	895 FT	1870 FT

STOP BAR DETECTION ACCOMPLISHED BY 360 DEGREE CAMERA.

SIGNAL OPERATIONS SPECIFICATIONS — DATE: 2/16/2021

TABLE OF INPUT WIRING

SIGNAL NUMBER		3310		COUNTY:		Erie		INTERSECTION	Rt 78 (Transit Rd) @ I-90 Exit Ramp		
INPUT FILE AREA		FUNCTION		DETECTOR LOCATION ID (PER PLAN)				TERMINAL WIRING BOARD			
SLOT	TYPE	(Φ#/PED #)	DESCRIPTION					TERMINAL	WIRE COLOR CODE			
1 - TOP	Video Card	Video Card	360 Degrtee Camera	Stop Bar Detectors				1A	AS PER SUPPLIER			
								1B	AS PER SUPPLIER			
1 - BOTTOM		Video Card						2A				
								2B				
2 - TOP	222	Φ6	SB T Rt 78 Setback	13	14	15	16	3A	SLI - 13 - W	SLI - 14 - W	SLI - 15 - W	SLI - 16 - W
								3B	SLI - 13 - B	SLI - 14 - W	SLI - 15 - W	SLI - 16 - W
2 - BOTTOM		Φ6	SB T Rt 78 Setback	17	18	19		4A	SLI - 17 - W	SLI - 18 - W	SLI - 19 - W	
								4B	SLI - 17 - B	SLI - 18 - W	SLI - 19 - W	
3 - TOP	222	Φ2	NB T Rt 78 Setback	20	21	22		5A	SLI - 20 - W	SLI - 21 - W	SLI - 22 - W	
								5B	SLI - 20 - B	SLI - 21 - W	SLI - 22 - W	
3 - BOTTOM		Φ2	NB T Rt 78 Setback	23	24	25		6A	SLI - 23 - W	SLI - 24 - W	SLI - 25 - W	
								6B	SLI - 23 - B	SLI - 24 - W	SLI - 25 - W	
4 - TOP								7A				
								7B				
4 - BOTTOM								8A				
								8B				
5 - TOP								9A				
								9B				
5 - BOTTOM								10A				
								10B				
6 - TOP								11A				
								11B				
6 - BOTTOM								12A				
								12B				
7 - TOP								13A				
								13B				
7 - BOTTOM								14A				
								14B				
8 - TOP								15A				
								15B				
8 - BOTTOM								16A				
								16B				
9 - TOP								17A				
								17B				
9 - BOTTOM								18A				
								18B				
10 - TOP								19A				
								19B				
10 - BOTTOM								20A				
								20B				
11 - TOP								21A				
								21B				
11 - BOTTOM								22A				
								22B				
12 - TOP								23A				
								23B				
12 - BOTTOM								24A				
								24B				
13 - TOP	242	Φ2 Ped	Crossing Wb Russells Drwy	W2/1	W2/2			25A	14/5C-W2/1-O	14/5C-W2/2-O		
								25B	14/5C-W2/1-B	14/5C-W2/2-B		
13 - BOTTOM		Φ4 Ped	Crossing Nb Rt 78	W4/1	W4/2			26A	14/5C-W4/1-O	14/5C-W4/2-O		
								26B	14/5C-W4/1-B	14/5C-W4/2-B		
14 - TOP	242	Φ6 Ped	Crossing Eb I-90 Exit Ramp	W6/1	W6/2			27A	14/5C-W6/1-O	14/5C-W6/2-O		
								27B	14/5C-W6/1-B	14/5C-W6/2-B		
14 - BOTTOM		Φ3 Ped	Crossing Sb Rt 78	W3/1	W3/2			28A	14/5C-W3/1-O	14/5C-W3/2-O		
								28B	14/5C-W3/1-B	14/5C-W3/2-B		

AFFIX SEAL: BRIAN C. DANKERT, P.E.
ON: 22-JUN-2021 14:15

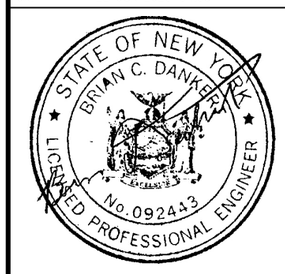

ALTERED BY:
ON:

AS-BUILT REVISIONS
DESCRIPTION OF ALTERATIONS:

NY 78, TRANSIT ROAD, S.H. 1334A-1
FRENCH ROAD TO WEHRLE DRIVE
TOWNS OF CHEEKTOWAGA & LANCASTER
VILLAGE OF DEPEW
COUNTY: ERIE REGION: 05

PIN 5813.61
NY 78
UTILITY QUALITY LEVEL D

BRIDGES

CULVERTS

ALL DIMENSIONS IN ft UNLESS OTHERWISE NOTED

TRAFFIC SIGNAL #310 (ERIE) PLAN

CONTRACT NUMBER D264571

DRAWING NO. TSP-16
SHEET NO. 178

IT IS A VIOLATION OF LAW FOR ANY PERSON, UNLESS THEY ARE ACTING UNDER THE DIRECTION OF A LICENSED PROFESSIONAL ENGINEER, ARCHITECT, LANDSCAPE ARCHITECT, OR LAND SURVEYOR, TO ALTER AN ITEM IN ANY WAY. IF AN ITEM BEARING THE STAMP OF A LICENSED PROFESSIONAL IS ALTERED, THE ALTERING ENGINEER, ARCHITECT, LANDSCAPE ARCHITECT, OR LAND SURVEYOR SHALL STAMP THE DOCUMENT AND INCLUDE THE NOTATION "ALTERED BY" FOLLOWED BY THEIR SIGNATURE, THE DATE OF SUCH ALTERATION, AND A SPECIFIC DESCRIPTION OF THE ALTERATION.

NEW YORK STATE OF OPPORTUNITY. Department of Transportation

DESIGN SUPERVISOR S. S. VAIDYA
JOB MANAGER R. F. SCHALLER
DESIGN KEITH A. GORECKI
CHECK BRIAN C. DANKERT
DRAFTING KEITH A. GORECKI
CHECK BRIAN C. DANKERT
PROJECT MANAGER S. S. VAIDYA

FILE NAME = 581361_CPH_TSP_L0C03_5.dgn
DATE/TIME = 22-JUN-2021 14:15
USER = kgorecki

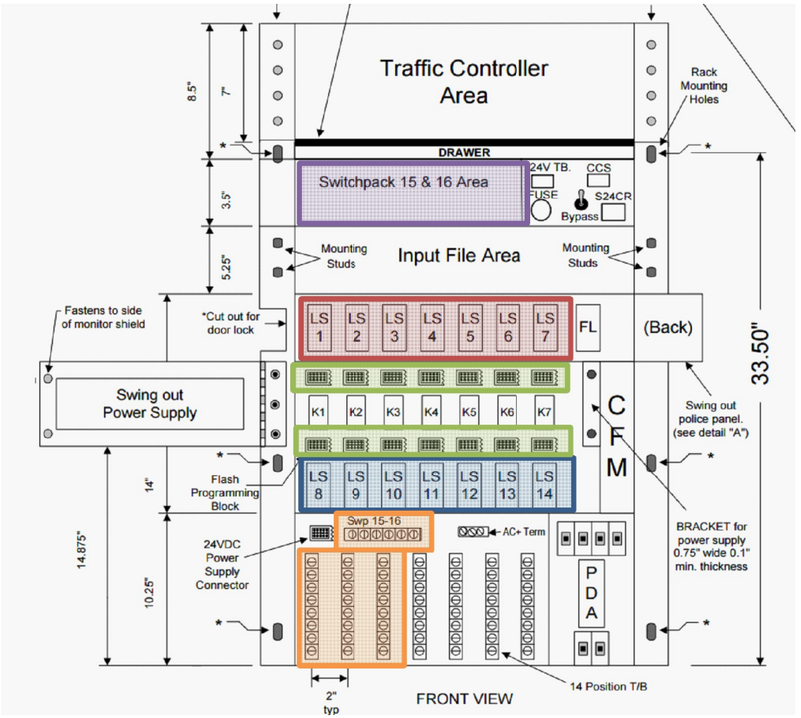

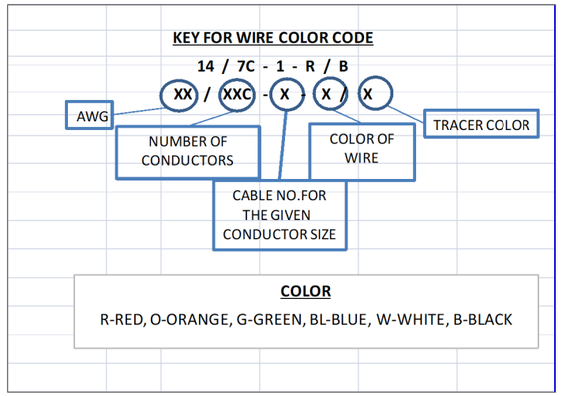

LEGEND

INDICATIONS					
G	= CIRCULAR GREEN	Y	= CIRCULAR YELLOW	R	= CIRCULAR RED
← G	= LEFT GREEN ARROW	← Y	= LEFT YELLOW ARROW	← R	= LEFT RED ARROW
G →	= RIGHT GREEN ARROW	Y →	= RIGHT YELLOW ARROW	R →	= RIGHT RED ARROW
↑ G	= VERT. GREEN ARROW	← FY	= FLASHING YELLOW ARROW	WALK	=HAND/MAN
				DON'T WALK	=FLASHING HAD/COUNT DOWN TIMER
FLASH PLUG					
W	=DARK				
R	=FLASH RED				

SIGNAL OPERATIONS SPECIFICATIONS 2/16/2021

TABLE OF SWITCH PACKS

	SIGNAL NUMBER		3310				COUNTY	Erie	INTERSECTION		Rt 78 (Transit Rd) @ I-90 Exit Ramp		
	SWITCH PACK	FUNCTION (Φ#/OVLP)	FACE NUMBERS				FLASH PLUG	INDICATIONS	TERMINAL WIRING BOARD				
									TERMINAL	WIRE COLOR CODE PER FACE			
TOP ROW (LS1-LS7)	SP 1	OvLap 1 FYA SB RT 78	1				R	← R	SP 1R	14/7C-1-R			
								← Y	SP 1Y	14/7C-1-Y			
								← G	SP 1G	14/7C-1-G			
								GND. BAR	GND. BUS	14/7C-1-W			
	SP 2	Φ2 NB RT 78	6	7			R	R	SP 2R	14/5C-6-R	14/5C-7-R		
								Y	SP 2Y	14/5C-6-Y	14/5C-7-Y		
								G	SP 2G	14/5C-6-G	14/5C-7-G		
								GND. WIRE	GND. BUS	14/5C-6-W	14/5C-7-W		
	SP 3	Φ3 RUSSELLS DRWY	8	9			R	R	SP 3R	14/5C-8-R	14/5C-9-R		
								Y	SP 3Y	14/5C-8-Y	14/5C-9-Y		
								G	SP 3G	14/5C-8-G	14/5C-9-G		
								GND. WIRE	GND. BUS	14/5C-8-W	14/5C-9-W		
	SP 4	Φ4 I-90 EXIT RAMP	10	11	12		R	R	SP 4R	14/5C-10-R	14/5C-11-R	14/5C-12-R	
								Y	SP 4Y	14/5C-10-Y	14/5C-11-Y	14/5C-12-Y	
								G	SP 4G	14/5C-10-G	14/5C-11-G	14/5C-12-G	
								GND. WIRE	GND. BUS	14/5C-10-W	14/5C-11-W	14/5C-12-W	
	SP 5	Φ5 NB RT 78	5				R	← R	SP 5R	14/7C-5-R			
								← Y	SP 5Y	14/7C-5-Y			
								← G	SP 5G	14/7C-5-G			
								GND. WIRE	GND. BUS	14/7C-5-W			
	SP 6	Φ6 SB RT 78	2	3	4		R	R	SP 6R	14/5C-2-R	14/5C-3-R	14/5C-4-R	
								Y	SP 6Y	14/5C-2-Y	14/5C-3-Y	14/5C-4-Y	
								G	SP 6G	14/5C-2-G	14/5C-3-G	14/5C-4-G	
								GND. WIRE	GND. BUS	14/5C-2-W	14/5C-3-W	14/5C-4-W	
	SP 7								SP 7R				
									SP 7Y				
									SP 7G				
								GND. WIRE	GND. BUS				
BOTTOM ROW (LS8-LS14)	SP 8								SP 8R				
									SP 8Y				
									SP 8G				
								GND. WIRE	GND. BUS				
	SP 9								SP 9R				
									SP 9Y				
									SP 9G				
								GND. WIRE	GND. BUS				
	SP 10								SP 10R				
									SP 10Y				
									SP 10G				
								GND. WIRE	GND. BUS				
	SP 11								SP 11R				
									SP 11Y				
									SP 11G				
								GND. WIRE	GND. BUS				
	SP 12								SP 12R				
									SP 12Y				
									SP 12G				
								GND. WIRE	GND. BUS				
	SP 13	Φ2 Ped w/FYA Crossing WB RUSSELLS DRWY	W2	W2			W	DON'T WALK	SP 13R	14/7C-W2-R	14/7C-W2-R		
								← FY	SP 13Y	14/7C-1-BL			
								WALK	SP 13G	14/7C-W2-G	14/7C-W2-G		
								GND. WIRE	GND. BUS	14/7C-W2-W	14/7C-W2-W		
	SP 14	Φ4 Ped Crossing NB RT 78	W4	W4			W	DON'T WALK	SP 14R	14/5C-W4-R	14/5C-W4-R		
									SP 14Y				
								WALK	SP 14G	14/5C-W4-G	14/5C-W4-G		
								GND. WIRE	GND. BUS	14/5C-W4-W	14/5C-W4-W		
SPECIAL	SP 15	Φ6 Ped Crossing EB I-90 EXIT RAMP	W6	W6			W	DON'T WALK	SP 15R	14/5C-W6-R	14/5C-W6-R		
									SP 15Y				
								WALK	SP 15G	14/5C-W6-G	14/5C-W6-G		
								GND. WIRE	GND. BUS	14/5C-W6-W	14/5C-W6-W		
	SP 16	Φ3 Ped Crossing SB RT 78	W3	W3			W	DON'T WALK	SP 16R	14/5C-W3-R	14/5C-W3-R		
									SP 16Y				
								WALK	SP 16G	14/5C-W3-G	14/5C-W3-G		
								GND. WIRE	GND. BUS	14/5C-W3-W	14/5C-W3-W		

AFFIX SEAL: BRIAN C. DANKERT, P.E.
ON: 22-JUN-2021 14:15

ALTERED BY:
ON:

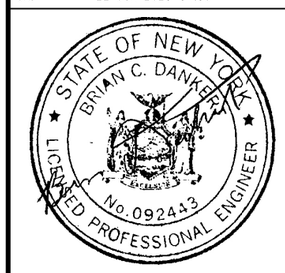

AS-BUILT REVISIONS
DESCRIPTION OF ALTERATIONS:

NY 78, TRANSIT ROAD, S.H. 1334A-1
FRENCH ROAD TO WEHRLE DRIVE
TOWNS OF CHEEKTOWAGA & LANCASTER
VILLAGE OF DEPEW
COUNTY: ERIE REGION: 05

PIN 5813.61
NY 78
UTILITY QUALITY LEVEL D

BRIDGES

CULVERTS

ALL DIMENSIONS IN ft UNLESS OTHERWISE NOTED

TRAFFIC SIGNAL *310 (ERIE) PLAN

CONTRACT NUMBER D264571

DRAWING NO. TSP-17
SHEET NO. 179

IT IS A VIOLATION OF LAW FOR ANY PERSON, UNLESS THEY ARE ACTING UNDER THE DIRECTION OF A LICENSED PROFESSIONAL ENGINEER, ARCHITECT, LANDSCAPE ARCHITECT, OR LAND SURVEYOR, TO ALTER AN ITEM IN ANY WAY. IF AN ITEM BEARING THE STAMP OF A LICENSED PROFESSIONAL IS ALTERED, THE ALTERING ENGINEER, ARCHITECT, LANDSCAPE ARCHITECT, OR LAND SURVEYOR SHALL STAMP THE DOCUMENT AND INCLUDE THE NOTATION "ALTERED BY" FOLLOWED BY THEIR SIGNATURE, THE DATE OF SUCH ALTERATION, AND A SPECIFIC DESCRIPTION OF THE ALTERATION.

NEW YORK STATE OF OPPORTUNITY. Department of Transportation

DESIGN SUPERVISOR S. S. VAIDYA
JOB MANAGER R. F. SCHALLER
DESIGN KEITH A. GORECKI
CHECK BRIAN C. DANKERT
DRAFTING KEITH A. GORECKI
CHECK BRIAN C. DANKERT
PROJECT MANAGER S. S. VAIDYA

FILE NAME = 581361_CPH_TSP_L0C03_6.dgn
DATE/TIME = 22-JUN-2021 14:15
USER = kgorecki

NYSDOT SIGNAL #492A (ERIE)
NY ROUTE 78 (TRANSIT ROAD) AT AERO DRIVE

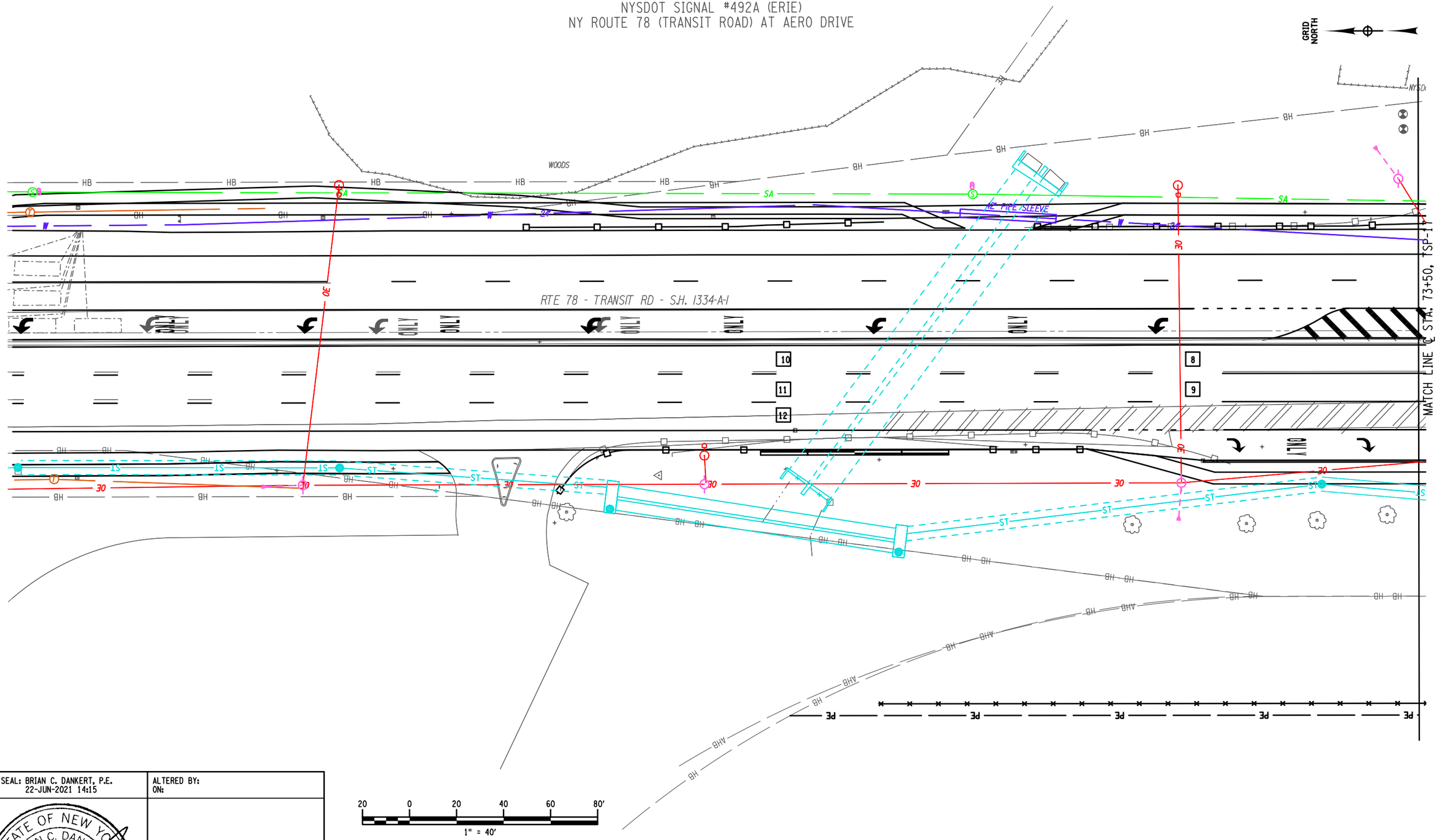

20 0 20 40 60 80'
1" = 40'

AFFIX SEAL: BRIAN C. DANKERT, P.E. ON: 22-JUN-2021 14:15	ALTERED BY: ON:				

STATE OF NEW YORK · BRIAN C. DANKERT · No. 092443 · LICENSED PROFESSIONAL ENGINEER

AS-BUILT REVISIONS DESCRIPTION OF ALTERATIONS:	NY 78, TRANSIT ROAD, S.H. 1334A-1 FRENCH ROAD TO WEHRLE DRIVE TOWNS OF CHEEKTOWAGA & LANCASTER VILLAGE OF DEPEW COUNTY: ERIE REGION: 05	PIN 5813.61 NY 78 UTILITY QUALITY LEVEL D	BRIDGES	CULVERTS	ALL DIMENSIONS IN ft UNLESS OTHERWISE NOTED TRAFFIC SIGNAL #492 (ERIE) PLAN

CONTRACT NUMBER D264571
DRAWING NO. TSP-18
SHEET NO. 180

IT IS A VIOLATION OF LAW FOR ANY PERSON, UNLESS THEY ARE ACTING UNDER THE DIRECTION OF A LICENSED PROFESSIONAL ENGINEER, ARCHITECT, LANDSCAPE ARCHITECT, OR LAND SURVEYOR, TO ALTER AN ITEM IN ANY WAY. IF AN ITEM BEARING THE STAMP OF A LICENSED PROFESSIONAL IS ALTERED, THE ALTERING ENGINEER, ARCHITECT, LANDSCAPE ARCHITECT, OR LAND SURVEYOR SHALL STAMP THE DOCUMENT AND INCLUDE THE NOTATION "ALTERED BY" FOLLOWED BY THEIR SIGNATURE, THE DATE OF SUCH ALTERATION, AND A SPECIFIC DESCRIPTION OF THE ALTERATION.

NEW YORK STATE OF OPPORTUNITY. Department of Transportation

PROJECT MANAGER S. S. VAIDYA
CHECK BRIAN C. DANKERT
DRAFTING KEITH A. GORECKI
CHECK BRIAN C. DANKERT
DESIGN KEITH A. GORECKI
JOB MANAGER R. F. SCHALLER
DESIGN SUPERVISOR S. S. VAIDYA

FILE NAME = 581361_CPH_TSP_L0004_1.dgn
DATE/TIME = 22-JUN-2021 14:15
USER = kgorecki

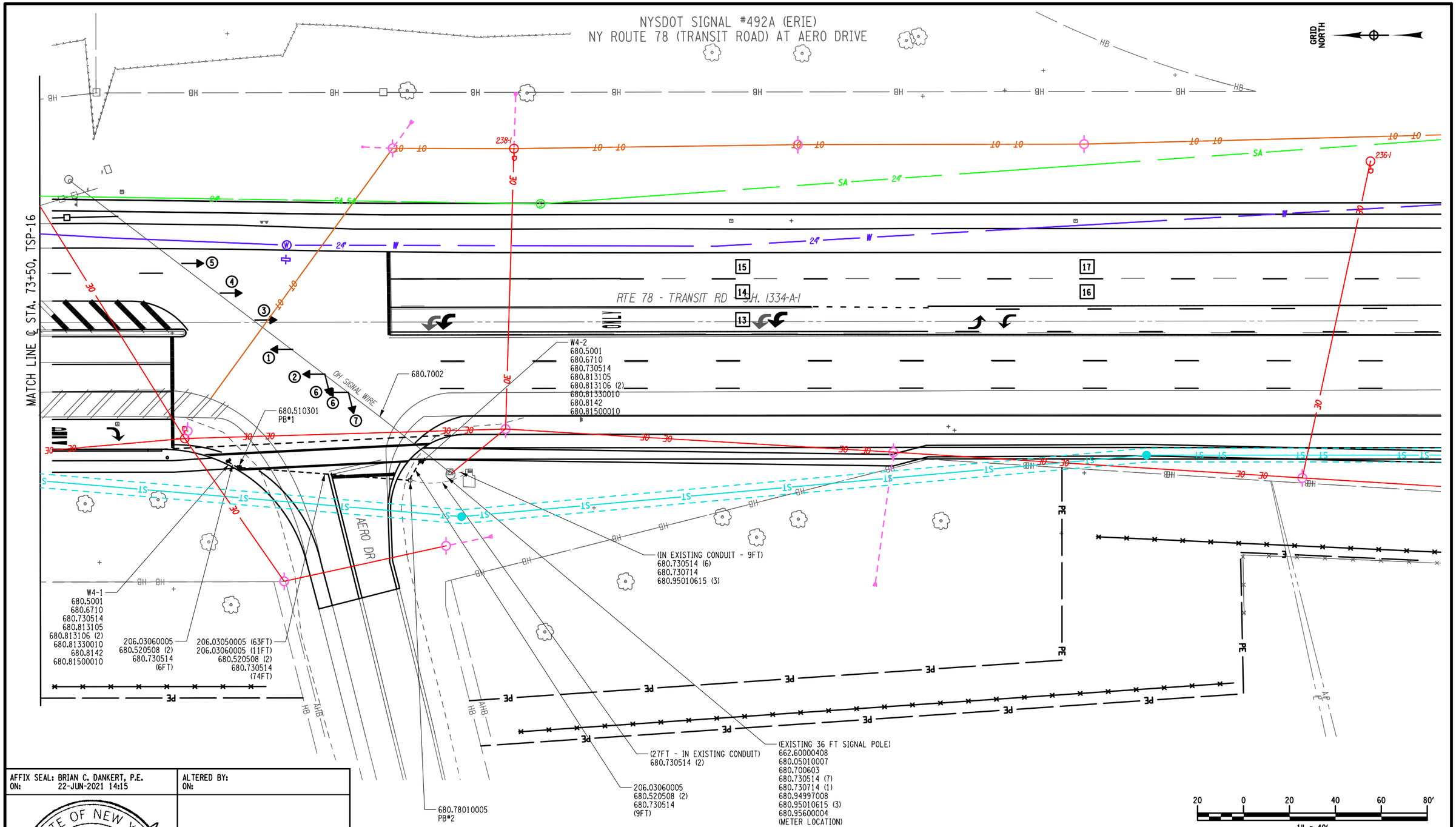

PROJECT MANAGER S. S. VAIDYA
CHECK BRIAN C. DANKERT
DRAFTING KEITH A. GORECKI
CHECK BRIAN C. DANKERT
DESIGN KEITH A. GORECKI
JOB MANAGER R. F. SCHALLER
DESIGN SUPERVISOR S. S. VAIDYA

FILE NAME = 581361_CPH_TSP_LOC04_2.dgn
DATE/TIME = 22-JUN-2021 14:15
USER = kgorecki

AFFIX SEAL: BRIAN C. DANKERT, P.E.
ON: 22-JUN-2021 14:15

ALTERED BY:
ON:

STATE OF NEW YORK
BRIAN C. DANKERT
No. 092443
LICENSED PROFESSIONAL ENGINEER

AS-BUILT REVISIONS
DESCRIPTION OF ALTERATIONS:

NY 78, TRANSIT ROAD, S.H. 1334A-1
FRENCH ROAD TO WEHRLE DRIVE
TOWNS OF CHEEKTOWAGA & LANCASTER
VILLAGE OF DEPEW
COUNTY: ERIE REGION: 05

PIN 5813.61
NY 78
UTILITY QUALITY LEVEL D

BRIDGES

CULVERTS

ALL DIMENSIONS IN ft UNLESS OTHERWISE NOTED

TRAFFIC SIGNAL #492 (ERIE) PLAN

CONTRACT NUMBER
D264571

DRAWING NO. TSP-19
SHEET NO. 181

IT IS A VIOLATION OF LAW FOR ANY PERSON, UNLESS THEY ARE ACTING UNDER THE DIRECTION OF A LICENSED PROFESSIONAL ENGINEER, ARCHITECT, LANDSCAPE ARCHITECT, OR LAND SURVEYOR, TO ALTER AN ITEM IN ANY WAY. IF AN ITEM BEARING THE STAMP OF A LICENSED PROFESSIONAL IS ALTERED, THE ALTERING ENGINEER, ARCHITECT, LANDSCAPE ARCHITECT, OR LAND SURVEYOR SHALL STAMP THE DOCUMENT AND INCLUDE THE NOTATION "ALTERED BY" FOLLOWED BY THEIR SIGNATURE, THE DATE OF SUCH ALTERATION, AND A SPECIFIC DESCRIPTION OF THE ALTERATION.

NEW YORK STATE OF OPPORTUNITY. Department of Transportation

NYSDOT TRAFFIC SIGNAL #492A (ERIE)
NY ROUTE 78 (TRANSIT ROAD) AT AERO DRIVE

QUANTITY AND ITEM LIST

SIGNAL #492A (ERIE) - NY ROUTE 78 (TRANSIT ROAD) AT AERO DRIVE

ITEM NO.	DESCRIPTION	UNIT	QTY
206.03050005	CONDUIT EXCAV & BACKFILL (IN ROADWAY)	FT	123
206.03060005	CONDUIT EXCAV & BACKFILL (NOT IN ROADWAY)	FT	26
619.1611	MAINTAIN TRAFFIC SIGNAL EQUIPMENT (REQ A)	MO	8
662.60000408	FURNISHING ELECTRICAL SERVICE	DC	1
680.05010007	360 DEGREE CAMERA VIDEO DETECTION SYSTEM	EA	1
680.5001	POLE EXCAVATION AND CONCRETE FOUNDATION	CY	1
680.510301	PULLBOX-CIRCULAR, 24" IN DIA., REINFORCED CONCRETE	EA	1
680.520508	CONDUIT, RIGID PLASTIC, CLASS 1 , 3 NPS	FT	178
680.53080305	CONDUIT, FLEX-TIGHT NON-METAL, 1NPS	FT	60
680.54	INDUCTANCE LOOP INSTALLATION	FT	600
680.6710	SIGNAL POLE-POST TOP MOUNT 10' MTD HEIGHT	EA	2
680.7002	DUAL SPAN WIRE ASSEMBLY / UPPER TETHER	EA	1
680.700603	RISER ASSEMBLY, 1" DIA.	EA	1
680.72	INDUCTANCE LOOP WIRE	FT	1350
680.730514	SIGNAL CABLE, 5 CONDUCTOR, 14 AWG	FT	1223
680.730714	SIGNAL CABLE, 7 CONDUCTOR, 14 AWG	FT	186
680.77000405	MODIFY TRAFFIC SIGNAL INSTALLATION, LOCATION 4	ELOC	1
680.78010005	ALTER EXISTING PULLBOX FOR CONDUITS	EA	1
680.79000405	REMOVE TRAFFIC SIGNAL INSTALLATION, LOCATION 4	ELOC	1
680.810101	SIGNAL MODULE - 12 IN, RED BALL LED	EA	7
680.810102	SIGNAL MODULE - 12 IN, RED ARROW LED	EA	1
680.810103	SIGNAL MODULE - 12 IN, YELLOW BALL LED	EA	7
680.810104	SIGNAL MODULE - 12 IN, YELLOW ARROW LED	EA	2
680.810105	SIGNAL MODULE - 12 IN, GREEN BALL LED	EA	7
680.810106	SIGNAL MODULE - 12 IN, GREEN ARROW LED	EA	1
680.810601	SIGNAL SECTION, POLYCARBONITE, TYPE 1, 12IN	EA	25
680.8111	TRAFFIC SIGNAL BRACKET ASSEMBLY - 1 WAY	EA	4
680.8112	TRAFFIC SIGNAL BRACKET ASSEMBLY - 2 WAY	EA	2
680.813105	PEDESTRIAN SIGNAL MODULE 12IN, BI-MODAL HAND/MAN	EA	2
680.813106	PEDESTRIAN SIGNAL SECTION - POLYCARBONITE, TYPE 1, 12IN.	EA	4
680.81330010	AUDIBLE PEDESTRIAN SIGNAL	EA	2
680.8142	PEDESTRIAN SIGNAL TOP MOUNT ASSEMBLY	EA	2
680.81500010	PEDESTRIAN COUNT DOWN TIMER	EA	2
680.81990003	TRAFFIC SIGNAL HEAD BACKPLATES WITH YELLOW STRIPES	EA	8
680.94997008	F AND I ELECTRICAL DISCONNECT GEN. TRAN SWITCH	EA	1
680.95010615	SERVICE CABLE, 1 CONDUCTOR, 6 AWG	FT	135
680.95600004	ELECTRICAL METER PAN	EA	1

1.) EXISTING PULLBOX LOCATIONS ON PLANS ARE SHOWN BASED ON RECORD PLANS. ACTUAL FIELD LOCATIONS MAY VARY.

2.) ITEM 680.77000405, "MODIFY TRAFFIC SIGNAL INSTALLATION, LOCATION 4" SHALL INCLUDE THE REQUIRED MODIFICATIONS TO THE EXISTING WIRING WITHIN THE SIGNAL CABINETS TO MATCH THE PROPOSED INPUT WIRING AND SWITCHPACKS FOUND IN THE PLANS.

3.) ITEM 680.79000405, "REMOVE TRAFFIC SIGNAL INSTALLATION, LOCATION 4" SHALL INCLUDE THE REMOVAL OF THE EXISTING TRAFFIC SIGNAL EQUIPMENT LISTED BELOW. ALL EQUIPMENT LISTED SHALL BE DISPOSED OF AND ONLY LED SERIAL NUMBERS SHALL BE RECORDED AND GIVEN TO NYSDOT TRAFFIC SIGNAL MAINTENANCE CREW.

- EXISTING RISER ASSEMBLY
- EXISTING DISCONNECT
- EXISTING ELECTRICAL SERVICE
- EXISITNG METER PAN
- EXISTING SIGNAL HEADS AND SIGNAL CONDUCTOR WIRING
- EXISTING SPAN WIRE ASSEMBLY

SIGNAL HEAD DATA TABLE

FACE \ ITEM	680.810101	680.810102	680.810103	680.810104	680.810105	680.810106	680.810601	680.8111	680.8112	680.81990003
1	1	-	1	-	1	-	3	1	-	1
2	1	-	1	-	1	-	3	-	1	1
7	1	-	1	-	1	-	3	-		1
4	-	1	-	2	-	1	4	1	-	1
5	1	-	1	-	1	-	3	1	-	1
6	1	-	1	-	1	-	3	1	-	1
3	1	-	1	-	1	-	3	-	1	1
8	1	-	1	-	1	-	3	-		1
TOTALS	**7 EA**	**1 EA**	**7 EA**	**2 EA**	**7 EA**	**1 EA**	**25 EA**	**4 EA**	**2 EA**	**8 EA**

TRAFFIC SIGNAL #492A (ERIE)			
POWER SUPPLIER:			
EXISTING METER #:		NEW METER #:	
EXISTING ACCOUNT #:		NEW ACCOUNT #	
BILLING TO:			

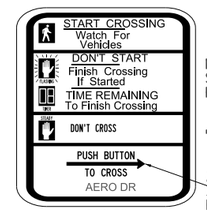

R10-3i

NEW PEDESTRIAN SIGNS SHALL BE SIGN NUMBER R10-3i FROM THE MUTCD.

"AERO DR" FOR W4-1 AND W4-2

ARROW MAY FACE LEFT OR RIGHT, IT IS CONTRACTORS RESPONSIBILITY FOR PROPER ARROW ORIENTATION.

AUDIBLE WIRING NOTE:

THE COST TO FURNISH AND INSTALL WIRING BETWEEN THE AUDIBLE PEDESTRIAN SIGNAL (APS) UNITS AND THEIR RESPECTIVE CONTROL UNITS MOUNTED IN THE PED. HEADS SHALL BE INCLUDED UNDER PROVISIONS OF ITEM 680.81330010.

THE MANUFACTURER'S SUGGESTED CABLES FOR USE WITH AUDIBLE PEDESTRIAN SIGNAL UNITS ARE BELDEN 8489 FOR ABOVE GROUND.

BELDEN 8489, OR EQUIVALENT, SHALL BE USED WITH 680.81330010.

REFER TO "EZCOMMUNICATOR 4 WIRE NAVIGATOR APS SYSTEM INSTALLATION MANUAL" FOR MANUFACTURER'S INSTALLATION DETAILS AND PROCEDURES.

AFFIX SEAL: BRIAN C. DANKERT, P.E.
ON: 22-JUN-2021 14:15

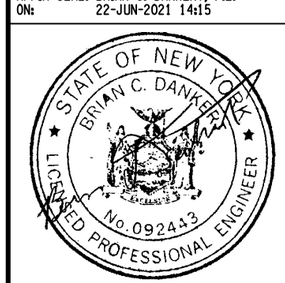

ALTERED BY:
ON:

AS-BUILT REVISIONS
DESCRIPTION OF ALTERATIONS:

NY 78, TRANSIT ROAD, S.H. 1334A-1
FRENCH ROAD TO WEHRLE DRIVE
TOWNS OF CHEEKTOWAGA & LANCASTER
VILLAGE OF DEPEW
COUNTY: ERIE REGION: 05

PIN 5813.61
NY 78
UTILITY QUALITY LEVEL D

BRIDGES

CULVERTS

ALL DIMENSIONS IN ft UNLESS OTHERWISE NOTED

TRAFFIC SIGNAL #492 (ERIE) PLAN

CONTRACT NUMBER
D264571

DRAWING NO. TSP-20
SHEET NO. 182

IT IS A VIOLATION OF LAW FOR ANY PERSON, UNLESS THEY ARE ACTING UNDER THE DIRECTION OF A LICENSED PROFESSIONAL ENGINEER, ARCHITECT, LANDSCAPE ARCHITECT, OR LAND SURVEYOR, TO ALTER AN ITEM IN ANY WAY. IF AN ITEM BEARING THE STAMP OF A LICENSED PROFESSIONAL IS ALTERED, THE ALTERING ENGINEER, ARCHITECT, LANDSCAPE ARCHITECT, OR LAND SURVEYOR SHALL STAMP THE DOCUMENT AND INCLUDE THE NOTATION "ALTERED BY" FOLLOWED BY THEIR SIGNATURE, THE DATE OF SUCH ALTERATION, AND A SPECIFIC DESCRIPTION OF THE ALTERATION.

NEW YORK STATE OF OPPORTUNITY. Department of Transportation

DESIGN SUPERVISOR S. S. VAIDYA
JOB MANAGER R. F. SCHALLER
DESIGN KEITH A. GORECKI
CHECK BRIAN C. DANKERT
DRAFTING KEITH A. GORECKI
CHECK BRIAN C. DANKERT
PROJECT MANAGER S. S. VAIDYA

FILE NAME = 581361.CPH.TSP.LOC04.3.dgn
DATE/TIME = 22-JUN-2021 14:15
USER = kgorecki

NYSDOT TRAFFIC SIGNAL #492A (ERIE)
NY ROUTE 78 (TRANSIT ROAD) AT AERO DRIVE

581361 - NY 78 (TRANSIT RD); FRENCH RD to ELLICOTT CREEK

05-53-492

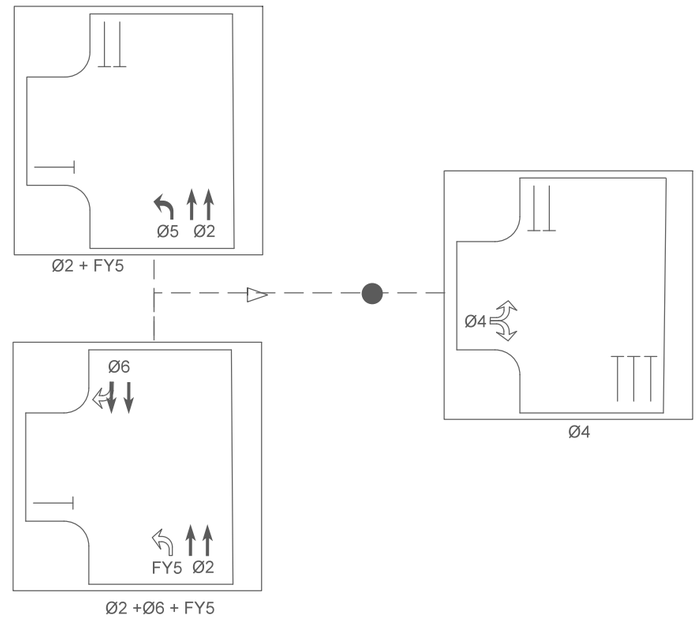

Ø2 - NB THROUGH (TRANSIT RD, RTE. 78)
Ø6 - SB THROUGH/RIGHT (TRANSIT RD, RTE. 78)
Ø4 - EB RIGHT/LEFT (AERO DR)

FLASHING YELLOW ARROW

FY5 - OVLP 5 (Ø5) - NB LEFT (TRANSIT RD, RTE. 78)

2/10/2020

PROJECT MANAGER S. S. VAIDYA
CHECK BRIAN C. DANKERT
DRAFTING KEITH A. GORECKI
CHECK BRIAN C. DANKERT
DESIGN KEITH A. GORECKI
JOB MANAGER R. F. SCHALLER
DESIGN SUPERVISOR S. S. VAIDYA

FILE NAME = 581361_CPH_TSP_LOC04_4.dgn
DATE/TIME = 22-JUN-2021 14:15
USER = kgorecki

AFFIX SEAL: BRIAN C. DANKERT, P.E.
ON: 22-JUN-2021 14:15

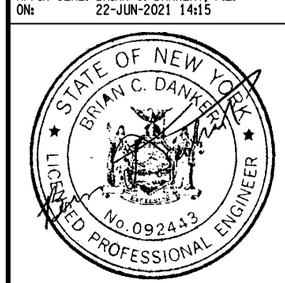

ALTERED BY:
ON:

AS-BUILT REVISIONS
DESCRIPTION OF ALTERATIONS:

NY 78, TRANSIT ROAD, S.H. 1334A-1
FRENCH ROAD TO WEHRLE DRIVE
TOWNS OF CHEEKTOWAGA & LANCASTER
VILLAGE OF DEPEW
COUNTY: ERIE REGION: 05

PIN 5813.61
NY 78
UTILITY QUALITY LEVEL D

BRIDGES

CULVERTS

ALL DIMENSIONS IN ft UNLESS OTHERWISE NOTED

TRAFFIC SIGNAL #492 (ERIE) PLAN

CONTRACT NUMBER
D264571

DRAWING NO. TSP-21
SHEET NO. 183

IT IS A VIOLATION OF LAW FOR ANY PERSON, UNLESS THEY ARE ACTING UNDER THE DIRECTION OF A LICENSED PROFESSIONAL ENGINEER, ARCHITECT, LANDSCAPE ARCHITECT, OR LAND SURVEYOR, TO ALTER AN ITEM IN ANY WAY. IF AN ITEM BEARING THE STAMP OF A LICENSED PROFESSIONAL IS ALTERED, THE ALTERING ENGINEER, ARCHITECT, LANDSCAPE ARCHITECT, OR LAND SURVEYOR SHALL STAMP THE DOCUMENT AND INCLUDE THE NOTATION "ALTERED BY" FOLLOWED BY THEIR SIGNATURE, THE DATE OF SUCH ALTERATION, AND A SPECIFIC DESCRIPTION OF THE ALTERATION.

NEW YORK STATE OF OPPORTUNITY. Department of Transportation

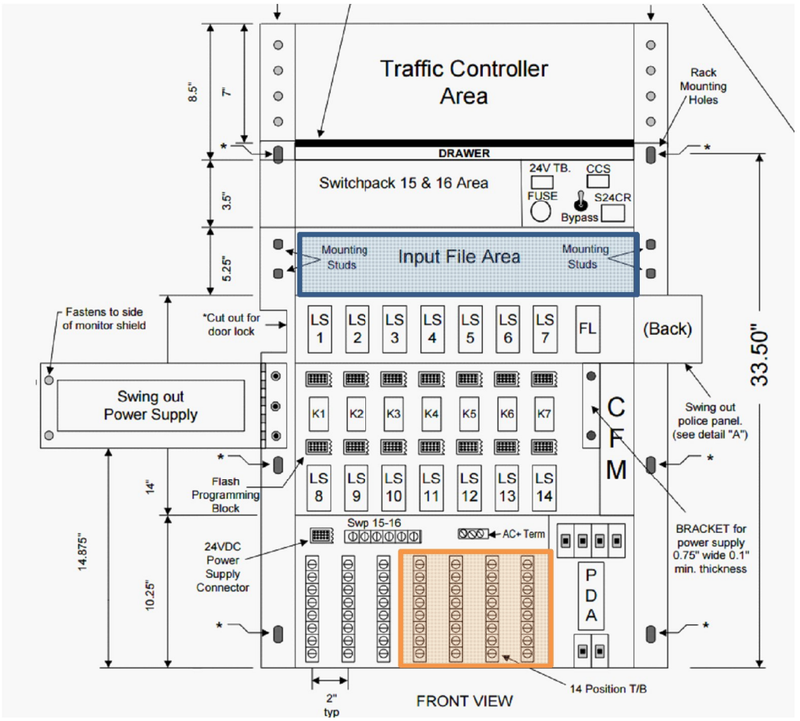

KEY FOR WIRE COLOR CODE

14 / 7C - 1 - R / B

XX / XXC - X - X / X

AWG — NUMBER OF CONDUCTORS — CABLE NO. FOR THE GIVEN CONDUCTOR SIZE — COLOR OF WIRE — TRACER COLOR

COLOR

R-RED, O-ORANGE, G-GREEN, BL-BLUE, W-WHITE, B-BLACK

TYPE:
222 Dual Loop Vehicle Detector Module
232 Dual Magnetic Detector Amplifier Module
242 Dual Isolation Module (DC)
252 Dual Isolation Module (AC)

LOOP DETECTOR DATA TABLE

NO.	SIZE	NO. TURNS	WIRED	FUNCTION	206.03050005 (FT)	680.53080305 (FT)	680.54 (FT)	680.72 (FT)
8	6 x 6	4	PULSE	TRANSIT ROAD SB	6	6	65	140
9	6 x 6	4	PULSE	TRANSIT ROAD SB	6	6	40	115
10	6 x 6	4	PULSE	TRANSIT ROAD SB	6	6	90	165
11	6 x 6	4	PULSE	TRANSIT ROAD SB	6	6	65	140
12	6 x 6	4	PULSE	TRANSIT ROAD SB	6	6	40	115
13	6 x 6	4	PULSE	TRANSIT ROAD NB	6	6	90	165
14	6 x 6	4	PULSE	TRANSIT ROAD NB	6	6	65	140
15	6 x 6	4	PULSE	TRANSIT ROAD NB	6	6	40	115
16	6 x 6	4	PULSE	TRANSIT ROAD NB	6	6	65	140
17	6 x 6	4	PULSE	TRANSIT ROAD NB	6	6	40	115
				TOTALS	60 FT	60 FT	600 FT	1350 FT

STOP BAR DETECTION ACCOMPLISHED BY 360 DEGREE CAMERA.

SIGNAL OPERATIONS SPECIFICATIONS — DATE: 6/4/2021

TABLE OF INPUT WIRING

SIGNAL NUMBER	05-53-492	COUNTY	Erie	INTERSECTION	Rt 78 (Transit Rd) @ Aero Dr

INPUT FILE AREA		FUNCTION		DETECTOR LOCATION ID (PER PLAN)				TERMINAL WIRING BOARD				
SLOT	TYPE	(Φ#/PED #)	DESCRIPTION					TERMINAL	WIRE COLOR CODE			
1 - TOP	Video Card		360 Degree Camera	Stop Bar Detectors				1A	AS PER SUPPLIER			
								1B	AS PER SUPPLIER			
1 - BOTTOM								2A				
								2B				
2 - TOP	222	Φ6	NB LT Rt 75 Setback	7	8			3A	SLI - 7 - W	SLI - 8 - W		
								3B	SLI - 7 - B	SLI - 8 - W		
2 - BOTTOM		Φ6	NB T Rt 75 Setback	9	10	11		4A	SLI - 9 - W	SLI - 10 - W	SLI - 7 - W	
								4B	SLI - 9 - B	SLI - 10 - W	SLI - 7 - W	
3 - TOP	222	Φ2	NB T/R Rt 75 Setback	12	13	14		5A	SLI - 5AB - W	SLI - 7 - W	SLI - 7 - W	
								5B	SLI - 5AB - B	SLI - 7 - W	SLI - 7 - W	
3 - BOTTOM		Φ2	EB T Aero Dr Setback	15	16			6A	SLI - 6ABC - W	SLI - 7 - W		
								6B	SLI - 6ABC - B	SLI - 7 - W		
4 - TOP								7A				
								7B				
4 - BOTTOM								8A				
								8B				
5 - TOP								9A				
								9B				
5 - BOTTOM								10A				
								10B				
6 - TOP								11A				
								11B				
6 - BOTTOM								12A				
								12B				
7 - TOP								13A				
								13B				
7 - BOTTOM								14A				
								14B				
8 - TOP								15A				
								15B				
8 - BOTTOM								16A				
								16B				
9 - TOP								17A				
								17B				
9 - BOTTOM								18A				
								18B				
10 - TOP								19A				
								19B				
10 - BOTTOM								20A				
								20B				
11 - TOP								21A				
								21B				
11 - BOTTOM								22A				
								22B				
12 - TOP								23A				
								23B				
12 - BOTTOM								24A				
								24B				
13 - TOP	242	Φ4 Ped	Crossing Nb Rt 78	W4.1	W4.2			25A	14/5C-W4.1-O	14/5C-W4.2-O		
								25B	14/5C-W4.1-B	14/5C-W4.2-B		
13 - BOTTOM		Φ6 Ped	Crossing Eb Aero Dr	W6.1	W6.2			26A	14/5C-W6.1-O	14/5C-W6.2-O		
								26B	14/5C-W6.1-B	14/5C-W6.2-B		
14 - TOP								27A				
								27B				
14 - BOTTOM								28A				
								28B				

AFFIX SEAL: BRIAN C. DANKERT, P.E.
ON: 22-JUN-2021 14:15

ALTERED BY:
ON:

STATE OF NEW YORK — BRIAN C. DANKERT — No. 092443 — LICENSED PROFESSIONAL ENGINEER

AS-BUILT REVISIONS
DESCRIPTION OF ALTERATIONS:

NY 78, TRANSIT ROAD, S.H. 1334A-1
FRENCH ROAD TO WEHRLE DRIVE
TOWNS OF CHEEKTOWAGA & LANCASTER
VILLAGE OF DEPEW
COUNTY: ERIE — REGION: 05

PIN 5813.61
NY 78
UTILITY QUALITY LEVEL D

BRIDGES

CULVERTS

ALL DIMENSIONS IN ft UNLESS OTHERWISE NOTED

TRAFFIC SIGNAL #492 (ERIE) PLAN

CONTRACT NUMBER D264571

DRAWING NO. TSP-22
SHEET NO. 184

IT IS A VIOLATION OF LAW FOR ANY PERSON, UNLESS THEY ARE ACTING UNDER THE DIRECTION OF A LICENSED PROFESSIONAL ENGINEER, ARCHITECT, LANDSCAPE ARCHITECT, OR LAND SURVEYOR, TO ALTER AN ITEM IN ANY WAY. IF AN ITEM BEARING THE STAMP OF A LICENSED PROFESSIONAL IS ALTERED, THE ALTERING ENGINEER, ARCHITECT, LANDSCAPE ARCHITECT, OR LAND SURVEYOR SHALL STAMP THE DOCUMENT AND INCLUDE THE NOTATION "ALTERED BY" FOLLOWED BY THEIR SIGNATURE, THE DATE OF SUCH ALTERATION, AND A SPECIFIC DESCRIPTION OF THE ALTERATION.

NEW YORK STATE OF OPPORTUNITY. Department of Transportation

PROJECT MANAGER S. S. VAIDYA
CHECK BRIAN C. DANKERT
DRAFTING KEITH A. GORECKI
CHECK BRIAN C. DANKERT
DESIGN KEITH A. GORECKI
JOB MANAGER R. F. SCHALLER
DESIGN SUPERVISOR S. S. VAIDYA
FILE NAME = 581361_CPH_TSP_LOC04_5.dgn
DATE/TIME = 22-JUN-2021 14:15
USER = kgorecki

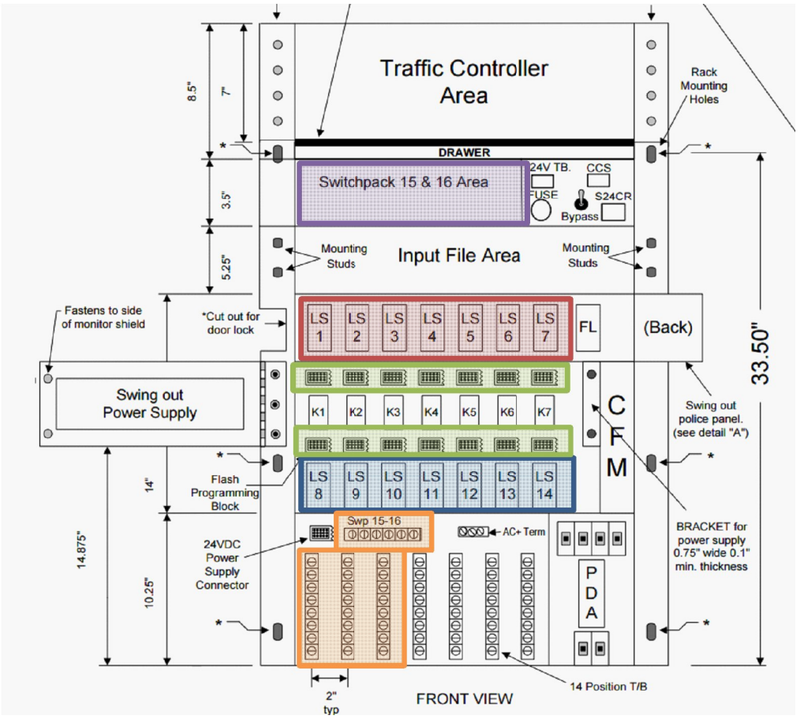

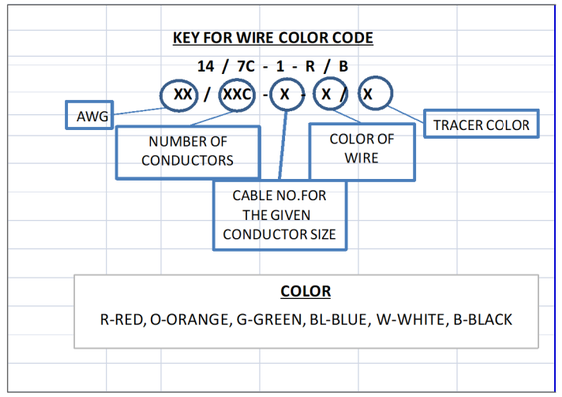

LEGEND

INDICATIONS					
G	= CIRCULAR GREEN	Y	= CIRCULAR YELLOW	R	= CIRCULAR RED
← G	= LEFT GREEN ARROW	← Y	= LEFT YELLOW ARROW	← R	= LEFT RED ARROW
→ G	= RIGHT GREEN ARROW	→ Y	= RIGHT YELLOW ARROW	→ R	= RIGHT RED ARROW
↑ G	= VERT. GREEN ARROW	← FY	= FLASHING YELLOW ARROW	WALK	=HAND/MAN
				DON'T WALK	=FLASHING HAD/COUNT DOWN TIMER
FLASH PLUG					
W	=DARK				
R	=FLASH RED				

SIGNAL OPERATIONS SPECIFICATIONS — DATE: 3/4/2021

TABLE OF SWITCH PACKS

	SIGNAL NUMBER	05-53-492				COUNTY	Erie	INTERSECTION	Rt 78 (Transit Rd) @ Aero Dr			
	SWITCH PACK	FUNCTION (Φ#/OVLP)	FACE NUMBERS				FLASH PLUG	INDICATIONS	TERMINAL WIRING BOARD			
									TERMINAL	WIRE COLOR CODE PER FACE			
TOP ROW (LS1-LS7)	SP 1								SP 1R				
									SP 1Y				
									SP 1G				
								GND. BAR	GND. BUS				
	SP 2	Φ2	4	5			Y	R	SP 2R	14/5C-4-R	14/5C-5-R		
								Y	SP 2Y	14/5C-4-Y	14/5C-5-Y		
								G	SP 2G	14/5C-4-G	14/5C-5-G		
								GND. WIRE	GND. BUS	14/5C-4-W	14/5C-5-W		
	SP 3								SP 3R				
									SP 3Y				
									SP 3G				
								GND. WIRE	GND. BUS				
	SP 4	Φ4	6	7			R	R	SP 4R	14/5C-6-R	14/5C-7-R		
								Y	SP 4Y	14/5C-6-Y	14/5C-7-Y		
								G	SP 4G	14/5C-6-G	14/5C-7-G		
								GND. WIRE	GND. BUS	14/5C-6-W	14/5C-7-W		
	SP 5	OvLap 5 FYA	3				Y	← R	SP 5R	14/7C-3-R			
								← Y	SP 5Y	14/7C-3-Y			
								← G	SP 5G	14/7C-3-G			
								GND. WIRE	GND. BUS	14/7C-3-W			
	SP 6	Φ6	1	2			Y	R	SP 6R	14/5C-1-R	14/5C-2-R		
								Y	SP 6Y	14/5C-1-Y	14/5C-2-Y		
								G	SP 6G	14/5C-1-G	14/5C-2-G		
								GND. WIRE	GND. BUS	14/5C-1-W	14/5C-2-W		
	SP 7								SP 7R				
									SP 7Y				
									SP 7G				
								GND. WIRE	GND. BUS				
BOTTOM ROW (LS8-LS14)	SP 8								SP 8R				
									SP 8Y				
									SP 8G				
								GND. WIRE	GND. BUS				
	SP 9								SP 9R				
									SP 9Y				
									SP 9G				
								GND. WIRE	GND. BUS				
	SP 10								SP 10R				
									SP 10Y				
									SP 10G				
								GND. WIRE	GND. BUS				
	SP 11								SP 11R				
									SP 11Y				
									SP 11G				
								GND. WIRE	GND. BUS				
	SP 12	Φ4 Ped	W4.1	W4.2			W	DON'T WALK	SP 12R	14/5C-W4.1-R	14/5C-W4.2-R		
									SP 12Y				
								WALK	SP 12G	14/5C-W4.1-G	14/5C-W4.2-G		
								GND. WIRE	GND. BUS	14/5C-W4.1-W	14/5C-W4.2-W		
	SP 13	Φ6 Ped w/FYA Output	W6.1	W6.2			W	DON'T WALK	SP 13R	14/7C-W6.1-R	14/7C-W6.2-R		
								← FY	SP 13Y	14/7C-3-BL			
								WALK	SP 13G	14/7C-W6.1-G	14/7C-W6.2-G		
								GND. WIRE	GND. BUS	14/7C-W6.1-W	14/7C-W6.2-W		
	SP 14								SP 14R				
									SP 14Y				
									SP 14G				
								GND. WIRE	GND. BUS				
SPECIAL	SP 15								SP 15R				
									SP 15Y				
									SP 15G				
								GND. WIRE	GND. BUS				
	SP 16								SP 16R				
									SP 16Y				
									SP 16G				
								GND. WIRE	GND. BUS				

AFFIX SEAL: BRIAN C. DANKERT, P.E.
ON: 22-JUN-2021 14:15

ALTERED BY:
ON:

AS-BUILT REVISIONS
DESCRIPTION OF ALTERATIONS:

NY 78, TRANSIT ROAD, S.H. 1334A-1
FRENCH ROAD TO WEHRLE DRIVE
TOWNS OF CHEEKTOWAGA & LANCASTER
VILLAGE OF DEPEW
COUNTY: ERIE REGION: 05

PIN 5813.61
NY 78
UTILITY QUALITY LEVEL D

BRIDGES

CULVERTS

ALL DIMENSIONS IN ft UNLESS OTHERWISE NOTED

TRAFFIC SIGNAL *492 (ERIE) PLAN

CONTRACT NUMBER D264571

DRAWING NO. TSP-23
SHEET NO. 185

IT IS A VIOLATION OF LAW FOR ANY PERSON, UNLESS THEY ARE ACTING UNDER THE DIRECTION OF A LICENSED PROFESSIONAL ENGINEER, ARCHITECT, LANDSCAPE ARCHITECT, OR LAND SURVEYOR, TO ALTER AN ITEM IN ANY WAY. IF AN ITEM BEARING THE STAMP OF A LICENSED PROFESSIONAL IS ALTERED, THE ALTERING ENGINEER, ARCHITECT, LANDSCAPE ARCHITECT, OR LAND SURVEYOR SHALL STAMP THE DOCUMENT AND INCLUDE THE NOTATION "ALTERED BY" FOLLOWED BY THEIR SIGNATURE, THE DATE OF SUCH ALTERATION, AND A SPECIFIC DESCRIPTION OF THE ALTERATION.

NEW YORK STATE OF OPPORTUNITY. Department of Transportation

DESIGN SUPERVISOR S. S. VAIDYA
JOB MANAGER R. F. SCHALLER
DESIGN KEITH A. GORECKI
CHECK BRIAN C. DANKERT
DRAFTING KEITH A. GORECKI
CHECK BRIAN C. DANKERT
PROJECT MANAGER S. S. VAIDYA
FILE NAME = 581361_CPH_TSP_LOC04_6.dgn
DATE/TIME = 22-JUN-2021 14:15
USER = kgorecki

SIGNAL #50 (ERIE)
NY ROUTE 78 (TRANSIT ROAD) AT GENESEE STREET

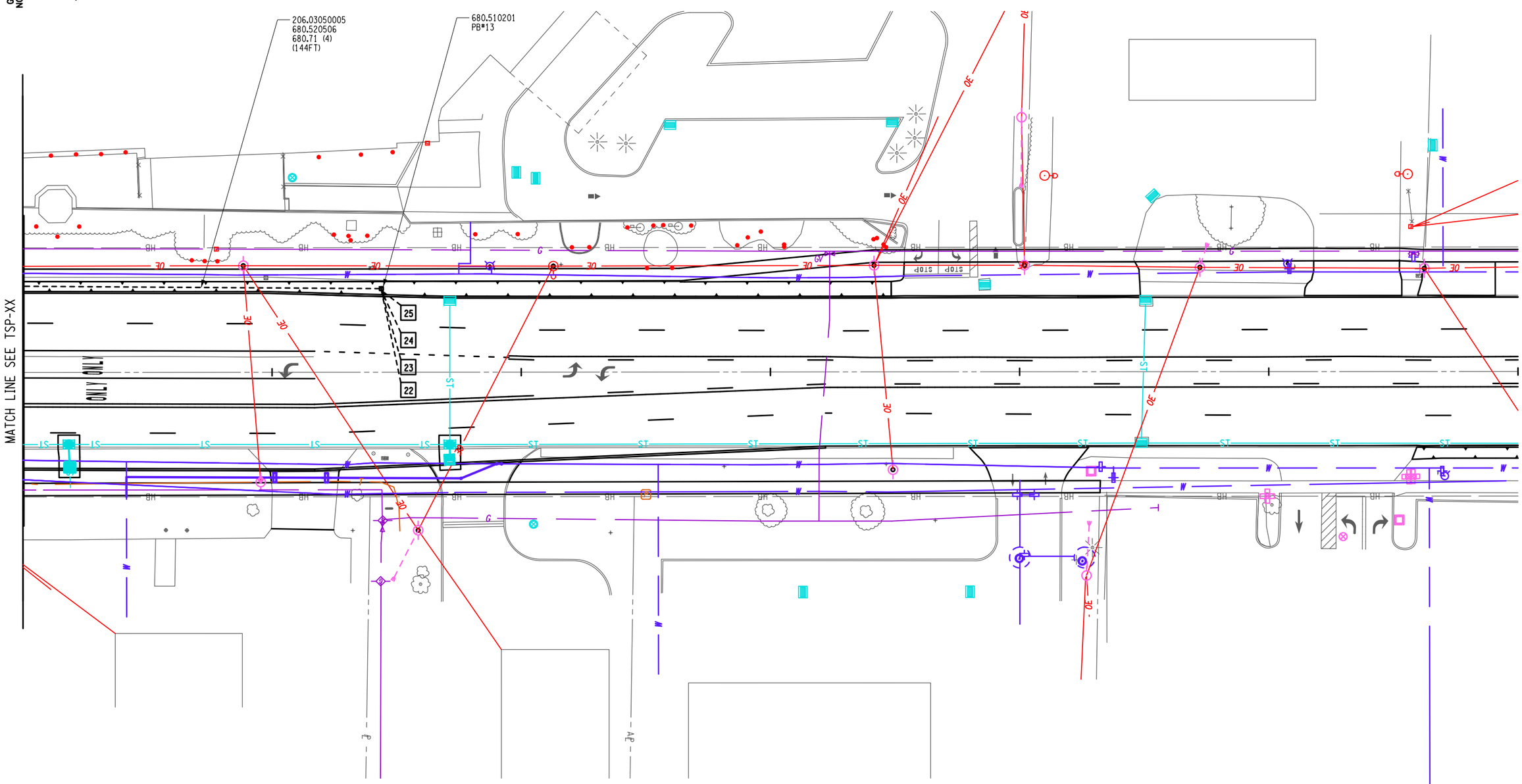

20 0 20 40 60 80′
1" = 40′

AFFIX SEAL: BRIAN C. DANKERT, P.E. ON: 22-JUN-2021 14:15	ALTERED BY: ON:

STATE OF NEW YORK · BRIAN C. DANKERT · No. 092443 · LICENSED PROFESSIONAL ENGINEER

AS-BUILT REVISIONS
DESCRIPTION OF ALTERATIONS:

NY 78, TRANSIT ROAD, S.H. 1334A-1
FRENCH ROAD TO WEHRLE DRIVE
TOWNS OF CHEEKTOWAGA & LANCASTER
VILLAGE OF DEPEW
COUNTY: ERIE REGION: 05

PIN 5813.61
NY 78
UTILITY QUALITY LEVEL D

BRIDGES

CULVERTS

ALL DIMENSIONS IN ft UNLESS OTHERWISE NOTED

TRAFFIC SIGNAL #50 (ERIE) PLAN

CONTRACT NUMBER
D264571

DRAWING NO. TSP-24
SHEET NO. 186

IT IS A VIOLATION OF LAW FOR ANY PERSON, UNLESS THEY ARE ACTING UNDER THE DIRECTION OF A LICENSED PROFESSIONAL ENGINEER, ARCHITECT, LANDSCAPE ARCHITECT, OR LAND SURVEYOR, TO ALTER AN ITEM IN ANY WAY. IF AN ITEM BEARING THE STAMP OF A LICENSED PROFESSIONAL IS ALTERED, THE ALTERING ENGINEER, ARCHITECT, LANDSCAPE ARCHITECT, OR LAND SURVEYOR SHALL STAMP THE DOCUMENT AND INCLUDE THE NOTATION "ALTERED BY" FOLLOWED BY THEIR SIGNATURE, THE DATE OF SUCH ALTERATION, AND A SPECIFIC DESCRIPTION OF THE ALTERATION.

NEW YORK STATE OF OPPORTUNITY. Department of Transportation

PROJECT MANAGER S. S. VAIDYA
CHECK BRIAN C. DANKERT
DRAFTING KEITH A. GORECKI
CHECK BRIAN C. DANKERT
DESIGN KEITH A. GORECKI
JOB MANAGER R. F. SCHALLER
DESIGN SUPERVISOR S. S. VAIDYA

FILE NAME = 581361_CPH_TSP_LOC05_01.dgn
DATE/TIME = 22-JUN-2021 14:15
USER = kgorecki

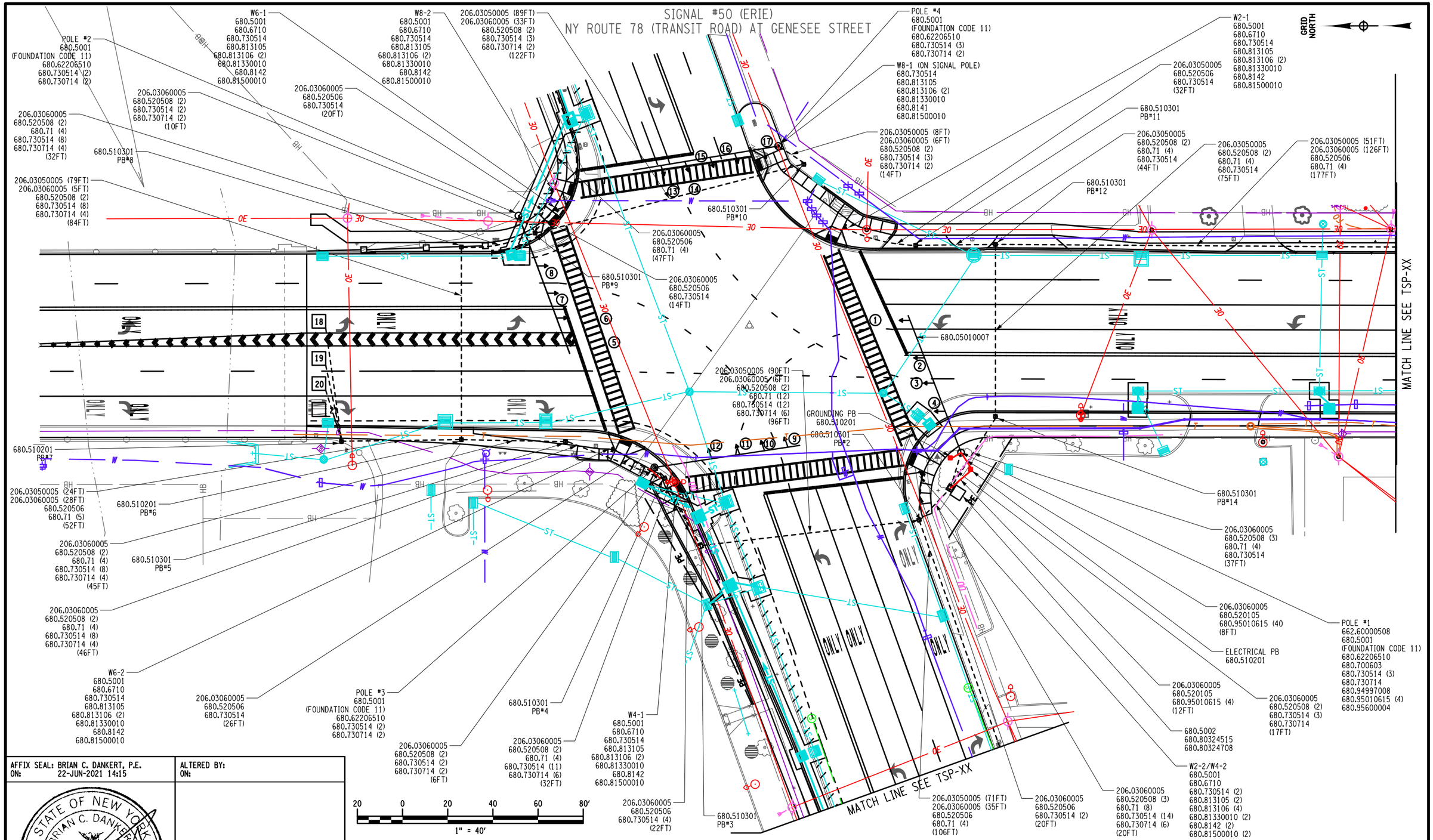

AFFIX SEAL: BRIAN C. DANKERT, P.E. ON: 22-JUN-2021 14:15	ALTERED BY: ON:

AS-BUILT REVISIONS
DESCRIPTION OF ALTERATIONS:

NY 78, TRANSIT ROAD, S.H. 1334A-1
FRENCH ROAD TO WEHRLE DRIVE
TOWNS OF CHEEKTOWAGA & LANCASTER
VILLAGE OF DEPEW
COUNTY: ERIE REGION: 05

PIN 5813.61
NY 78
UTILITY QUALITY LEVEL D

BRIDGES

CULVERTS

ALL DIMENSIONS IN ft UNLESS OTHERWISE NOTED

TRAFFIC SIGNAL #50 (ERIE) PLAN

CONTRACT NUMBER
D264571

DRAWING NO. TSP-25
SHEET NO. 187

IT IS A VIOLATION OF LAW FOR ANY PERSON, UNLESS THEY ARE ACTING UNDER THE DIRECTION OF A LICENSED PROFESSIONAL ENGINEER, ARCHITECT, LANDSCAPE ARCHITECT, OR LAND SURVEYOR, TO ALTER AN ITEM IN ANY WAY. IF AN ITEM BEARING THE STAMP OF A LICENSED PROFESSIONAL IS ALTERED, THE ALTERING ENGINEER, ARCHITECT, LANDSCAPE ARCHITECT, OR LAND SURVEYOR SHALL STAMP THE DOCUMENT AND INCLUDE THE NOTATION "ALTERED BY" FOLLOWED BY THEIR SIGNATURE, THE DATE OF SUCH ALTERATION, AND A SPECIFIC DESCRIPTION OF THE ALTERATION.

NEW YORK STATE OF OPPORTUNITY. Department of Transportation

PROJECT MANAGER S. S. VAIDYA
CHECK BRIAN C. DANKERT
DRAFTING KEITH A. GORECKI
CHECK BRIAN C. DANKERT
DESIGN KEITH A. GORECKI
JOB MANAGER R. F. SCHALLER
DESIGN SUPERVISOR S. S. VAIDYA

FILE NAME = 581361_CPH_TSP_1_0005_02.dgn
DATE/TIME = 22-JUN-2021 14:15
USER = kgorecki

SIGNAL #50 (ERIE)
NY ROUTE 78 (TRANSIT ROAD) AT GENESEE STREET

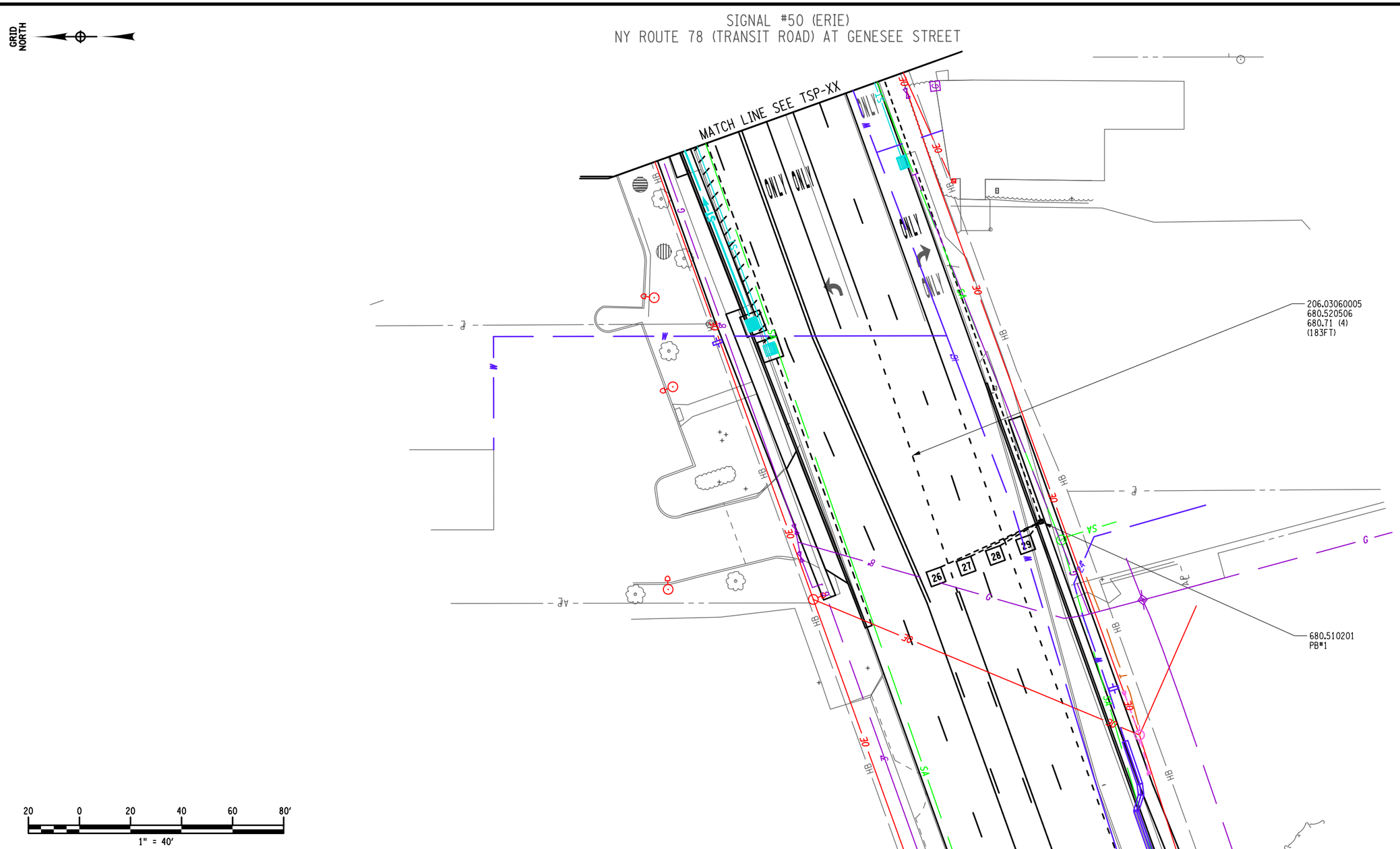

AFFIX SEAL: BRIAN C. DANKERT, P.E.
ON: 22-JUN-2021 14:16

ALTERED BY:
ON:

STATE OF NEW YORK
BRIAN C. DANKERT
No. 092443
LICENSED PROFESSIONAL ENGINEER

AS-BUILT REVISIONS
DESCRIPTION OF ALTERATIONS:

NY 78, TRANSIT ROAD, S.H. 1334A-1
FRENCH ROAD TO WEHRLE DRIVE
TOWNS OF CHEEKTOWAGA & LANCASTER
VILLAGE OF DEPEW
COUNTY: ERIE REGION: 05

PIN 5813.61
NY 78
UTILITY QUALITY LEVEL D

BRIDGES

CULVERTS

ALL DIMENSIONS IN ft UNLESS OTHERWISE NOTED

TRAFFIC SIGNAL #50 (ERIE) PLAN

CONTRACT NUMBER
D264571

DRAWING NO. TSP-26
SHEET NO. 188

IT IS A VIOLATION OF LAW FOR ANY PERSON, UNLESS THEY ARE ACTING UNDER THE DIRECTION OF A LICENSED PROFESSIONAL ENGINEER, ARCHITECT, LANDSCAPE ARCHITECT, OR LAND SURVEYOR, TO ALTER AN ITEM IN ANY WAY. IF AN ITEM BEARING THE STAMP OF A LICENSED PROFESSIONAL IS ALTERED, THE ALTERING ENGINEER, ARCHITECT, LANDSCAPE ARCHITECT, OR LAND SURVEYOR SHALL STAMP THE DOCUMENT AND INCLUDE THE NOTATION "ALTERED BY" FOLLOWED BY THEIR SIGNATURE, THE DATE OF SUCH ALTERATION, AND A SPECIFIC DESCRIPTION OF THE ALTERATION.

NEW YORK STATE OF OPPORTUNITY. Department of Transportation

DESIGN SUPERVISOR S. S. VAIDYA
JOB MANAGER R. F. SCHALLER
DESIGN KEITH A. GORECKI CHECK BRIAN C. DANKERT
DRAFTING KEITH A. GORECKI CHECK BRIAN C. DANKERT
PROJECT MANAGER S. S. VAIDYA

FILE NAME = 581361_CPH_TSP_LOC05_03.dgn
DATE/TIME = 22-JUN-2021 14:16
USER = kgorecki

SIGNAL #50 (ERIE)
NY ROUTE 78 (TRANSIT ROAD) AT GENESEE STREET

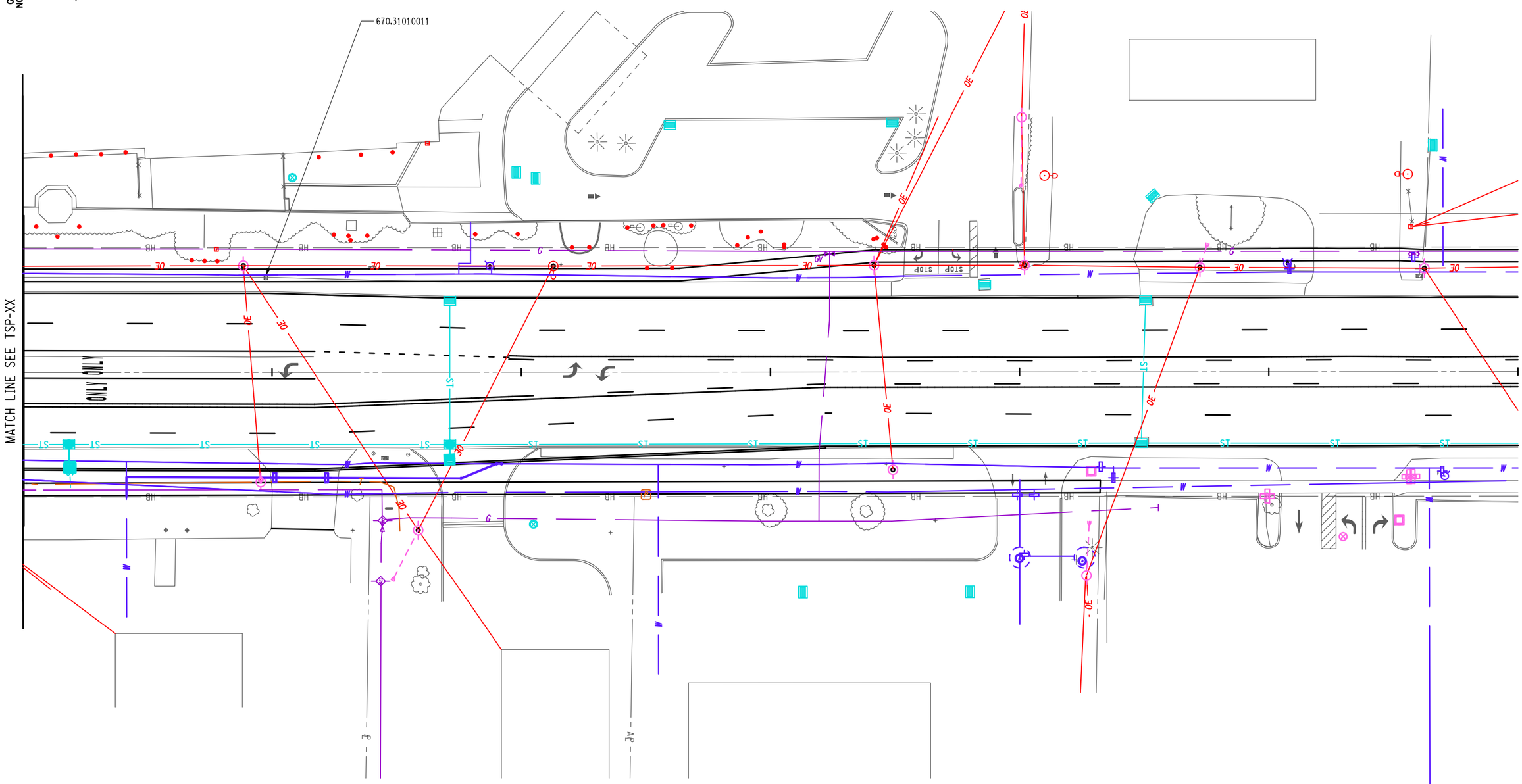

AFFIX SEAL: BRIAN C. DANKERT, P.E. ON: 22-JUN-2021 14:16	ALTERED BY: ON:

STATE OF NEW YORK · BRIAN C. DANKERT · No. 092443 · LICENSED PROFESSIONAL ENGINEER

AS-BUILT REVISIONS
DESCRIPTION OF ALTERATIONS:

NY 78, TRANSIT ROAD, S.H. 1334A-1
FRENCH ROAD TO WEHRLE DRIVE
TOWNS OF CHEEKTOWAGA & LANCASTER
VILLAGE OF DEPEW
COUNTY: ERIE REGION: 05

PIN 5813.61
NY 78
UTILITY QUALITY LEVEL D

BRIDGES

CULVERTS

ALL DIMENSIONS IN ft UNLESS OTHERWISE NOTED

TRAFFIC SIGNAL #50 (ERIE) PLAN

CONTRACT NUMBER D264571

DRAWING NO. TSP-27
SHEET NO. 189

IT IS A VIOLATION OF LAW FOR ANY PERSON, UNLESS THEY ARE ACTING UNDER THE DIRECTION OF A LICENSED PROFESSIONAL ENGINEER, ARCHITECT, LANDSCAPE ARCHITECT, OR LAND SURVEYOR, TO ALTER AN ITEM IN ANY WAY. IF AN ITEM BEARING THE STAMP OF A LICENSED PROFESSIONAL IS ALTERED, THE ALTERING ENGINEER, ARCHITECT, LANDSCAPE ARCHITECT, OR LAND SURVEYOR SHALL STAMP THE DOCUMENT AND INCLUDE THE NOTATION "ALTERED BY" FOLLOWED BY THEIR SIGNATURE, THE DATE OF SUCH ALTERATION, AND A SPECIFIC DESCRIPTION OF THE ALTERATION.

NEW YORK STATE OF OPPORTUNITY. Department of Transportation

PROJECT MANAGER S. S. VAIDYA
CHECK BRIAN C. DANKERT
DRAFTING KEITH A. GORECKI
CHECK BRIAN C. DANKERT
DESIGN KEITH A. GORECKI
JOB MANAGER R. F. SCHALLER
DESIGN SUPERVISOR S. S. VAIDYA

FILE NAME = 581361_CPH_TSP_LOC05_04.dgn
DATE/TIME = 22-JUN-2021 14:16
USER = kgorecki

SIGNAL #50 (ERIE)
NY ROUTE 78 (TRANSIT ROAD) AT GENESEE STREET

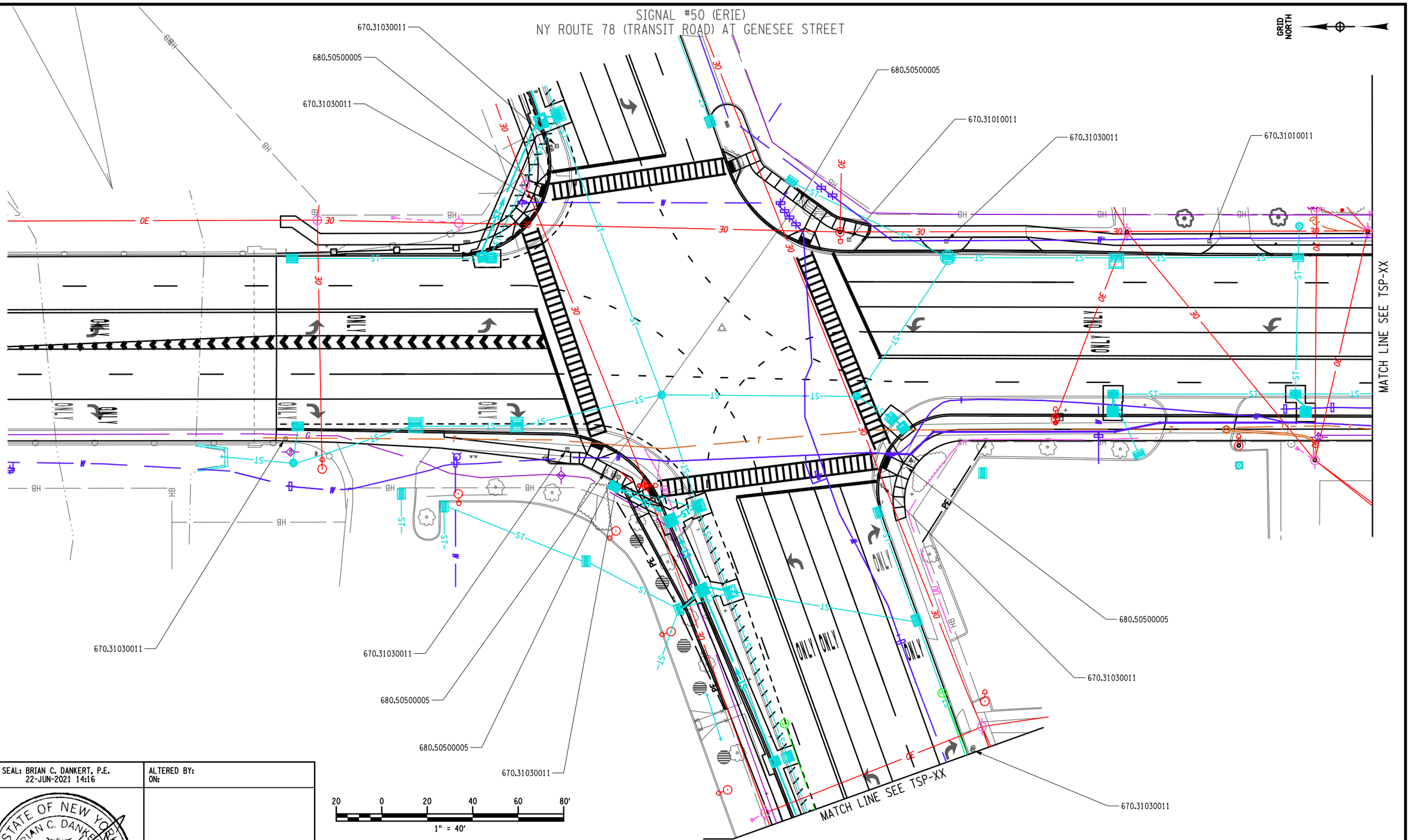

AS-BUILT REVISIONS DESCRIPTION OF ALTERATIONS:	NY 78, TRANSIT ROAD, S.H. 1334A-1 FRENCH ROAD TO WEHRLE DRIVE TOWNS OF CHEEKTOWAGA & LANCASTER VILLAGE OF DEPEW COUNTY: ERIE REGION: 05	PIN 5813.61 NY 78 UTILITY QUALITY LEVEL D	BRIDGES	CULVERTS	ALL DIMENSIONS IN ft UNLESS OTHERWISE NOTED TRAFFIC SIGNAL #50 (ERIE) PLAN	CONTRACT NUMBER D264571 DRAWING NO. TSP-28 SHEET NO. 190

AFFIX SEAL: BRIAN C. DANKERT, P.E.
ON: 22-JUN-2021 14:16

ALTERED BY:
ON:

STATE OF NEW YORK
BRIAN C. DANKERT
No. 092443
LICENSED PROFESSIONAL ENGINEER

IT IS A VIOLATION OF LAW FOR ANY PERSON, UNLESS THEY ARE ACTING UNDER THE DIRECTION OF A LICENSED PROFESSIONAL ENGINEER, ARCHITECT, LANDSCAPE ARCHITECT, OR LAND SURVEYOR, TO ALTER AN ITEM IN ANY WAY. IF AN ITEM BEARING THE STAMP OF A LICENSED PROFESSIONAL IS ALTERED, THE ALTERING ENGINEER, ARCHITECT, LANDSCAPE ARCHITECT, OR LAND SURVEYOR SHALL STAMP THE DOCUMENT AND INCLUDE THE NOTATION "ALTERED BY" FOLLOWED BY THEIR SIGNATURE, THE DATE OF SUCH ALTERATION, AND A SPECIFIC DESCRIPTION OF THE ALTERATION.

NEW YORK STATE OF OPPORTUNITY. Department of Transportation

PROJECT MANAGER S. S. VAIDYA
CHECK BRIAN C. DANKERT
DRAFTING KEITH A. GORECKI
CHECK BRIAN C. DANKERT
DESIGN KEITH A. GORECKI
JOB MANAGER R. F. SCHALLER
DESIGN SUPERVISOR S. S. VAIDYA

FILE NAME = 581361_CPH_TSP_LOC05_05.dgn
DATE/TIME = 22-JUN-2021 14:16
USER = kgorecki

GRID NORTH

SIGNAL #50 (ERIE)
NY ROUTE 78 (TRANSIT ROAD) AT GENESEE STREET

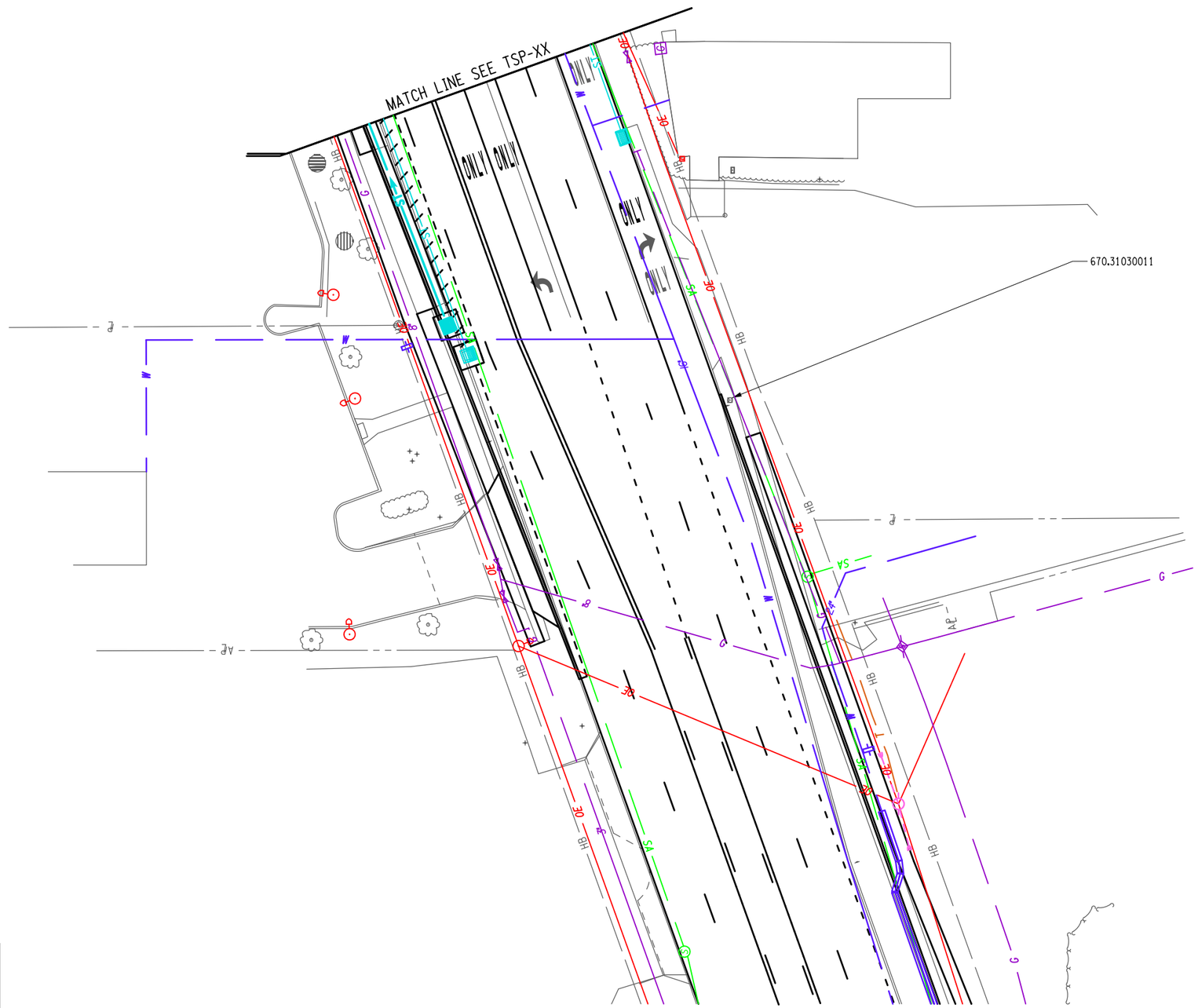

20 0 20 40 60 80′
1" = 40′

AFFIX SEAL: BRIAN C. DANKERT, P.E. ON: 22-JUN-2021 14:16	ALTERED BY: ON:

AS-BUILT REVISIONS DESCRIPTION OF ALTERATIONS:	NY 78, TRANSIT ROAD, S.H. 1334A-1 FRENCH ROAD TO WEHRLE DRIVE TOWNS OF CHEEKTOWAGA & LANCASTER VILLAGE OF DEPEW COUNTY: ERIE REGION: 05	PIN 5813.61 NY 78 UTILITY QUALITY LEVEL D	BRIDGES	CULVERTS	ALL DIMENSIONS IN ft UNLESS OTHERWISE NOTED TRAFFIC SIGNAL #50 (ERIE) PLAN	CONTRACT NUMBER D264571 DRAWING NO. TSP-29 SHEET NO. 191

IT IS A VIOLATION OF LAW FOR ANY PERSON, UNLESS THEY ARE ACTING UNDER THE DIRECTION OF A LICENSED PROFESSIONAL ENGINEER, ARCHITECT, LANDSCAPE ARCHITECT, OR LAND SURVEYOR, TO ALTER AN ITEM IN ANY WAY. IF AN ITEM BEARING THE STAMP OF A LICENSED PROFESSIONAL IS ALTERED, THE ALTERING ENGINEER, ARCHITECT, LANDSCAPE ARCHITECT, OR LAND SURVEYOR SHALL STAMP THE DOCUMENT AND INCLUDE THE NOTATION "ALTERED BY" FOLLOWED BY THEIR SIGNATURE, THE DATE OF SUCH ALTERATION, AND A SPECIFIC DESCRIPTION OF THE ALTERATION.

NEW YORK STATE OF OPPORTUNITY. Department of Transportation

DESIGN SUPERVISOR S. S. VAIDYA | JOB MANAGER R. F. SCHALLER | DESIGN KEITH A. GORECKI | CHECK BRIAN C. DANKERT | DRAFTING KEITH A. GORECKI | CHECK BRIAN C. DANKERT | PROJECT MANAGER S. S. VAIDYA

FILE NAME = 581361_CPH_TSP_LOC05_06.dgn
DATE/TIME = 22-JUN-2021 14:16
USER = kgorecki

LOCATION 5 - NYSDOT TRAFFIC SIGNAL #50 (ERIE)
NY ROUTE 78 (TRANSIT ROAD) AT GENESEE STREET

QUANTITY AND ITEM LIST

SIGNAL #50 (ERIE) - NY ROUTE 78 (TRANSIT ROAD) AT GENESEE STREET

ITEM NO.	DESCRIPTION	UNIT	QTY
206.03050005	CONDUIT EXCAV & BACKFILL (IN ROADWAY)	FT	566
206.03060005	CONDUIT EXCAV & BACKFILL (NOT IN ROADWAY)	FT	942
619.1611	MAINTAIN TRAFFIC SIGNAL EQUIPMENT (REQ A)	MO	8
645.61	OVERHEAD SIGN PANELS	SF	120
662.60000508	FURNISHING ELECTRICAL SERVICE	DC	1
670.31010011	ABANDON EXISTING PULLBOX WITH CLASS A CONCRETE	EA	3
670.31030011	ABANDON EXISTING PULLBOX WITH SUITABLE MATERIAL	EA	9
680.05010007	360 DEGREE CAMERA VIDEO DETECTION SYSTEM	EA	1
680.50500005	REMOVE EXISTING FOUNDATION	FT	5
680.5001	POLE EXCAVATION AND CONCRETE FOUNDATION	CY	21
680.5002	CONCRETE BASE FOR CONTROLLER CABINET	EA	1
680.510201	PULLBOX-CIRCULAR, 18" IN DIA., REINFORCED CONCRETE	EA	5
680.510301	PULLBOX-CIRCULAR, 24" IN DIA., REINFORCED CONCRETE	EA	11
680.520105	CONDUIT, STEEL, ZINC COATED, 1-1/2"	FT	20
680.520506	CONDUIT, RIGID PLASTIC, CLASS 1 , 2 NPS	FT	796
680.520508	CONDUIT, RIGID PLASTIC, CLASS 1 , 3 NPS	FT	1417
680.53080305	CONDUIT, FLEX-TIGHT NON-METAL, 1NPS	FT	36
680.54	INDUCTANCE LOOP INSTALLATION	FT	898
680.62206510	SIGNAL POLE-MAST ARM 20' MTD HEIGHT, 65' ARM, FATIGUE DESIGN	EA	4
680.6710	SIGNAL POLE-POST TOP MOUNT 10' MTD HEIGHT	EA	7
680.700603	RISER ASSEMBLY, 1" DIA.	EA	1
680.71	SHIELDED LEAD-IN CABLE	FT	4384
680.72	INDUCTANCE LOOP WIRE	FT	2520
680.730514	SIGNAL CABLE, 5 CONDUCTOR, 14 AWG	FT	7351
680.730714	SIGNAL CABLE, 7 CONDUCTOR, 14 AWG	FT	738
680.79000505	REMOVE TRAFFIC SIGNAL INSTALLATION, LOCATION 5	ELOC	1
680.80324515	INSTALL MICROCOMPUTER CABINET	EA	1
680.80324708	MICROCOMPUTER CABINET BASE (ALUMINUM)	EA	1
680.810101	SIGNAL MODULE - 12 IN, RED BALL LED	EA	10
680.810102	SIGNAL MODULE - 12 IN, RED ARROW LED	EA	7
680.810103	SIGNAL MODULE - 12 IN, YELLOW BALL LED	EA	10
680.810104	SIGNAL MODULE - 12 IN, YELLOW ARROW LED	EA	10
680.810105	SIGNAL MODULE - 12 IN, GREEN BALL LED	EA	10
680.810106	SIGNAL MODULE - 12 IN, GREEN ARROW LED	EA	9
680.810601	SIGNAL SECTION, POLYCARBONITE, TYPE 1, 12IN	EA	56
680.8111	TRAFFIC SIGNAL BRACKET ASSEMBLY - 1 WAY	EA	17
680.813105	PEDESTRIAN SIGNAL MODULE 12IN, BI-MODAL HAND/MAN	EA	8
680.813106	PEDESTRIAN SIGNAL SECTION - POLYCARBONITE, TYPE 1, 12IN.	EA	16
680.81330010	AUDIBLE PEDESTRIAN SIGNAL	EA	8
680.8141	PEDESTRIAN SIGNAL BRACKET MOUNT ASSEMBLY	EA	1
680.8142	PEDESTRIAN SIGNAL TOP MOUNT ASSEMBLY	EA	7
680.81500010	PEDESTRIAN COUNT DOWN TIMER	EA	8
680.81990003	ALUMINUM TRAFFIC SIGNAL HEAD BACK PLATES W/ YELLOW STRIPES	EA	17
680.8205	OVERHEAD SIGN ASSEMBLY, TYPE E	EA	9
680.94997008	F AND I ELECTRICAL DISCONNECT GEN. TRAN SWITCH	EA	1
680.95010615	SERVICE CABLE, 1 CONDUCTOR, 6 AWG	FT	160
680.95600004	ELECTRICAL METER PAN	EA	1

1.) EXISTING PULLBOX LOCATIONS ON PLANS ARE SHOWN BASED ON RECORD PLANS. ACTUAL FIELD LOCATIONS MAY VARY.

2.) ITEM 680.79000505, "REMOVE TRAFFIC SIGNAL INSTALLATION, LOCATION 5" SHALL INCLUDE THE REMOVAL OF THE EXISTING TRAFFIC SIGNAL EQUIPMENT LISTED BELOW. ALL EQUIPMENT LISTED SHALL BE DISPOSED OF AND ONLY LED SERIAL NUMBERS SHALL BE RECORDED AND GIVEN TO NYSDOT TRAFFIC SIGNAL MAINTENANCE CREW.

- ALL EXISTING TRAFFIC SIGNAL EQUIPMENT

SIGNAL HEAD DATA TABLE

FACE \ ITEM	680.810101	680.810102	680.810103	680.810104	680.810105	680.810106	680.810601	680.8111	680.81990003
1	-	1	-	2	-	1	4	1	1
2	1	-	1	-	1	-	3	1	1
3	1	-	1	-	1	-	3	1	1
4	1	-	1	1	1	1	5	1	1
5	-	1	-	1	-	1	3	1	1
6	-	1	-	1	-	1	3	1	1
7	1	-	1	-	1	-	3	1	1
8	1	-	1	-	1	-	3	1	1
9	-	1	-	1	-	1	3	1	1
10	-	1	-	1	-	1	3	1	1
11	1	-	1	-	1	-	3	1	1
12	1	-	1	-	1	-	3	1	1
13	-	1	-	1	-	1	3	1	1
14	-	1	-	1	-	1	3	1	1
15	1	-	1	-	1	-	3	1	1
16	1	-	1	-	1	-	3	1	1
17	1	-	1	1	1	1	5	1	1
TOTALS	**10 EA**	**7 EA**	**10 EA**	**10 EA**	**10 EA**	**9 EA**	**56 EA**	**17 EA**	**17 EA**

SIGNAL HEAD LAYOUT

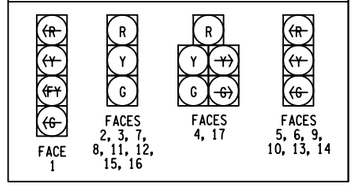

KEY

R - RED BALL
Y - YELLOW BALL
G - GREEN BALL
~~(R)~~ - RED ARROW
~~(Y)~~ - YELLOW ARROW
~~(FY)~~ - FLASHING YELLOW ARROW
~~(G)~~ - GREEN ARROW

TRAFFIC SIGNAL #50 (ERIE)	
POWER SUPPLIER:	
NEW METER #:	
NEW ACCOUNT #:	
BILLING TO:	

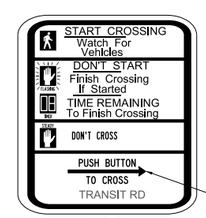

R10-3i

NEW PEDESTRIAN SIGNS SHALL BE SIGN NUMBER R10-3i FROM THE MUTCD.

"TRANSIT RD" FOR W2-1, W2-2, W6-1 & W6-2
"GENESEE ST" FOR W4-1, W4-2, W8-1 & W8-2

ARROW MAY FACE LEFT OR RIGHT, IT IS CONTRACTORS RESPONSIBILITY FOR PROPER ARROW ORIENTATION.

AUDIBLE WIRING NOTE:

THE COST TO FURNISH AND INSTALL WIRING BETWEEN THE AUDIBLE PEDESTRIAN SIGNAL (APS) UNITS AND THEIR RESPECTIVE CONTROL UNITS MOUNTED IN THE PED. HEADS SHALL BE INCLUDED UNDER PROVISIONS OF ITEM 680.81330010.

THE MANUFACTURER'S SUGGESTED CABLES FOR USE WITH AUDIBLE PEDESTRIAN SIGNAL UNITS ARE BELDEN 8489 FOR ABOVE GROUND.

BELDEN 8489, OR EQUIVALENT, SHALL BE USED WITH 680.81330010.

REFER TO "EZCOMMUNICATOR 4 WIRE NAVIGATOR APS SYSTEM INSTALLATION MANUAL" FOR MANUFACTURER'S INSTALLATION DETAILS AND PROCEDURES.

AFFIX SEAL: BRIAN C. DANKERT, P.E.
ON: 22-JUN-2021 14:16

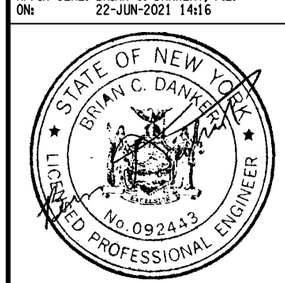

ALTERED BY:
ON:

AS-BUILT REVISIONS
DESCRIPTION OF ALTERATIONS:

NY 78, TRANSIT ROAD, S.H. 1334A-1
FRENCH ROAD TO WEHRLE DRIVE
TOWNS OF CHEEKTOWAGA & LANCASTER
VILLAGE OF DEPEW
COUNTY: ERIE REGION: 05

PIN 5813.61
NY 78
UTILITY QUALITY LEVEL D

BRIDGES

CULVERTS

ALL DIMENSIONS IN ft UNLESS OTHERWISE NOTED

TRAFFIC SIGNAL #50 (ERIE) PLAN

CONTRACT NUMBER D264571

DRAWING NO. TSP-30
SHEET NO. 192

IT IS A VIOLATION OF LAW FOR ANY PERSON, UNLESS THEY ARE ACTING UNDER THE DIRECTION OF A LICENSED PROFESSIONAL ENGINEER, ARCHITECT, LANDSCAPE ARCHITECT, OR LAND SURVEYOR, TO ALTER AN ITEM IN ANY WAY. IF AN ITEM BEARING THE STAMP OF A LICENSED PROFESSIONAL IS ALTERED, THE ALTERING ENGINEER, ARCHITECT, LANDSCAPE ARCHITECT, OR LAND SURVEYOR SHALL STAMP THE DOCUMENT AND INCLUDE THE NOTATION "ALTERED BY" FOLLOWED BY THEIR SIGNATURE, THE DATE OF SUCH ALTERATION, AND A SPECIFIC DESCRIPTION OF THE ALTERATION.

NEW YORK STATE OF OPPORTUNITY. Department of Transportation

DESIGN SUPERVISOR S. S. VAIDYA
JOB MANAGER R. F. SCHALLER
DESIGN KEITH A. GORECKI
CHECK BRIAN C. DANKERT
DRAFTING KEITH A. GORECKI
CHECK BRIAN C. DANKERT
PROJECT MANAGER S. S. VAIDYA

FILE NAME = 581361_CPH_TSP_LOC05_07.dgn
DATE/TIME = 22-JUN-2021 14:16
USER = kgorecki

LOCATION 5 - NYSDOT TRAFFIC SIGNAL #50 (ERIE)
NY ROUTE 78 (TRANSIT ROAD) AT GENESEE STREET

581361 - NY 78 (TRANSIT RD); FRENCH RD to ELLICOTT CREEK

05-53-50

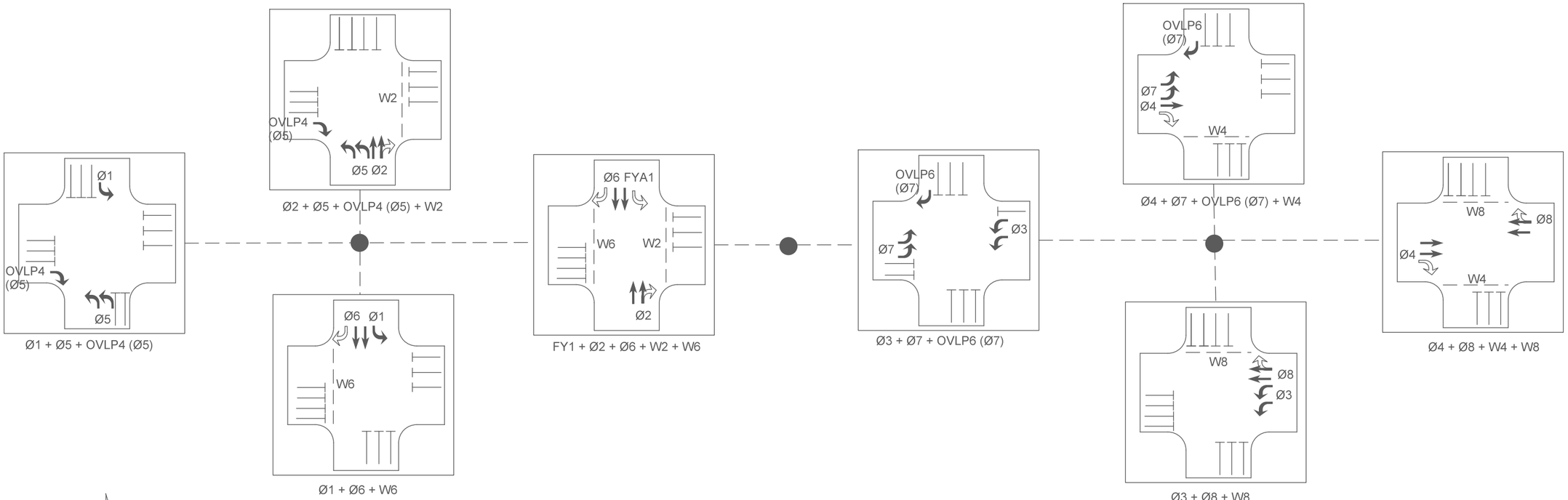

N

Ø1 - SB LEFT (TRANSIT RD, RTE. 78)
Ø2 - NB THROUGH/RIGHT (TRANSIT RD, RTE. 78)
Ø3 - WB LEFT (GENESEE ST, RTE. 33)
Ø4 - EB THROUGH/RIGHT (GENESEE ST, RTE. 33
Ø5 - NB LEFT (TRANSIT RD, RTE. 78)
Ø6 - SB THROUGH/RIGHT (TRANSIT RD, RTE. 78)
Ø7 - EB LEFT (GENESEE ST, RTE. 33)
Ø8 - WB THROUGH/RIGHT (GENESEE ST, RTE. 33)

OVLP4 (Ø5) - EB RIGHT (GENESEE ST, RTE. 33)
OVLP6 (Ø7) - SB RIGHT (TRANSIT RD, RTE. 78)

W2 - WB APPROACH PEDESTRIAN CROSSING
W4 - SB APPROACH PEDESTRIAN CROSSING
W6 - EB APPROACH PEDESTRIAN CROSSING
W8 - NB APPROACH PEDESTRIAN CROSSING

5/1/2020

AFFIX SEAL: BRIAN C. DANKERT, P.E.
ON: 22-JUN-2021 14:16

ALTERED BY:
ON:

STATE OF NEW YORK
BRIAN C. DANKERT
No. 092443
LICENSED PROFESSIONAL ENGINEER

AS-BUILT REVISIONS
DESCRIPTION OF ALTERATIONS:

NY 78, TRANSIT ROAD, S.H. 1334A-1
FRENCH ROAD TO WEHRLE DRIVE
TOWNS OF CHEEKTOWAGA & LANCASTER
VILLAGE OF DEPEW
COUNTY: ERIE REGION: 05

PIN 5813.61
NY 78
UTILITY QUALITY LEVEL D

BRIDGES

CULVERTS

ALL DIMENSIONS IN ft UNLESS OTHERWISE NOTED

TRAFFIC SIGNAL #50 (ERIE) PLAN

CONTRACT NUMBER
D264571

DRAWING NO. TSP-31
SHEET NO. 193

IT IS A VIOLATION OF LAW FOR ANY PERSON, UNLESS THEY ARE ACTING UNDER THE DIRECTION OF A LICENSED PROFESSIONAL ENGINEER, ARCHITECT, LANDSCAPE ARCHITECT, OR LAND SURVEYOR, TO ALTER AN ITEM IN ANY WAY. IF AN ITEM BEARING THE STAMP OF A LICENSED PROFESSIONAL IS ALTERED, THE ALTERING ENGINEER, ARCHITECT, LANDSCAPE ARCHITECT, OR LAND SURVEYOR SHALL STAMP THE DOCUMENT AND INCLUDE THE NOTATION "ALTERED BY" FOLLOWED BY THEIR SIGNATURE, THE DATE OF SUCH ALTERATION, AND A SPECIFIC DESCRIPTION OF THE ALTERATION.

NEW YORK STATE OF OPPORTUNITY. Department of Transportation

DESIGN SUPERVISOR S. S. VAIDYA JOB MANAGER R. F. SCHALLER DESIGN KEITH A. GORECKI CHECK BRIAN C. DANKERT DRAFTING KEITH A. GORECKI CHECK BRIAN C. DANKERT PROJECT MANAGER S. S. VAIDYA

FILE NAME = 581361_CPH_TSP_LOC05_08.dgn
DATE/TIME = 22-JUN-2021 14:16
USER = kgorecki

LOCATION 5 - NYSDOT TRAFFIC SIGNAL #50 (ERIE)
NY ROUTE 78 (TRANSIT ROAD) AT GENESEE STREET

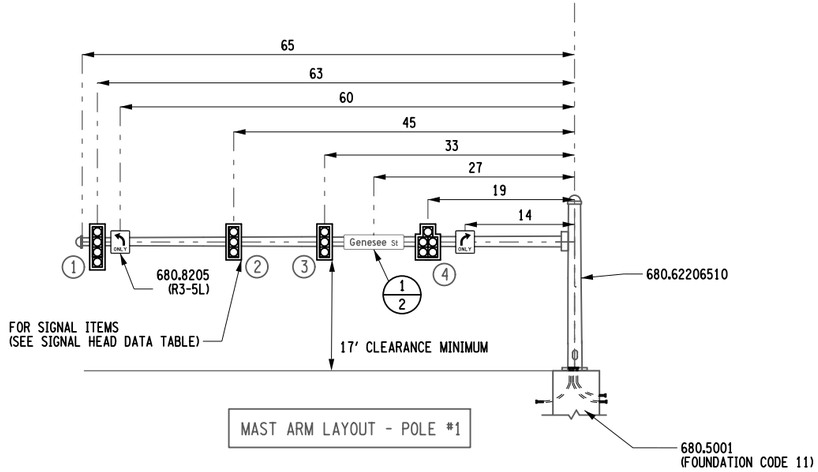

MAST ARM LAYOUT - POLE #1

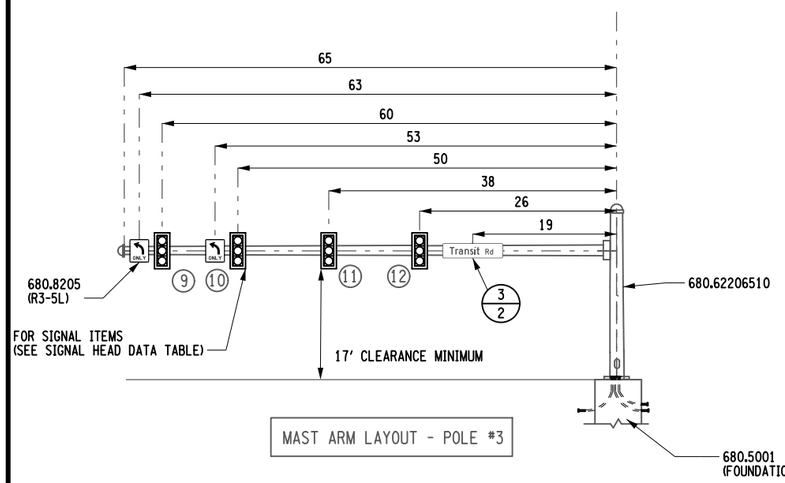

MAST ARM LAYOUT - POLE #3

SIGN FACE DATA TABLE		
ITEM	DESCRIPTION	QTY
680.8205	OVERHEAD SIGN ASSEMBLY, TYPE E	9
7 EACH SIZE 30" X 36"	R3-5L	
2 EACH SIZE 30" X 36"	R3-5R	

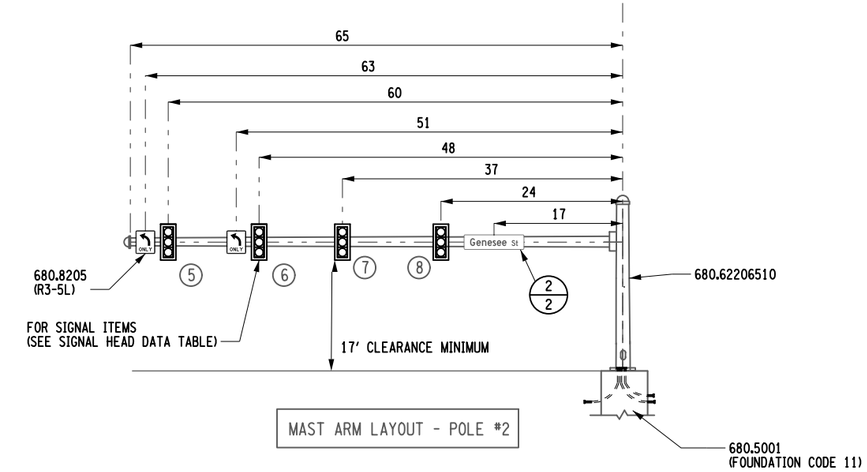

MAST ARM LAYOUT - POLE #2

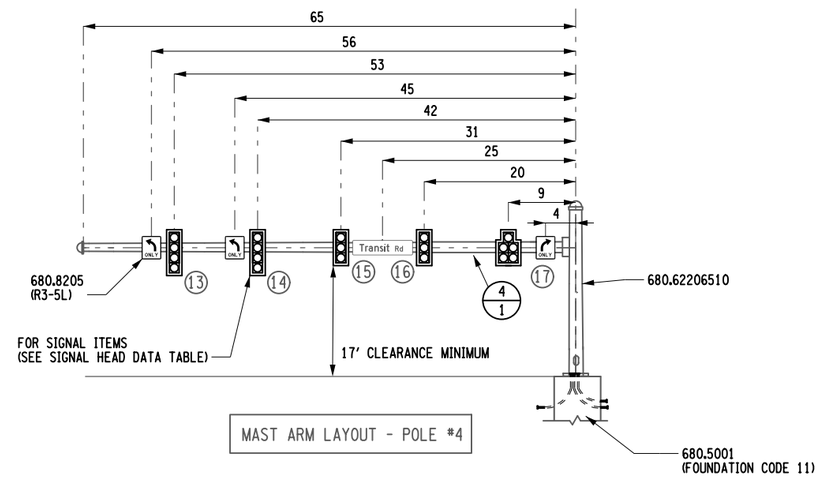

MAST ARM LAYOUT - POLE #4

NOTES:

1) CONDUIT ORIENTATION SHOWN MAY DIFFER FROM REQUIRED ORIENTATION. FIELD VERIFY BEFORE CONDUIT INSTALLATION.

2) DISTANCES SHOWN ARE APPROXIMATE. SIGNAL HEADS AND SIGNS MAY BE ADJUSTED IN THE FIELD WITH APPROVAL OF EIC.

3) POWER METER AND DISCONNECT/TRANSFER SWITCH SHALL BE INSTALLED AS PER STANDARD SHEET 680-05.

4) CONTRACTOR IS RESPONSIBLE THAT POWER METER IS AT A HEIGHT THAT COMPLIES WITH ALL REQUIREMENTS AND ELECTRICAL CODES AS PUT FORTH BY ELECTRICAL UTILITY SUPPLIER.

TEXT NUMBER	LOCATION NUMBER	ITEM NUMBER	PAYMENT FACTOR	TOTAL QUANTITY	TEXT WxH (in)		M.U.T.C.D. NUMBER	MOUNT
1	3, 4 / 2	645.61	30.00 sf	60.00 sf	Transit Rd BACK TO BACK Transit Rd	90 X 24	D3-1	OH MTD
2	1, 2 / 2	645.61	32.00 sf	64.00 sf	Genesee St BACK TO BACK Genesee St	96 X 24	D3-1	OH MTD

LEGEND	
SYMBOL	DESCRIPTION
GR MTD	GROUND MOUNTED
OH MTD	OVERHEAD MOUNTED
BR MTD	BRIDGE MOUNTED
PO MTD	POLE MOUNTED
	BACK TO BACK

GENERAL NOTES:

1. SIGN LOCATIONS AS SHOWN ON PLANS ARE APPROXIMATE. THE CONTRACTOR SHALL RELOCATE EXISTING SIGNS AND INSTALL NEW SIGNS IN ACCORDANCE WITH THE MUTCD AND NYS SUPPLEMENT. THE EIC SHOULD CONTACT THE REGIONAL TRAFFIC ENGINEERING AND SAFETY GROUP WITH QUESTIONS.

2. THE PAYMENT FACTORS FOR SIGNS ARE FROM THE APPLICABLE STANDARD SHEETS OR SIGN FACE LAYOUTS.

3. THE PAYMENT FACTOR FOR POSTS IS THE NUMBER OF POSTS PROVIDED PER INSTALLATION.

LEGEND	
(L/T)	NEW SIGN LOCATION
(L)	REMOVAL LOCATION
(T)	SIGN TO REMAIN
(L/T)	RELOCATE TO POSITION SHOWN
"L" - LOCATION NUMBER	
"T" - TEXT NUMBER	

AFFIX SEAL: BRIAN C. DANKERT, P.E.
ON: 22-JUN-2021 14:16

ALTERED BY:
ON:

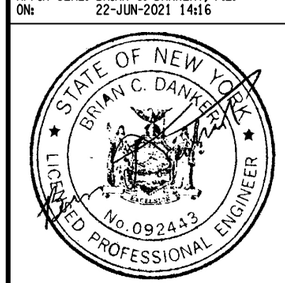

AS-BUILT REVISIONS
DESCRIPTION OF ALTERATIONS:

NY 78, TRANSIT ROAD, S.H. 1334A-1
FRENCH ROAD TO WEHRLE DRIVE
TOWNS OF CHEEKTOWAGA & LANCASTER
VILLAGE OF DEPEW
COUNTY: ERIE REGION: 05

PIN 5813.61
NY 78
UTILITY QUALITY LEVEL D

BRIDGES

CULVERTS

ALL DIMENSIONS IN ft UNLESS OTHERWISE NOTED

TRAFFIC SIGNAL #50 (ERIE) PLAN

CONTRACT NUMBER
D264571

DRAWING NO. TSP-32
SHEET NO. 194

IT IS A VIOLATION OF LAW FOR ANY PERSON, UNLESS THEY ARE ACTING UNDER THE DIRECTION OF A LICENSED PROFESSIONAL ENGINEER, ARCHITECT, LANDSCAPE ARCHITECT, OR LAND SURVEYOR, TO ALTER AN ITEM IN ANY WAY. IF AN ITEM BEARING THE STAMP OF A LICENSED PROFESSIONAL IS ALTERED, THE ALTERING ENGINEER, ARCHITECT, LANDSCAPE ARCHITECT, OR LAND SURVEYOR SHALL STAMP THE DOCUMENT AND INCLUDE THE NOTATION "ALTERED BY" FOLLOWED BY THEIR SIGNATURE, THE DATE OF SUCH ALTERATION, AND A SPECIFIC DESCRIPTION OF THE ALTERATION.

NEW YORK STATE OF OPPORTUNITY. Department of Transportation

PROJECT MANAGER S. S. VAIDYA
CHECK BRIAN C. DANKERT
DRAFTING KEITH A. GORECKI
CHECK BRIAN C. DANKERT
DESIGN KEITH A. GORECKI
JOB MANAGER R. F. SCHALLER
DESIGN SUPERVISOR S. S. VAIDYA
FILE NAME = 581361_CPH_TSP_LOC05_09.dgn
DATE/TIME = 22-JUN-2021 14:16
USER = kgorecki

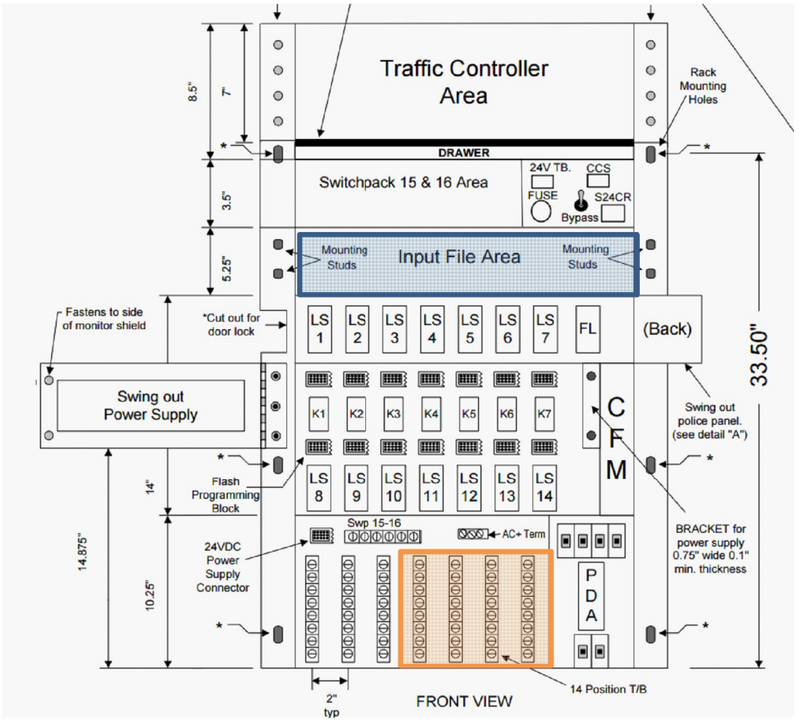

KEY FOR WIRE COLOR CODE

14 / 7C - 1 - R / B

XX / XXC - X - X / X

AWG — NUMBER OF CONDUCTORS — CABLE NO. FOR THE GIVEN CONDUCTOR SIZE — COLOR OF WIRE — TRACER COLOR

COLOR

R-RED, O-ORANGE, G-GREEN, BL-BLUE, W-WHITE, B-BLACK

TYPE:
222 Dual Loop Vehicle Detector Module
232 Dual Magnetic Detector Amplifier Module
242 Dual Isolation Module (DC)
252 Dual Isolation Module (AC)

SIGNAL OPERATIONS SPECIFICATIONS — DATE: 6/4/2021

TABLE OF INPUT WIRING

SIGNAL NUMBER	05-53-50	COUNTY	Erie	INTERSECTION	Rt 78 @ Rt 33

INPUT FILE AREA		FUNCTION		DETECTOR LOCATION ID (PER PLAN)				TERMINAL WIRING BOARD				
SLOT	TYPE	(Φ#/PED #)	DESCRIPTION					TERMINAL	WIRE COLOR CODE			
1 - TOP	Video Card	Video Card	360 Degree Camera					1A	AS PER SUPPLIER			
								1B	AS PER SUPPLIER			
1 - BOTTOM								2A				
								2B				
2 - TOP	222	Φ6	SB T Rt 78 Setback	18	19	20	21	3A	SLI - 18 - W	SLI - 19 - W	SLI - 20 - W	SLI - 21 - W
								3B	SLI - 18 - B	SLI - 19 - B	SLI - 20 - B	SLI - 21 - B
2 - BOTTOM		Φ2	NB T Rt 78 Setback	22	23	24	25	4A	SLI - 22 - W	SLI - 23 - W	SLI - 24 - W	SLI - 25 - W
								4B	SLI - 22 - B	SLI - 23 - B	SLI - 24 - B	SLI - 25 - B
3 - TOP	222	Φ4	EB T Rt 33 Setback	26	27	28	29	5A	SLI - 26 - W	SLI - 27 - W	SLI - 28 - W	SLI - 29 - W
								5B	SLI - 26 - B	SLI - 27 - B	SLI - 28 - W	SLI - 29 - W
3 - BOTTOM								6A				
								6B				
4 - TOP								7A				
								7B				
4 - BOTTOM								8A				
								8B				
5 - TOP								9A				
								9B				
5 - BOTTOM								10A				
								10B				
6 - TOP								11A				
								11B				
6 - BOTTOM								12A				
								12B				
7 - TOP								13A				
								13B				
7 - BOTTOM								14A				
								14B				
8 - TOP								15A				
								15B				
8 - BOTTOM								16A				
								16B				
9 - TOP								17A				
								17B				
9 - BOTTOM								18A				
								18B				
10 - TOP								19A				
								19B				
10 - BOTTOM								20A				
								20B				
11 - TOP								21A				
								21B				
11 - BOTTOM								22A				
								22B				
12 - TOP								23A				
								23B				
12 - BOTTOM								24A				
								24B				
13 - TOP	242	Φ2 Ped	Crossing Rt 33	W2.1	W2.2			25A	14/5C-W2.1-O	14/5C-W2.2-O		
								25B	14/5C-W2.1-B	14/5C-W2.2-B		
13 - BOTTOM		Φ4 Ped	Crossing Rt 78	W4.1	W4.2			26A	14/5C-W4.1-O	14/5C-W4.2-O		
								26B	14/5C-W4.1-B	14/5C-W4.2-B		
14 - TOP	242	Φ6 Ped	Crossing Rt 33	W6.1	W6.2			27A	14/5C-W6.1-O	14/5C-W6.2-O		
								27B	14/5C-W6.1-B	14/5C-W6.2-B		
14 - BOTTOM		Φ8 Ped	Crossing Rt 78	W8.1	W8.2			28A	14/5C-W8.1-O	14/5C-W8.2-O		
								28B	14/5C-W8.1-B	14/5C-W8.2-B		

AFFIX SEAL: BRIAN C. DANKERT, P.E.
ON: 22-JUN-2021 14:16

ALTERED BY:
ON:

STATE OF NEW YORK — BRIAN C. DANKERT — No. 092443 — LICENSED PROFESSIONAL ENGINEER

AS-BUILT REVISIONS
DESCRIPTION OF ALTERATIONS:

NY 78, TRANSIT ROAD, S.H. 1334A-1
FRENCH ROAD TO WEHRLE DRIVE
TOWNS OF CHEEKTOWAGA & LANCASTER
VILLAGE OF DEPEW
COUNTY: ERIE — REGION: 05

PIN 5813.61
NY 78
UTILITY QUALITY LEVEL D

BRIDGES

CULVERTS

ALL DIMENSIONS IN ft UNLESS OTHERWISE NOTED

TRAFFIC SIGNAL #50 (ERIE) PLAN

CONTRACT NUMBER D264571

DRAWING NO. TSP-33
SHEET NO. 195

IT IS A VIOLATION OF LAW FOR ANY PERSON, UNLESS THEY ARE ACTING UNDER THE DIRECTION OF A LICENSED PROFESSIONAL ENGINEER, ARCHITECT, LANDSCAPE ARCHITECT, OR LAND SURVEYOR, TO ALTER AN ITEM IN ANY WAY. IF AN ITEM BEARING THE STAMP OF A LICENSED PROFESSIONAL IS ALTERED, THE ALTERING ENGINEER, ARCHITECT, LANDSCAPE ARCHITECT, OR LAND SURVEYOR SHALL STAMP THE DOCUMENT AND INCLUDE THE NOTATION "ALTERED BY" FOLLOWED BY THEIR SIGNATURE, THE DATE OF SUCH ALTERATION, AND A SPECIFIC DESCRIPTION OF THE ALTERATION.

NEW YORK STATE OF OPPORTUNITY. Department of Transportation

DESIGN SUPERVISOR S. S. VAIDYA — JOB MANAGER R. F. SCHALLER — DESIGN KEITH A. GORECKI — CHECK BRIAN C. DANKERT — DRAFTING KEITH A. GORECKI — CHECK BRIAN C. DANKERT — PROJECT MANAGER S. S. VAIDYA

FILE NAME = 581361_CPH_TSP_LOC05_10.dgn
DATE/TIME = 22-JUN-2021 14:16
USER = kgorecki

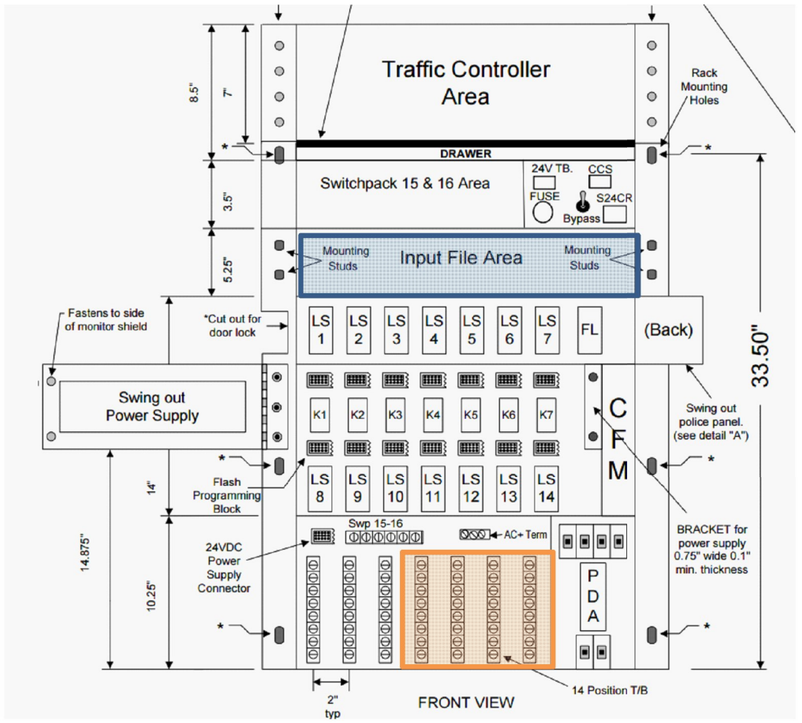

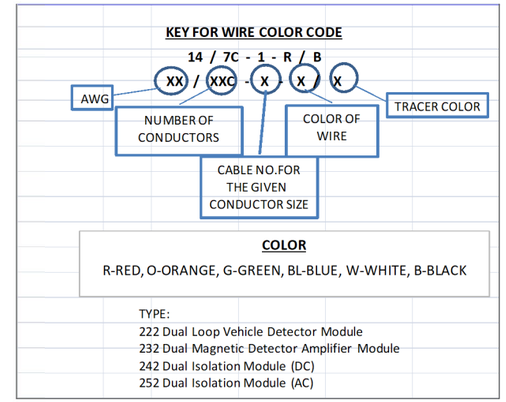

LOOP DETECTOR DATA TABLE

NO.	SIZE	NO. TURNS	WIRED	FUNCTION	206.03050005 (FT)	206.03060005 (FT)	680.53080305 (FT)	680.54 (FT)	680.72 (FT)	680.71 (FT)
18	6 x 6	4	PULSE	TRANSIT ROAD SB	-	7	7	96	258	319
19	6 x 6	4	PULSE	TRANSIT ROAD SB			7	80	226	319
20	6 x 6	4	PULSE	TRANSIT ROAD SB			7	69	204	319
21	6 x 6	4	PULSE	TRANSIT ROAD SB			7	60	186	319
22	6 x 6	4	PULSE	TRANSIT ROAD NB	3	-	0	88	234	452
23	6 x 6	4	PULSE	TRANSIT ROAD NB			0	79	216	452
24	6 x 6	4	PULSE	TRANSIT ROAD NB			0	68	194	452
25	6 x 6	4	PULSE	TRANSIT ROAD NB			0	58	178	452
26	6 x 6	4	PULSE	GENESEE STREET EB	-	2	2	93	242	325
27	6 x 6	4	PULSE	GENESEE STREET EB			2	81	218	325
28	6 x 6	4	PULSE	GENESEE STREET EB			2	69	194	325
29	6 x 6	4	PULSE	GENESEE STREET EB			2	57	170	325
TOTALS					3 FT	9 FT	36 FT	898 FT	2520 FT	4384 FT

STOP BAR DETECTION ACCOMPLISHED BY 360 DEGREE CAMERA.

AFFIX SEAL: BRIAN C. DANKERT, P.E.
ON: 22-JUN-2021 14:16

ALTERED BY:
ON:

STATE OF NEW YORK
BRIAN C. DANKERT
No. 092443
LICENSED PROFESSIONAL ENGINEER

AS-BUILT REVISIONS
DESCRIPTION OF ALTERATIONS:

NY 78, TRANSIT ROAD, S.H. 1334A-1
FRENCH ROAD TO WEHRLE DRIVE
TOWNS OF CHEEKTOWAGA & LANCASTER
VILLAGE OF DEPEW
COUNTY: ERIE REGION: 05

PIN 5813.61
NY 78
UTILITY QUALITY LEVEL D

BRIDGES

CULVERTS

ALL DIMENSIONS IN ft UNLESS OTHERWISE NOTED

TRAFFIC SIGNAL #50 (ERIE) PLAN

CONTRACT NUMBER
D264571

DRAWING NO. TSP-34
SHEET NO. 196

IT IS A VIOLATION OF LAW FOR ANY PERSON, UNLESS THEY ARE ACTING UNDER THE DIRECTION OF A LICENSED PROFESSIONAL ENGINEER, ARCHITECT, LANDSCAPE ARCHITECT, OR LAND SURVEYOR, TO ALTER AN ITEM IN ANY WAY. IF AN ITEM BEARING THE STAMP OF A LICENSED PROFESSIONAL IS ALTERED, THE ALTERING ENGINEER, ARCHITECT, LANDSCAPE ARCHITECT, OR LAND SURVEYOR SHALL STAMP THE DOCUMENT AND INCLUDE THE NOTATION "ALTERED BY" FOLLOWED BY THEIR SIGNATURE, THE DATE OF SUCH ALTERATION, AND A SPECIFIC DESCRIPTION OF THE ALTERATION.

NEW YORK STATE OF OPPORTUNITY. Department of Transportation

DESIGN SUPERVISOR S. S. VAIDYA JOB MANAGER R. F. SCHALLER DESIGN KEITH A. GORECKI CHECK BRIAN C. DANKERT DRAFTING KEITH A. GORECKI CHECK BRIAN C. DANKERT PROJECT MANAGER S. S. VAIDYA
FILE NAME = 581361_CPH_TSP_L0C05_11.dgn
DATE/TIME = 22-JUN-2021 14:16
USER = kgorecki

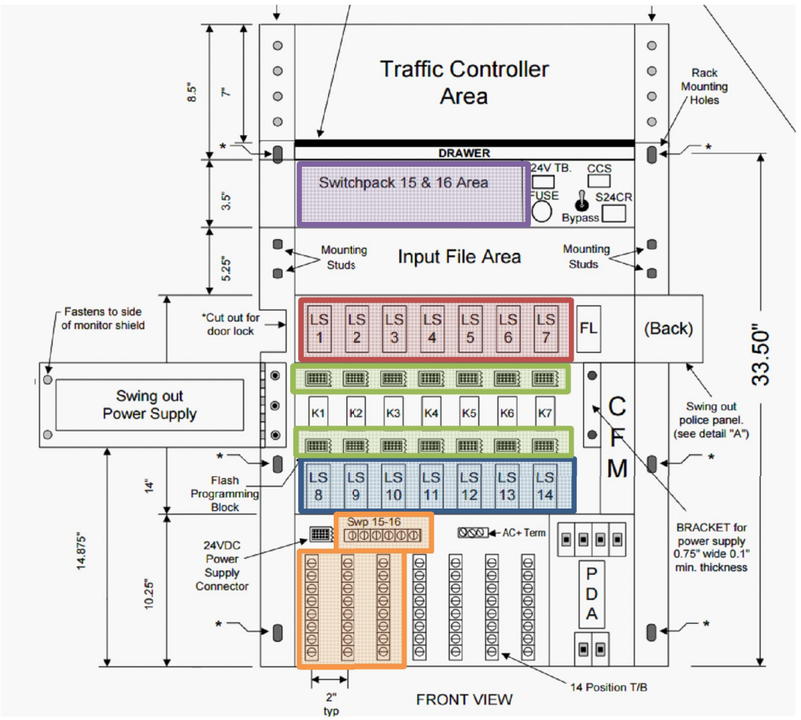

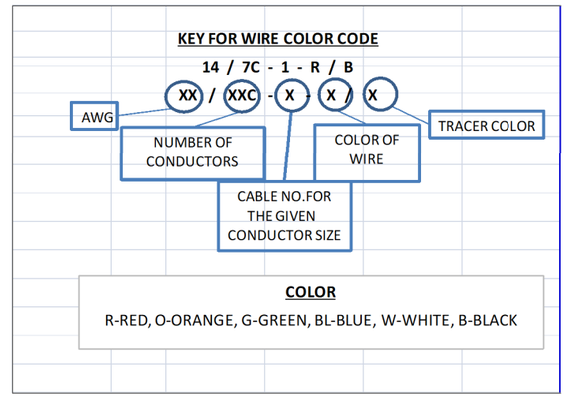

LEGEND

INDICATIONS					
G	= CIRCULAR GREEN	Y	= CIRCULAR YELLOW	R	= CIRCULAR RED
← G	= LEFT GREEN ARROW	← Y	= LEFT YELLOW ARROW	← R	= LEFT RED ARROW
→ G	= RIGHT GREEN ARROW	→ Y	= RIGHT YELLOW ARROW	→ R	= RIGHT RED ARROW
↑ G	= VERT. GREEN ARROW	← FY	= FLASHING YELLOW ARROW	WALK	=HAND/MAN
				DON'T WALK	=FLASHING HAD/COUNT DOWN TIMER
FLASH PLUG					
W	=DARK				
R	=FLASH RED				

SIGNAL OPERATIONS SPECIFICATIONS — DATE: 5/14/2021

TABLE OF SWITCH PACKS

	SIGNAL NUMBER		05-53-50				COUNTY	Erie	INTERSECTION	Rt 78 @ Rt 33		
	SWITCH PACK	FUNCTION (Φ#/OVLP)	FACE NUMBERS				FLASH PLUG	INDICATIONS	TERMINAL WIRING BOARD			
									TERMINAL	WIRE COLOR CODE PER FACE		
TOP ROW (LS1-LS7)	SP 1	OvLap 1 FYA	1				R	← R	SP 1R	14/7C-1-R		
								← Y	SP 1Y	14/7C-1-Y		
								← G	SP 1G	14/7C-1-G		
								GND. BAR	GND. BUS	14/7C-1-W		
	SP 2	Φ2	7	8			R	R	SP 2R	14/5C-7-R	14/5C-8-R	
								Y	SP 2Y	14/5C-7-Y	14/5C-8-Y	
								G	SP 2G	14/5C-7-G	14/5C-8-G	
								GND. WIRE	GND. BUS	14/5C-7-W	14/5C-8-W	
	SP 3	Φ3	9	10			R	← R	SP 3R	14/5C-9-R	14/5C-10-R	
								← Y	SP 3Y	14/5C-9-Y	14/5C-10-Y	
								← G	SP 3G	14/5C-9-G	14/5C-10-G	
								GND. WIRE	GND. BUS	14/5C-9-W	14/5C-10-W	
	SP 4	Φ4	15	16	17		R	R	SP 4R	14/5C-15-R	14/5C-16-R	14/7C-17-R
								Y	SP 4Y	14/5C-15-Y	14/5C-16-Y	14/7C-17-Y
								G	SP 4G	14/5C-15-G	14/5C-16-G	14/7C-17-G
								GND. WIRE	GND. BUS	14/5C-15-W	14/5C-16-W	14/7C-17-W
	SP 5	Φ5	5	6			R	← R	SP 5R	14/5C-5-R	14/5C-6-R	
								← Y	SP 5Y	14/5C-5-Y	14/5C-6-Y	
								← G	SP 5G	14/5C-5-G	14/5C-6-G	
								GND. WIRE	GND. BUS	14/5C-5-W	14/5C-6-W	
	SP 6	Φ6	2	3	4		R	R	SP 6R	14/5C-2-R	14/5C-3-R	14/7C-4-R
								Y	SP 6Y	14/5C-2-Y	14/5C-3-Y	14/7C-4-Y
								G	SP 6G	14/5C-2-G	14/5C-3-G	14/7C-4-G
								GND. WIRE	GND. BUS	14/5C-2-W	14/5C-3-W	14/7C-4-W
	SP 7	Φ7	13	14			R	← R	SP 7R	14/5C-13-R	14/5C-14-R	
								← Y	SP 7Y	14/5C-13-Y	14/5C-14-Y	
								← G	SP 7G	14/5C-13-G	14/5C-14-G	
								GND. WIRE	GND. BUS	14/5C-13-W	14/5C-14-W	
BOTTOM ROW (LS8-LS14)	SP 8	Φ8	11	12			R	R	SP 8R	14/5C-11-R	14/5C-12-R	
								Y	SP 8Y	14/5C-11-Y	14/5C-12-Y	
								G	SP 8G	14/5C-11-G	14/5C-12-G	
								GND. WIRE	GND. BUS	14/5C-11-W	14/5C-12-W	
	SP 9								SP 9R			
									SP 9Y			
									SP 9G			
								GND. WIRE	GND. BUS			
	SP 10	OvLap 4	17				W		SP 10R			
								→ Y	SP 10Y	14/7C-17-Y		
								→ G	SP 10G	14/7C-17-G		
								GND. WIRE	GND. BUS	14/7C-17-W		
	SP 11	OvLap 6	4				W		SP 11R			
								→ Y	SP 11Y	14/7C-4-Y		
								→ G	SP 11G	14/7C-4-G		
								GND. WIRE	GND. BUS	14/7C-4-W		
	SP 12								SP 12R			
									SP 12Y			
									SP 12G			
								GND. WIRE	GND. BUS			
SPECIAL	SP 13	Φ2 Ped w/FYA Output	W2.1	W2.2			W	DON'T WALK	SP 13R	14/5C-W2.1-R	14/5C-W2.2-R	
								← FY	SP 13Y	14/7C-1-BL		
								WALK	SP 13G	14/5C-W2.1-G	14/5C-W2.2-G	
								GND. WIRE	GND. BUS	14/5C-W2.1-W	14/5C-W2.2-W	
	SP 14	Φ4 Ped	W4.1	W4.2			W	DON'T WALK	SP 14R	14/5C-W4.1-R	14/5C-W4.2-R	
									SP 14Y			
								WALK	SP 14G	14/5C-W4.1-G	14/5C-W4.2-G	
								GND. WIRE	GND. BUS	14/5C-W4.1-W	14/5C-W4.2-W	
	SP 15	Φ6 Ped	W6.1	W6.2			W	DON'T WALK	SP 15R	14/5C-W6.1-R	14/5C-W6.2-R	
									SP 15Y			
								WALK	SP 15G	14/5C-W6.1-G	14/5C-W6.2-G	
								GND. WIRE	GND. BUS	14/5C-W6.1-W	14/5C-W6.2-W	
	SP 16	Φ8 Ped	W8.1	W8.2			W	DON'T WALK	SP 16R	14/5C-W8.1-R	14/5C-W8.2-R	
									SP 16Y			
								WALK	SP 16G	14/5C-W8.1-G	14/5C-W8.2-G	
								GND. WIRE	GND. BUS	14/5C-W8.1-W	14/5C-W8.2-W	

AFFIX SEAL: BRIAN C. DANKERT, P.E.
ON: 22-JUN-2021 14:16

ALTERED BY:
ON:

AS-BUILT REVISIONS
DESCRIPTION OF ALTERATIONS:

NY 78, TRANSIT ROAD, S.H. 1334A-1
FRENCH ROAD TO WEHRLE DRIVE
TOWNS OF CHEEKTOWAGA & LANCASTER
VILLAGE OF DEPEW
COUNTY: ERIE — REGION: 05

PIN 5813.61
NY 78
UTILITY QUALITY LEVEL D

BRIDGES

CULVERTS

ALL DIMENSIONS IN ft UNLESS OTHERWISE NOTED

TRAFFIC SIGNAL #50 (ERIE) PLAN

CONTRACT NUMBER D264571

DRAWING NO. TSP-35
SHEET NO. 197

IT IS A VIOLATION OF LAW FOR ANY PERSON, UNLESS THEY ARE ACTING UNDER THE DIRECTION OF A LICENSED PROFESSIONAL ENGINEER, ARCHITECT, LANDSCAPE ARCHITECT, OR LAND SURVEYOR, TO ALTER AN ITEM IN ANY WAY. IF AN ITEM BEARING THE STAMP OF A LICENSED PROFESSIONAL IS ALTERED, THE ALTERING ENGINEER, ARCHITECT, LANDSCAPE ARCHITECT, OR LAND SURVEYOR SHALL STAMP THE DOCUMENT AND INCLUDE THE NOTATION "ALTERED BY" FOLLOWED BY THEIR SIGNATURE, THE DATE OF SUCH ALTERATION, AND A SPECIFIC DESCRIPTION OF THE ALTERATION.

NEW YORK STATE OF OPPORTUNITY. Department of Transportation

DESIGN SUPERVISOR S. S. VAIDYA — JOB MANAGER R. F. SCHALLER — DESIGN KEITH A. GORECKI — CHECK BRIAN C. DANKERT — DRAFTING KEITH A. GORECKI — CHECK BRIAN C. DANKERT — PROJECT MANAGER S. S. VAIDYA

FILE NAME = 581361_CPH_TSP_LOC05.12.dgn
DATE/TIME = 22-JUN-2021 14:16
USER = kgorecki

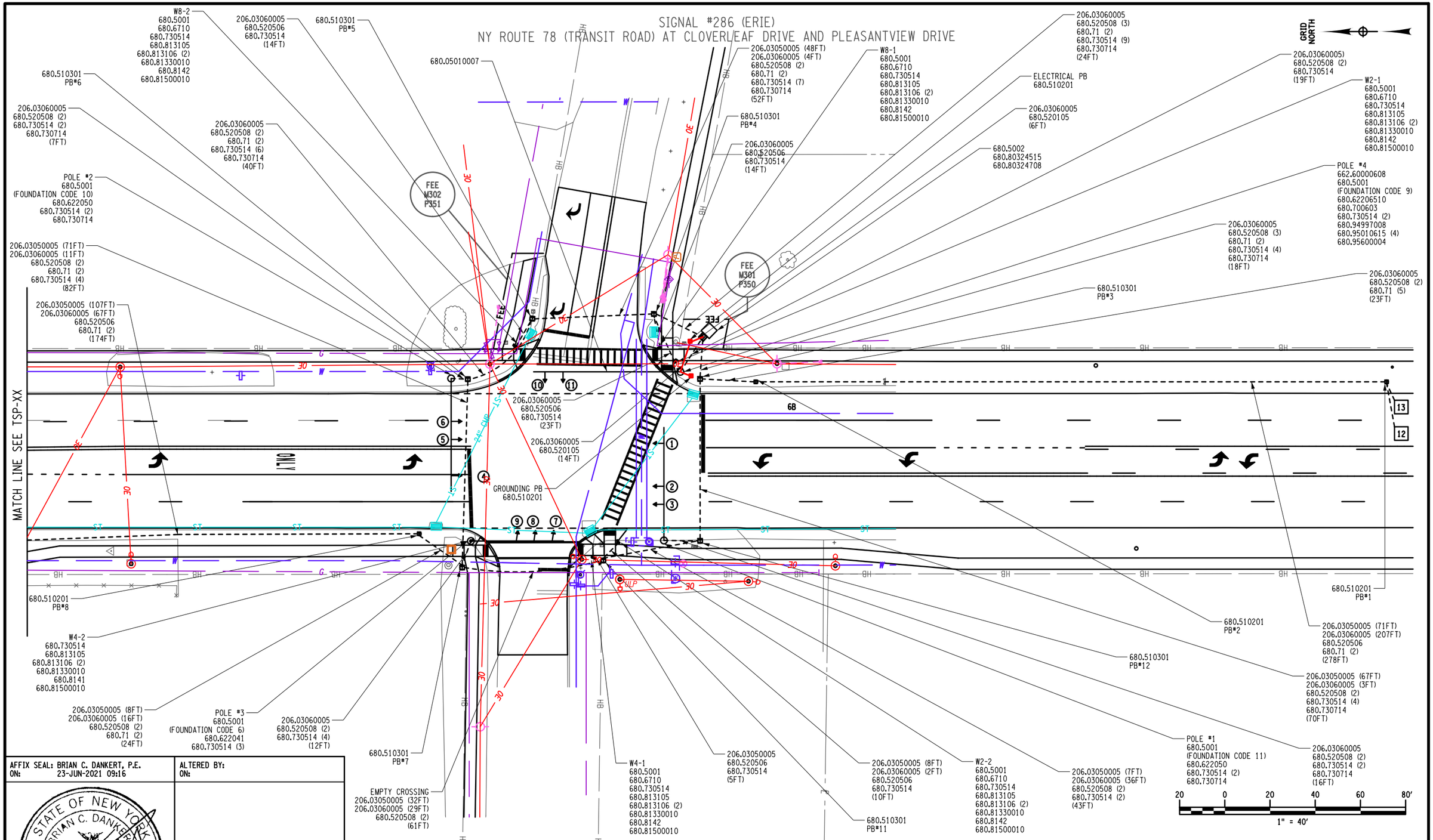

PROJECT MANAGER S. S. VAIDYA
CHECK BRIAN C. DANKERT
DRAFTING KEITH A. GORECKI
CHECK BRIAN C. DANKERT
DESIGN KEITH A. GORECKI
JOB MANAGER R. F. SCHALLER
DESIGN SUPERVISOR S. S. VAIDYA

FILE NAME = 581361_CPH_TSP_LOC06_1.dgn
DATE/TIME = 23-JUN-2021 09:16
USER = kgorecki

AFFIX SEAL: BRIAN C. DANKERT, P.E.
ON: 23-JUN-2021 09:16

STATE OF NEW YORK
BRIAN C. DANKERT
No. 092443
LICENSED PROFESSIONAL ENGINEER

ALTERED BY:
ON:

AS-BUILT REVISIONS
DESCRIPTION OF ALTERATIONS:

NY 78, TRANSIT ROAD, S.H. 1334A-1
FRENCH ROAD TO WEHRLE DRIVE
TOWNS OF CHEEKTOWAGA & LANCASTER
VILLAGE OF DEPEW
COUNTY: ERIE REGION: 05

PIN 5813.61
NY 78
UTILITY QUALITY LEVEL D

BRIDGES

CULVERTS

ALL DIMENSIONS IN ft UNLESS OTHERWISE NOTED

TRAFFIC SIGNAL #286 (ERIE) PLAN

CONTRACT NUMBER
D264571

DRAWING NO. TSP-36
SHEET NO. 198

IT IS A VIOLATION OF LAW FOR ANY PERSON, UNLESS THEY ARE ACTING UNDER THE DIRECTION OF A LICENSED PROFESSIONAL ENGINEER, ARCHITECT, LANDSCAPE ARCHITECT, OR LAND SURVEYOR, TO ALTER AN ITEM IN ANY WAY. IF AN ITEM BEARING THE STAMP OF A LICENSED PROFESSIONAL IS ALTERED, THE ALTERING ENGINEER, ARCHITECT, LANDSCAPE ARCHITECT, OR LAND SURVEYOR SHALL STAMP THE DOCUMENT AND INCLUDE THE NOTATION "ALTERED BY" FOLLOWED BY THEIR SIGNATURE, THE DATE OF SUCH ALTERATION, AND A SPECIFIC DESCRIPTION OF THE ALTERATION.

NEW YORK STATE OF OPPORTUNITY. Department of Transportation

SIGNAL #286 (ERIE)
NY ROUTE 78 (TRANSIT ROAD) AT CLOVERLEAF DRIVE AND PLEASANTVIEW DRIVE

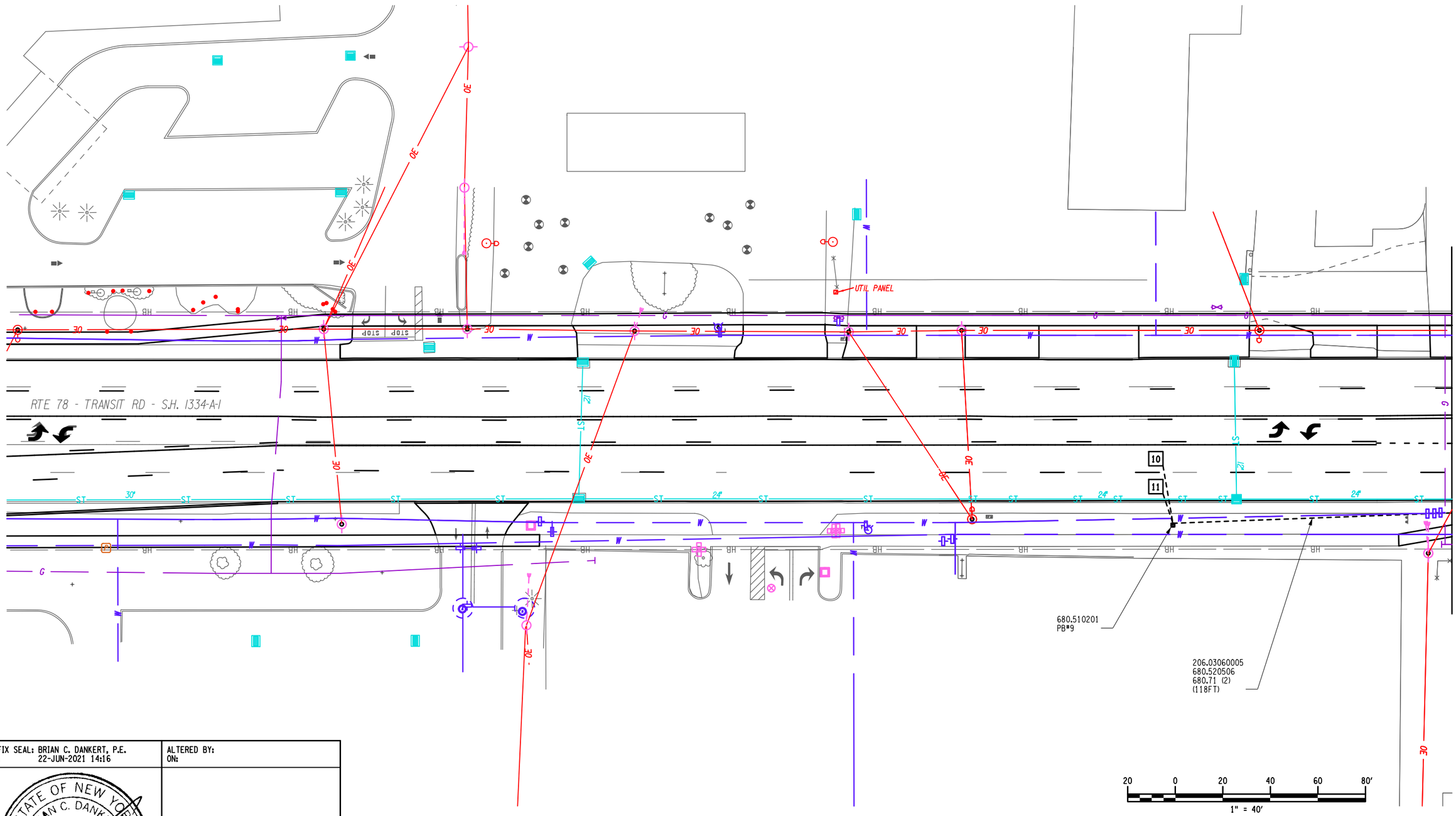

PROJECT MANAGER S. S. VAIDYA
CHECK BRIAN C. DANKERT
DRAFTING KEITH A. GORECKI
CHECK BRIAN C. DANKERT
DESIGN KEITH A. GORECKI
JOB MANAGER R. F. SCHALLER
DESIGN SUPERVISOR S. S. VAIDYA

FILE NAME = 581361_CPH_TSP_LOC06_2.dgn
DATE/TIME = 22-JUN-2021 14:16
USER = kgorecki

AFFIX SEAL: BRIAN C. DANKERT, P.E.
ON: 22-JUN-2021 14:16

ALTERED BY:
ON:

STATE OF NEW YORK
BRIAN C. DANKERT
No. 092413
LICENSED PROFESSIONAL ENGINEER

AS-BUILT REVISIONS
DESCRIPTION OF ALTERATIONS:

NY 78, TRANSIT ROAD, S.H. 1334A-1
FRENCH ROAD TO WEHRLE DRIVE
TOWNS OF CHEEKTOWAGA & LANCASTER
VILLAGE OF DEPEW
COUNTY: ERIE REGION: 05

PIN 5813.61
NY 78
UTILITY QUALITY LEVEL D

BRIDGES

CULVERTS

ALL DIMENSIONS IN ft UNLESS OTHERWISE NOTED

TRAFFIC SIGNAL #286 (ERIE) PLAN

CONTRACT NUMBER
D264571

DRAWING NO. TSP-37
SHEET NO. 199

IT IS A VIOLATION OF LAW FOR ANY PERSON, UNLESS THEY ARE ACTING UNDER THE DIRECTION OF A LICENSED PROFESSIONAL ENGINEER, ARCHITECT, LANDSCAPE ARCHITECT, OR LAND SURVEYOR, TO ALTER AN ITEM IN ANY WAY. IF AN ITEM BEARING THE STAMP OF A LICENSED PROFESSIONAL IS ALTERED, THE ALTERING ENGINEER, ARCHITECT, LANDSCAPE ARCHITECT, OR LAND SURVEYOR SHALL STAMP THE DOCUMENT AND INCLUDE THE NOTATION "ALTERED BY" FOLLOWED BY THEIR SIGNATURE, THE DATE OF SUCH ALTERATION, AND A SPECIFIC DESCRIPTION OF THE ALTERATION.

NEW YORK STATE OF OPPORTUNITY. Department of Transportation

SIGNAL #286 (ERIE)
NY ROUTE 78 (TRANSIT ROAD) AT CLOVERLEAF DRIVE AND PLEASANTVIEW DRIVE

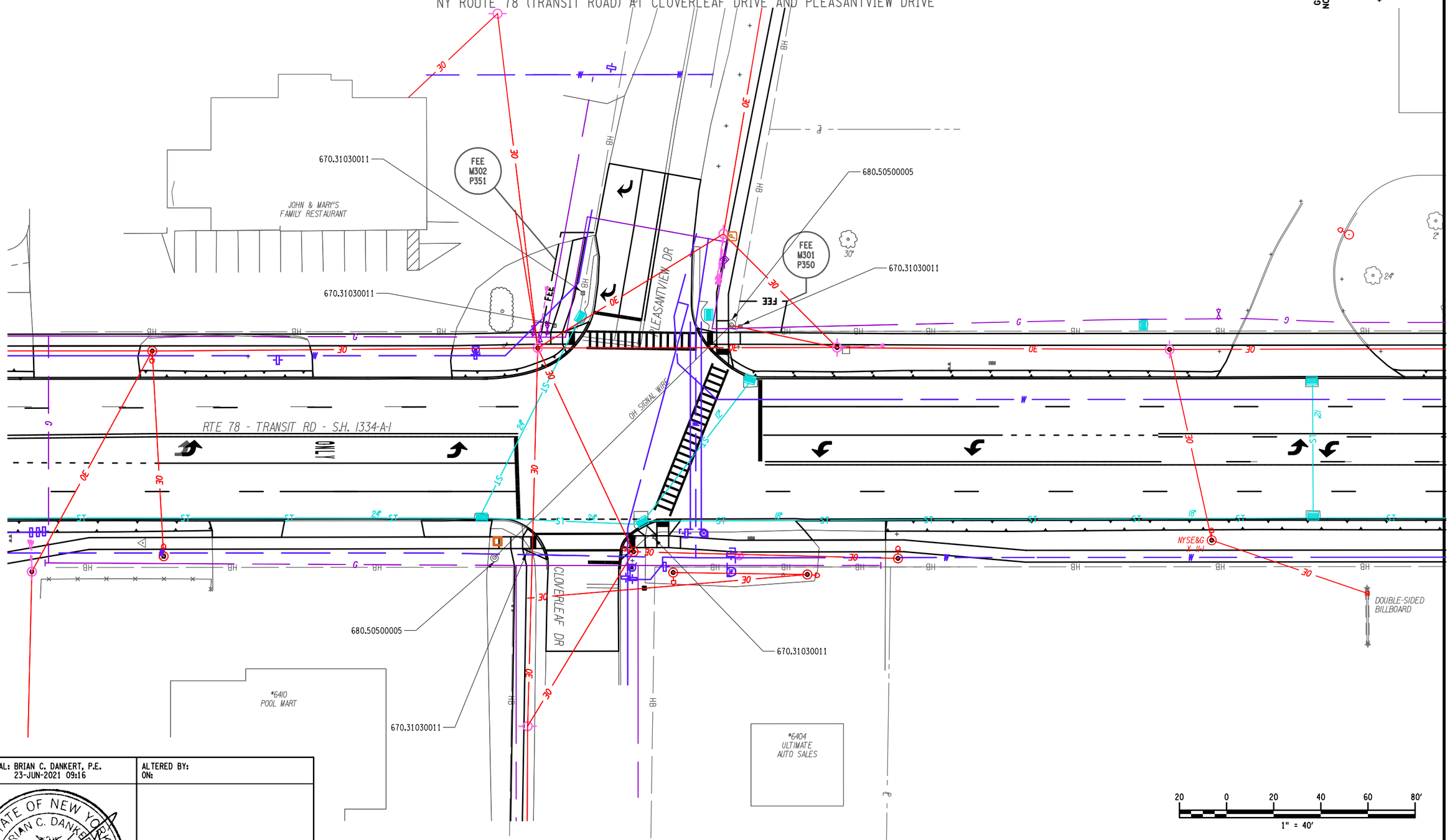

AFFIX SEAL: BRIAN C. DANKERT, P.E.
ON: 23-JUN-2021 09:16

ALTERED BY:
ON:

STATE OF NEW YORK · BRIAN C. DANKERT · No. 092413 · LICENSED PROFESSIONAL ENGINEER

AS-BUILT REVISIONS
DESCRIPTION OF ALTERATIONS:

NY 78, TRANSIT ROAD, S.H. 1334A-1
FRENCH ROAD TO WEHRLE DRIVE
TOWNS OF CHEEKTOWAGA & LANCASTER
VILLAGE OF DEPEW
COUNTY: ERIE REGION: 05

PIN 5813.61
NY 78
UTILITY QUALITY LEVEL D

BRIDGES

CULVERTS

ALL DIMENSIONS IN ft UNLESS OTHERWISE NOTED

TRAFFIC SIGNAL #286 (ERIE) PLAN

CONTRACT NUMBER
D264571

DRAWING NO. TSP-38
SHEET NO. 200

IT IS A VIOLATION OF LAW FOR ANY PERSON, UNLESS THEY ARE ACTING UNDER THE DIRECTION OF A LICENSED PROFESSIONAL ENGINEER, ARCHITECT, LANDSCAPE ARCHITECT, OR LAND SURVEYOR, TO ALTER AN ITEM IN ANY WAY. IF AN ITEM BEARING THE STAMP OF A LICENSED PROFESSIONAL IS ALTERED, THE ALTERING ENGINEER, ARCHITECT, LANDSCAPE ARCHITECT, OR LAND SURVEYOR SHALL STAMP THE DOCUMENT AND INCLUDE THE NOTATION "ALTERED BY" FOLLOWED BY THEIR SIGNATURE, THE DATE OF SUCH ALTERATION, AND A SPECIFIC DESCRIPTION OF THE ALTERATION.

NEW YORK STATE OF OPPORTUNITY. Department of Transportation

DESIGN SUPERVISOR S. S. VAIDYA
JOB MANAGER R. F. SCHALLER
DESIGN KEITH A. GORECKI
CHECK BRIAN C. DANKERT
DRAFTING KEITH A. GORECKI
CHECK BRIAN C. DANKERT
PROJECT MANAGER S. S. VAIDYA

FILE NAME = 581361_CPH_TSP_10006_3.dgn
DATE/TIME = 23-JUN-2021 09:16
USER = kgorecki

LOCATION 6 - NYSDOT TRAFFIC SIGNAL #286 (ERIE)
NY ROUTE 78 (TRANSIT ROAD) AT PLEASANT VIEW DRIVE AND CLOVERLEAF DRIVE

QUANTITY AND ITEM LIST

SIGNAL #286 (ERIE) - NY ROUTE 78 (TRANSIT ROAD) AT PLEASANT VIEW DRIVE AND CLOVERLEAF DRIVE

ITEM NO.	DESCRIPTION	UNIT	QTY
206.03050005	CONDUIT EXCAV & BACKFILL (IN ROADWAY)	FT	444
206.03060005	CONDUIT EXCAV & BACKFILL (NOT IN ROADWAY)	FT	735
619.1611	MAINTAIN TRAFFIC SIGNAL EQUIPMENT (REQ A)	MO	8
645.61	OVERHEAD SIGN PANELS	SF	300
662.60000608	FURNISHING ELECTRICAL SERVICE	DC	1
670.31030011	ABANDON EXISTING PULLBOX WITH SUITABLE MATERIAL	EA	5
680.05010007	360 DEGREE CAMERA VIDEO DETECTION SYSTEM	EA	1
680.50500005	REMOVE EXISTING FOUNDATION	FT	2
680.5001	POLE EXCAVATION AND CONCRETE FOUNDATION	CY	19
680.5002	CONCRETE BASE FOR CONTROLLER CABINET	EA	1
680.510201	PULLBOX-CIRCULAR, 18" IN DIA., REINFORCED CONCRETE	EA	6
680.510301	PULLBOX-CIRCULAR, 24" IN DIA., REINFORCED CONCRETE	EA	7
680.520105	CONDUIT, STEEL, ZINC COATED, 1-1/2"	FT	20
680.520506	CONDUIT, RIGID PLASTIC, CLASS 1 , 2 NPS	FT	636
680.520508	CONDUIT, RIGID PLASTIC, CLASS 1 , 3 NPS	FT	1024
680.53080305	CONDUIT, FLEX-TIGHT NON-METAL, 1NPS	FT	39
680.54	INDUCTANCE LOOP INSTALLATION	FT	366
680.622041	SIGNAL POLE-MAST ARM 20' MTD HEIGHT, 41' ARM	EA	1
680.622050	SIGNAL POLE-MAST ARM 20' MTD HEIGHT, 50' ARM	EA	2
680.62206510	SIGNAL POLE-MAST ARM 20' MTD HEIGHT, 65' ARM, FATIGUE DESIGN	EA	1
680.6710	SIGNAL POLE-POST TOP MOUNT 10' MTD HEIGHT	EA	5
680.700603	RISER ASSEMBLY, 1" DIA.	EA	1
680.71	SHIELDED LEAD-IN CABLE	FT	1708
680.72	INDUCTANCE LOOP WIRE	FT	430
680.730514	SIGNAL CABLE, 5 CONDUCTOR, 14 AWG	FT	2640
680.730714	SIGNAL CABLE, 7 CONDUCTOR, 14 AWG	FT	378
680.79000605	REMOVE TRAFFIC SIGNAL INSTALLATION, LOCATION 6	ELOC	1
680.80324515	INSTALL MICROCOMPUTER CABINET	EA	1
680.80324708	MICROCOMPUTER CABINET BASE (ALUMINUM)	EA	1
680.810101	SIGNAL MODULE - 12 IN, RED BALL LED	EA	9
680.810102	SIGNAL MODULE - 12 IN, RED ARROW LED	EA	2
680.810103	SIGNAL MODULE - 12 IN, YELLOW BALL LED	EA	9
680.810104	SIGNAL MODULE - 12 IN, YELLOW ARROW LED	EA	4
680.810105	SIGNAL MODULE - 12 IN, GREEN BALL LED	EA	9
680.810106	SIGNAL MODULE - 12 IN, GREEN ARROW LED	EA	2
680.810601	SIGNAL SECTION, POLYCARBONITE, TYPE 1, 12IN	EA	35
680.8111	TRAFFIC SIGNAL BRACKET ASSEMBLY - 1 WAY	EA	11
680.813105	PEDESTRIAN SIGNAL MODULE 12IN, BI-MODAL HAND/MAN	EA	6
680.813106	PEDESTRIAN SIGNAL SECTION - POLYCARBONITE, TYPE 1, 12IN.	EA	12
680.81330010	AUDIBLE PEDESTRIAN SIGNAL	EA	6
680.8141	PEDESTRIAN SIGNAL BRACKET MOUNT ASSEMBLY	EA	1
680.8142	PEDESTRIAN SIGNAL TOP MOUNT ASSEMBLY	EA	5
680.81500010	PEDESTRIAN COUNT DOWN TIMER	EA	6
680.81990003	ALUMINUM TRAFFIC SIGNAL HEAD BACK PLATES W/ YELLOW STRIPES	EA	11
680.8205	OVERHEAD SIGN ASSEMBLY, TYPE E	EA	2
680.94997008	F AND I ELECTRICAL DISCONNECT GEN. TRAN SWITCH	EA	1
680.95010615	SERVICE CABLE, 1 CONDUCTOR, 6 AWG	FT	160
680.95600004	ELECTRICAL METER PAN	EA	1

1.) EXISTING PULLBOX LOCATIONS ON PLANS ARE SHOWN BASED ON RECORD PLANS. ACTUAL FIELD LOCATIONS MAY VARY.

2.) ITEM 680.79000605, "REMOVE TRAFFIC SIGNAL INSTALLATION, LOCATION 6" SHALL INCLUDE THE REMOVAL OF THE EXISTING TRAFFIC SIGNAL EQUIPMENT LISTED BELOW. ALL EQUIPMENT LISTED SHALL BE DISPOSED OF AND ONLY LED SERIAL NUMBERS SHALL BE RECORDED AND GIVEN TO NYSDOT TRAFFIC SIGNAL MAINTENANCE CREW.

- ALL EXISTING TRAFFIC SIGNAL EQUIPMENT

SIGNAL HEAD DATA TABLE

FACE \ ITEM	680.810101	680.810102	680.810103	680.810104	680.810105	680.810106	680.810601	680.8111	680.81990003
1	-	1	-	2	-	1	4	1	1
2	1	-	1	-	1	-	3	1	1
3	1	-	1	-	1	-	3	1	1
4	-	1	-	2	-	1	4	1	1
5	1	-	1	-	1	-	3	1	1
6	1	-	1	-	1	-	3	1	1
7	1	-	1	-	1	-	3	1	1
8	1	-	1	-	1	-	3	1	1
9	1	-	1	-	1	-	3	1	1
10	1	-	1	-	1	-	3	1	1
11	1	-	1	-	1	-	3	1	1
TOTALS	**9 EA**	**2 EA**	**9 EA**	**4 EA**	**9 EA**	**2 EA**	**35 EA**	**11 EA**	**11 EA**

SIGNAL HEAD LAYOUT

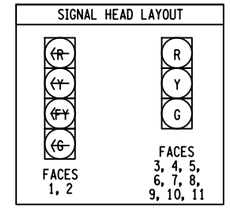

KEY

R - RED BALL
Y - YELLOW BALL
G - GREEN BALL
(R - RED ARROW
(Y - YELLOW ARROW
(FY - FLASHING YELLOW ARROW
(G - GREEN ARROW

TRAFFIC SIGNAL #286 (ERIE)	
POWER SUPPLIER:	
NEW METER #:	
NEW ACCOUNT #:	
BILLING TO:	

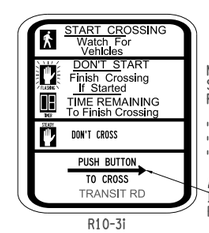

R10-3i

NEW PEDESTRIAN SIGNS SHALL BE SIGN NUMBER R10-3i FROM THE MUTCD.

"TRANSIT RD" FOR W2-1, W2-2
"CLOVERLEAF DR" FOR W4-1 & W4-2
"PLEASANT VIEW" FOR W8-1 & W8-2

ARROW MAY FACE LEFT OR RIGHT, IT IS CONTRACTORS RESPONSIBILITY FOR PROPER ARROW ORIENTATION.

AUDIBLE WIRING NOTE:

THE COST TO FURNISH AND INSTALL WIRING BETWEEN THE AUDIBLE PEDESTRIAN SIGNAL (APS) UNITS AND THEIR RESPECTIVE CONTROL UNITS MOUNTED IN THE PED. HEADS SHALL BE INCLUDED UNDER PROVISIONS OF ITEM 680.81330010.

THE MANUFACTURER'S SUGGESTED CABLES FOR USE WITH AUDIBLE PEDESTRIAN SIGNAL UNITS ARE BELDEN 8489 FOR ABOVE GROUND.

BELDEN 8489, OR EQUIVALENT, SHALL BE USED WITH 680.81330010.

REFER TO "EZCOMMUNICATOR 4 WIRE NAVIGATOR APS SYSTEM INSTALLATION MANUAL" FOR MANUFACTURER'S INSTALLATION DETAILS AND PROCEDURES.

AFFIX SEAL: BRIAN C. DANKERT, P.E.
ON: 22-JUN-2021 14:17

ALTERED BY:
ON:

AS-BUILT REVISIONS
DESCRIPTION OF ALTERATIONS:

NY 78, TRANSIT ROAD, S.H. 1334A-1
FRENCH ROAD TO WEHRLE DRIVE
TOWNS OF CHEEKTOWAGA & LANCASTER
VILLAGE OF DEPEW
COUNTY: ERIE REGION: 05

PIN 5813.61
NY 78
UTILITY QUALITY LEVEL D

BRIDGES

CULVERTS

ALL DIMENSIONS IN ft UNLESS OTHERWISE NOTED

TRAFFIC SIGNAL #286 (ERIE) PLAN

CONTRACT NUMBER D264571

DRAWING NO. TSP-39
SHEET NO. 201

IT IS A VIOLATION OF LAW FOR ANY PERSON, UNLESS THEY ARE ACTING UNDER THE DIRECTION OF A LICENSED PROFESSIONAL ENGINEER, ARCHITECT, LANDSCAPE ARCHITECT, OR LAND SURVEYOR, TO ALTER AN ITEM IN ANY WAY. IF AN ITEM BEARING THE STAMP OF A LICENSED PROFESSIONAL IS ALTERED, THE ALTERING ENGINEER, ARCHITECT, LANDSCAPE ARCHITECT, OR LAND SURVEYOR SHALL STAMP THE DOCUMENT AND INCLUDE THE NOTATION "ALTERED BY" FOLLOWED BY THEIR SIGNATURE, THE DATE OF SUCH ALTERATION, AND A SPECIFIC DESCRIPTION OF THE ALTERATION.

NEW YORK STATE OF OPPORTUNITY. Department of Transportation

PROJECT MANAGER S. S. VAIDYA
CHECK BRIAN C. DANKERT
DRAFTING KEITH A. GORECKI
CHECK BRIAN C. DANKERT
DESIGN KEITH A. GORECKI
JOB MANAGER R. F. SCHALLER
DESIGN SUPERVISOR S. S. VAIDYA
FILE NAME = 581361_CPH_TSP_LOC06_4.dgn
DATE/TIME = 22-JUN-2021 14:17
USER = kgorecki

LOCATION 6 - NYSDOT TRAFFIC SIGNAL #286 (ERIE)
NY ROUTE 78 (TRANSIT ROAD) AT PLEASANT VIEW DRIVE AND CLOVERLEAF DRIVE

581361 - NY 78 (TRANSIT RD); FRENCH RD to ELLICOTT CREEK

05-53-286

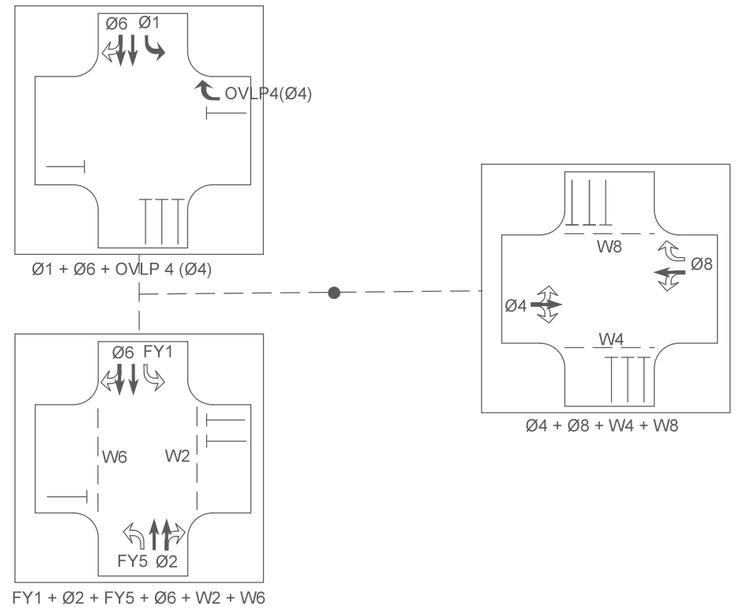

N

Ø1 - SB LEFT (TRANSIT RD, RTE. 78)
Ø2 - NB THROUGH/RIGHT (TRANSIT RD, RTE. 78)
Ø4 - EB THROUGH/RIGHT (CLOVERLEAF DR)
Ø8 - WB THROUGH/RIGHT/LEFT (PLEASANT VIEW DR)

OVLP 4 (Ø4) - EB RIGHT (PLEASANT VIEW DR)
FY1 - OVLP 1 (Ø1) - SB LEFT (TRANSIT RD, RTE. 78)
FY5 - OVLP 5 (Ø5) - NB LEFT (TRANSIT RD, RTE. 78)

W2 - WB APPROACH PEDESTRIAN CROSSING
W4 - NB APPROACH PEDESTRIAN CROSSING
W6 - EB APPROACH PEDESTRIAN CROSSING
W8 - SB APPROACH PEDESTRIAN CROSSING

2/3/2020

AFFIX SEAL: BRIAN C. DANKERT, P.E.
ON: 22-JUN-2021 14:17

ALTERED BY:
ON:

STATE OF NEW YORK
BRIAN C. DANKERT
No. 092443
LICENSED PROFESSIONAL ENGINEER

AS-BUILT REVISIONS
DESCRIPTION OF ALTERATIONS:

NY 78, TRANSIT ROAD, S.H. 1334A-1
FRENCH ROAD TO WEHRLE DRIVE
TOWNS OF CHEEKTOWAGA & LANCASTER
VILLAGE OF DEPEW
COUNTY: ERIE REGION: 05

PIN 5813.61
NY 78
UTILITY QUALITY LEVEL D

BRIDGES

CULVERTS

ALL DIMENSIONS IN ft UNLESS OTHERWISE NOTED

TRAFFIC SIGNAL #286 (ERIE) PLAN

CONTRACT NUMBER
D264571

DRAWING NO. TSP-40
SHEET NO. 202

IT IS A VIOLATION OF LAW FOR ANY PERSON, UNLESS THEY ARE ACTING UNDER THE DIRECTION OF A LICENSED PROFESSIONAL ENGINEER, ARCHITECT, LANDSCAPE ARCHITECT, OR LAND SURVEYOR, TO ALTER AN ITEM IN ANY WAY. IF AN ITEM BEARING THE STAMP OF A LICENSED PROFESSIONAL IS ALTERED, THE ALTERING ENGINEER, ARCHITECT, LANDSCAPE ARCHITECT, OR LAND SURVEYOR SHALL STAMP THE DOCUMENT AND INCLUDE THE NOTATION "ALTERED BY" FOLLOWED BY THEIR SIGNATURE, THE DATE OF SUCH ALTERATION, AND A SPECIFIC DESCRIPTION OF THE ALTERATION.

NEW YORK STATE OF OPPORTUNITY. Department of Transportation

DESIGN SUPERVISOR S. S. VAIDYA JOB MANAGER R. F. SCHALLER DESIGN KEITH A. GORECKI CHECK BRIAN C. DANKERT DRAFTING KEITH A. GORECKI CHECK BRIAN C. DANKERT PROJECT MANAGER S. S. VAIDYA

FILE NAME = 581361_CPH_TSP_LOC06_5.dgn
DATE/TIME = 22-JUN-2021 14:17
USER = kgorecki

LOCATION 6 - NYSDOT TRAFFIC SIGNAL #286 (ERIE)
NY ROUTE 78 (TRANSIT ROAD) AT PLEASANT VIEW DRIVE AND CLOVERLEAF DRIVE

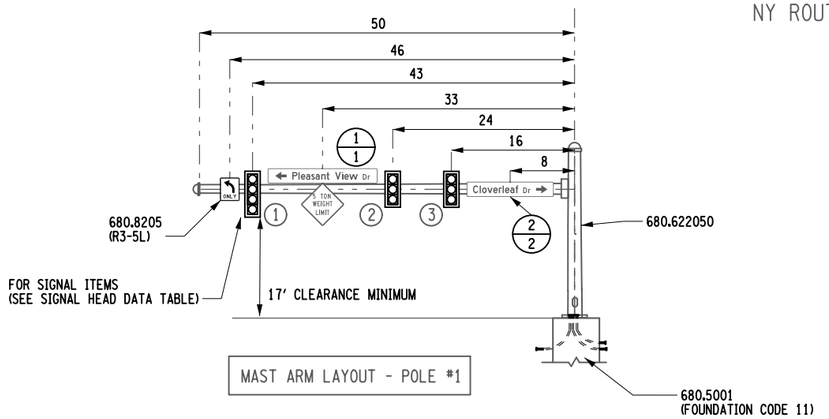

MAST ARM LAYOUT - POLE #1

SIGN FACE DATA TABLE		
ITEM	DESCRIPTION	QTY
680.8205	OVERHEAD SIGN ASSEMBLY, TYPE E	2
2 EACH SIZE 30" X 36"		
	R3-5L	

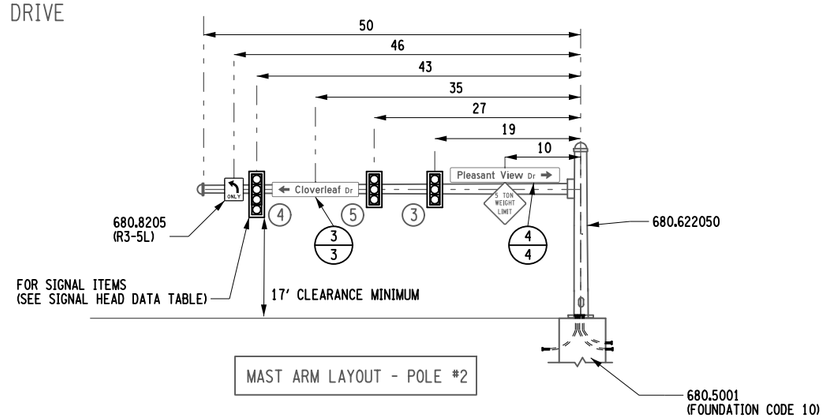

MAST ARM LAYOUT - POLE #2

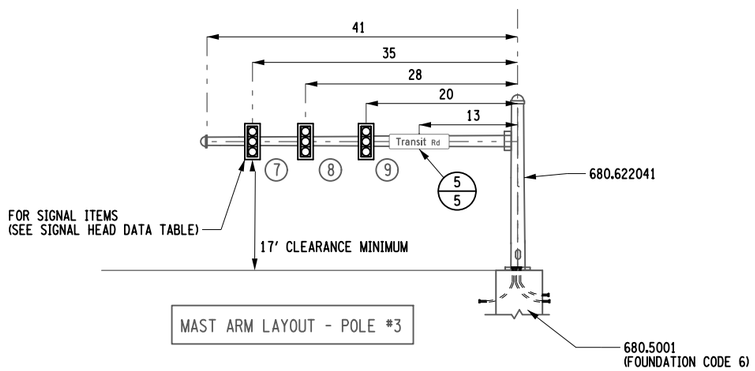

MAST ARM LAYOUT - POLE #3

SIGN FACE DATA TABLE		
ITEM	DESCRIPTION	QTY
645.61	OVERHEAD SIGN PANELS	32 S.F.
2 EACH 16 S.F. SIZE 48" X 48"		
	NYW3-30	

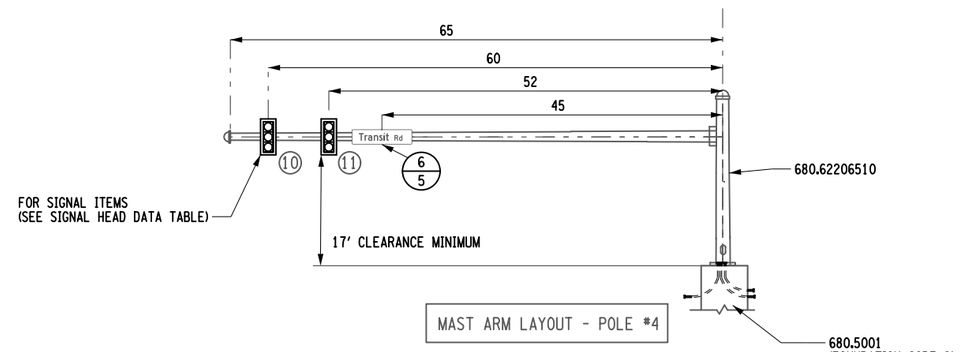

MAST ARM LAYOUT - POLE #4

NOTES:

1) CONDUIT ORIENTATION SHOWN MAY DIFFER FROM REQUIRED ORIENTATION. FIELD VERIFY BEFORE CONDUIT INSTALLATION.

2) DISTANCES SHOWN ARE APPROXIMATE. SIGNAL HEADS AND SIGNS MAY BE ADJUSTED IN THE FIELD WITH APPROVAL OF EIC.

3) POWER METER AND DISCONNECT/TRANSFER SWITCH SHALL BE INSTALLED AS PER STANDARD SHEET 680-05.

4) CONTRACTOR IS RESPONSIBLE THAT POWER METER IS AT A HEIGHT THAT COMPLIES WITH ALL REQUIREMENTS AND ELECTRICAL CODES AS PUT FORTH BY ELECTRICAL UTILITY SUPPLIER.

TEXT NUMBER	LOCATION NUMBER	ITEM NUMBER	PAYMENT FACTOR	TOTAL QUANTITY	TEXT WxH (in)		M.U.T.C.D. NUMBER	MOUNT
1	1 [1]	645.61	58.00 sf	58.00 sf	← Pleasant View Dr BACK TO BACK Pleasant View Dr →	174 X 24	D3-1	OH MTD
2	2 [1]	645.61	46.00 sf	46.00 sf	Cloverleaf Dr → BACK TO BACK ← Cloverleaf Dr	138 X 24	D3-1	OH MTD
3	3 [1]	645.61	46.00 sf	46.00 sf	← Cloverleaf Dr BACK TO BACK Cloverleaf Dr →	138 X 24	D3-1	OH MTD
4	4 [1]	645.61	58.00 sf	58.00 sf	Pleasant View Dr → BACK TO BACK ← Pleasant View Dr	174 X 24	D3-1	OH MTD
5	5, 6 [2]	645.61	30.00 sf	60.00 sf	Transit Rd BACK TO BACK Transit Rd	90 X 24	D3-1	OH MTD

LEGEND

- NEW SIGN LOCATION
- REMOVAL LOCATION
- SIGN TO REMAIN
- RELOCATE TO POSITION SHOWN

"L" - LOCATION NUMBER
"T" - TEXT NUMBER

LEGEND	
SYMBOL	DESCRIPTION
GR MTD	GROUND MOUNTED
OH MTD	OVERHEAD MOUNTED
BR MTD	BRIDGE MOUNTED
PO MTD	POLE MOUNTED
	BACK TO BACK

GENERAL NOTES:

1. SIGN LOCATIONS AS SHOWN ON PLANS ARE APPROXIMATE. THE CONTRACTOR SHALL RELOCATE EXISTING SIGNS AND INSTALL NEW SIGNS IN ACCORDANCE WITH THE MUTCD AND NYS SUPPLEMENT. THE EIC SHOULD CONTACT THE REGIONAL TRAFFIC ENGINEERING AND SAFETY GROUP WITH QUESTIONS.

2. THE PAYMENT FACTORS FOR SIGNS ARE FROM THE APPLICABLE STANDARD SHEETS OR SIGN FACE LAYOUTS.

3. THE PAYMENT FACTOR FOR POSTS IS THE NUMBER OF POSTS PROVIDED PER INSTALLATION.

AFFIX SEAL: BRIAN C. DANKERT, P.E.
ON: 22-JUN-2021 14:17

ALTERED BY:
ON:

STATE OF NEW YORK · BRIAN C. DANKERT · No. 092443 · LICENSED PROFESSIONAL ENGINEER

AS-BUILT REVISIONS
DESCRIPTION OF ALTERATIONS:

NY 78, TRANSIT ROAD, S.H. 1334A-1
FRENCH ROAD TO WEHRLE DRIVE
TOWNS OF CHEEKTOWAGA & LANCASTER
VILLAGE OF DEPEW
COUNTY: ERIE REGION: 05

PIN 5813.61
NY 78
UTILITY QUALITY LEVEL D

BRIDGES

CULVERTS

ALL DIMENSIONS IN ft UNLESS OTHERWISE NOTED

TRAFFIC SIGNAL #286 (ERIE) PLAN

CONTRACT NUMBER
D264571

DRAWING NO. TSP-41
SHEET NO. 203

IT IS A VIOLATION OF LAW FOR ANY PERSON, UNLESS THEY ARE ACTING UNDER THE DIRECTION OF A LICENSED PROFESSIONAL ENGINEER, ARCHITECT, LANDSCAPE ARCHITECT, OR LAND SURVEYOR, TO ALTER AN ITEM IN ANY WAY. IF AN ITEM BEARING THE STAMP OF A LICENSED PROFESSIONAL IS ALTERED, THE ALTERING ENGINEER, ARCHITECT, LANDSCAPE ARCHITECT, OR LAND SURVEYOR SHALL STAMP THE DOCUMENT AND INCLUDE THE NOTATION "ALTERED BY" FOLLOWED BY THEIR SIGNATURE, THE DATE OF SUCH ALTERATION, AND A SPECIFIC DESCRIPTION OF THE ALTERATION.

NEW YORK STATE OF OPPORTUNITY. Department of Transportation

DESIGN SUPERVISOR S. S. VAIDYA
JOB MANAGER R. F. SCHALLER
DESIGN KEITH A. GORECKI
CHECK BRIAN C. DANKERT
DRAFTING KEITH A. GORECKI
CHECK BRIAN C. DANKERT
PROJECT MANAGER S. S. VAIDYA

FILE NAME = 581361_CPH_TSP_LOC06_6.dgn
DATE/TIME = 22-JUN-2021 14:17
USER = kgorecki

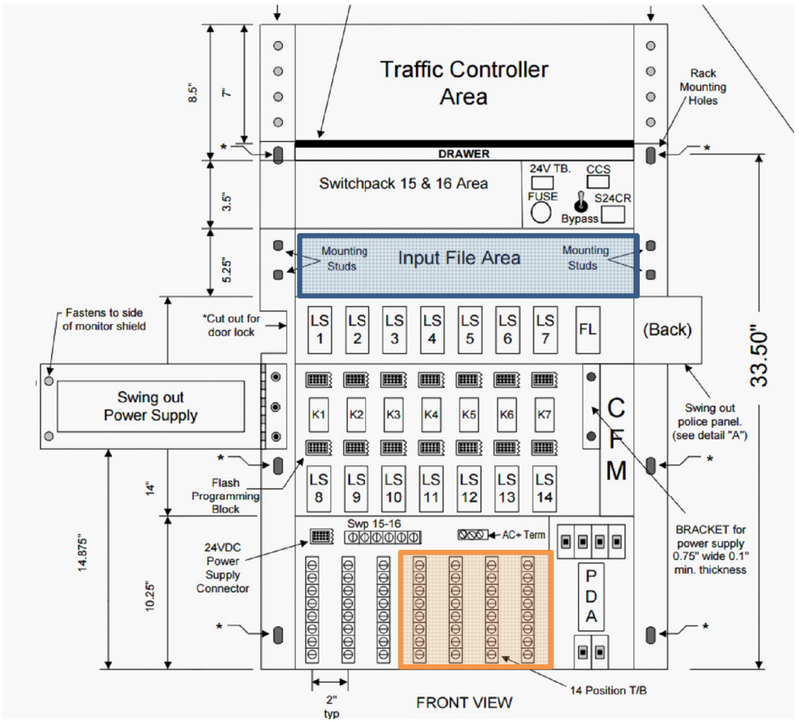

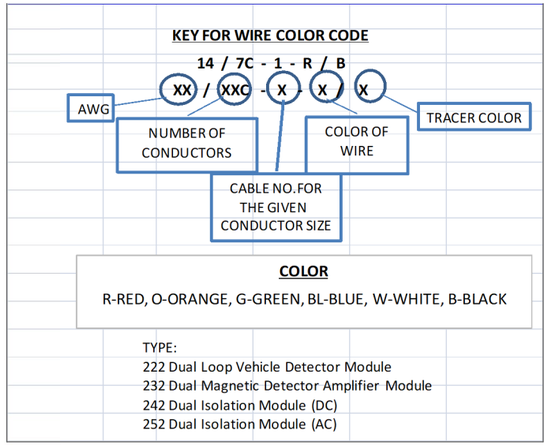

LOOP DETECTOR DATA TABLE

NO.	SIZE	NO. TURNS	WIRED	FUNCTION	206.03050005 (FT)	206.03060005 (FT)	680.53080305 (FT)	680.54 (FT)	680.72 (FT)	680.71 (FT)
10	6 x 6	4	PULSE	TRANSIT ROAD SB	6	5	15	102	124	542
11	6 x 6	4	PULSE	TRANSIT ROAD SB	6	5	4	80	102	542
12	6 x 6	4	PULSE	TRANSIT ROAD NB	4	1	16	104	114	312
13	6 x 6	4	PULSE	TRANSIT ROAD NB	4	1	4	80	90	312
TOTALS					20 FT	12 FT	39 FT	366 FT	430 FT	1708 FT

STOP BAR DETECTION ACCOMPLISHED BY 360 DEGREE CAMERA.

SIGNAL OPERATIONS SPECIFICATIONS — DATE: 6/4/2021

TABLE OF INPUT WIRING

SIGNAL NUMBER	05-53-286	COUNTY	Erie	INTERSECTION	Rt 78 @ Cloverleaf & Pleasant View Dr

INPUT FILE AREA		FUNCTION		DETECTOR LOCATION ID (PER PLAN)				TERMINAL WIRING BOARD				
SLOT	TYPE	(Φ#/PED #)	DESCRIPTION					TERMINAL	WIRE COLOR CODE			
1 - TOP	Video Card		360 DEGREE CAMERA	STOP BAR DETECTORS				1A	AS PER SUPPLIER			
								1B	AS PER SUPPLIER			
1 - BOTTOM								2A				
								2B				
2 - TOP	222	Φ6	SB T RT 78 SETBACK	10	11			3A	SLI - 10 - W	SLI - 11 - W		
								3B	SLI - 10 - B	SLI - 11 - B		
2 - BOTTOM		Φ2	NB T RT 78 SETBACK	12	13			4A	SLI - 12 - W	SLI - 13 - W		
								4B	SLI - 12 - B	SLI - 13 - B		
3 - TOP								5A				
								5B				
3 - BOTTOM								6A				
								6B				
4 - TOP								7A				
								7B				
4 - BOTTOM								8A				
								8B				
5 - TOP								9A				
								9B				
5 - BOTTOM								10A				
								10B				
6 - TOP								11A				
								11B				
6 - BOTTOM								12A				
								12B				
7 - TOP								13A				
								13B				
7 - BOTTOM								14A				
								14B				
8 - TOP								15A				
								15B				
8 - BOTTOM								16A				
								16B				
9 - TOP								17A				
								17B				
9 - BOTTOM								18A				
								18B				
10 - TOP								19A				
								19B				
10 - BOTTOM								20A				
								20B				
11 - TOP								21A				
								21B				
11 - BOTTOM								22A				
								22B				
12 - TOP								23A				
								23B				
12 - BOTTOM								24A				
								24B				
13 - TOP	242	Φ2 Ped	Crossing Pleasant View Dr	W2.1	W2.2			25A	14/5C-W2.1-O	14/5C-W2.2-O		
								25B	14/5C-W2.1-B	14/5C-W2.2-B		
13 - BOTTOM		Φ4 Ped	Crossing Rt 78	W4.1	W4.2			26A	14/5C-W4.1-O	14/5C-W4.2-O		
								26B	14/5C-W4.1-B	14/5C-W4.2-B		
14 - TOP	242	Φ6 Ped	Crossing Cloverleaf Dr	W6.1	W6.2			27A	14/5C-W6.1-O	14/5C-W6.2-O		
								27B	14/5C-W6.1-B	14/5C-W6.2-B		
14 - BOTTOM		Φ8 Ped	Crossing Rt 78	W8.1	W8.2			28A	14/5C-W8.1-O	14/5C-W8.2-O		
								28B	14/5C-W8.1-B	14/5C-W8.2-B		

AFFIX SEAL: BRIAN C. DANKERT, P.E.
ON: 22-JUN-2021 14:17

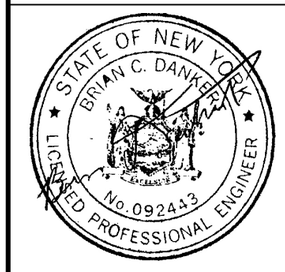

ALTERED BY:
ON:

AS-BUILT REVISIONS
DESCRIPTION OF ALTERATIONS:

NY 78, TRANSIT ROAD, S.H. 1334A-1
FRENCH ROAD TO WEHRLE DRIVE
TOWNS OF CHEEKTOWAGA & LANCASTER
VILLAGE OF DEPEW
COUNTY: ERIE REGION: 05

PIN 5813.61
NY 78
UTILITY QUALITY LEVEL D

BRIDGES

CULVERTS

ALL DIMENSIONS IN ft UNLESS OTHERWISE NOTED

TRAFFIC SIGNAL #286 (ERIE) PLAN

CONTRACT NUMBER D264571

DRAWING NO. TSP-42
SHEET NO. 204

IT IS A VIOLATION OF LAW FOR ANY PERSON, UNLESS THEY ARE ACTING UNDER THE DIRECTION OF A LICENSED PROFESSIONAL ENGINEER, ARCHITECT, LANDSCAPE ARCHITECT, OR LAND SURVEYOR, TO ALTER AN ITEM IN ANY WAY. IF AN ITEM BEARING THE STAMP OF A LICENSED PROFESSIONAL IS ALTERED, THE ALTERING ENGINEER, ARCHITECT, LANDSCAPE ARCHITECT, OR LAND SURVEYOR SHALL STAMP THE DOCUMENT AND INCLUDE THE NOTATION "ALTERED BY" FOLLOWED BY THEIR SIGNATURE, THE DATE OF SUCH ALTERATION, AND A SPECIFIC DESCRIPTION OF THE ALTERATION.

NEW YORK STATE OF OPPORTUNITY. Department of Transportation

DESIGN SUPERVISOR S. S. VAIDYA
JOB MANAGER R. F. SCHALLER
DESIGN KEITH A. GORECKI
CHECK BRIAN C. DANKERT
DRAFTING KEITH A. GORECKI
CHECK BRIAN C. DANKERT
PROJECT MANAGER S. S. VAIDYA
FILE NAME = 581361_CPH_TSP_LOC06_7.dgn
DATE/TIME = 22-JUN-2021 14:17
USER = kgorecki

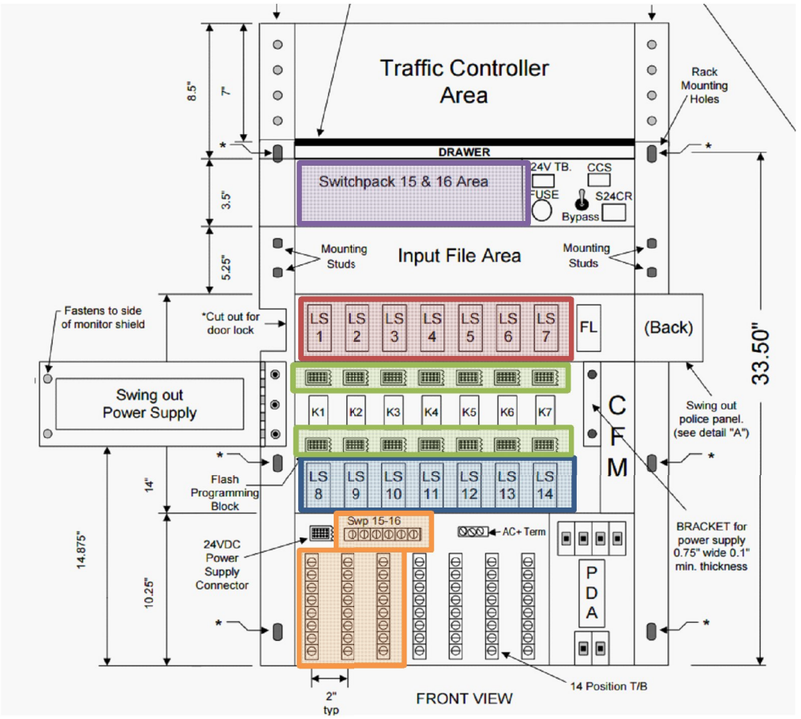

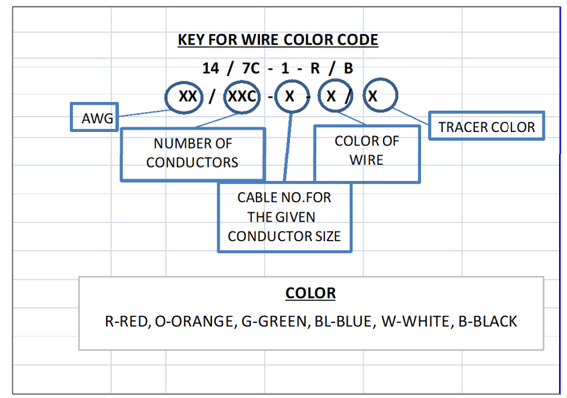

LEGEND

INDICATIONS					
G	= CIRCULAR GREEN	Y	= CIRCULAR YELLOW	R	= CIRCULAR RED
← G	= LEFT GREEN ARROW	← Y	= LEFT YELLOW ARROW	← R	= LEFT RED ARROW
→ G	= RIGHT GREEN ARROW	→ Y	= RIGHT YELLOW ARROW	→ R	= RIGHT RED ARROW
↑ G	= VERT. GREEN ARROW	← FY	= FLASHING YELLOW ARROW	WALK	=HAND/MAN
				DON'T WALK	=FLASHING HAD/COUNT DOWN TIMER
FLASH PLUG					
W	=DARK				
R	=FLASH RED				

SIGNAL OPERATIONS SPECIFICATIONS — DATE: 3/4/2021

TABLE OF SWITCH PACKS

SIGNAL NUMBER		05-53-286				COUNTY	Erie	INTERSECTION	Rt 78 @ Cloverleaf & Pleasant View Dr			
SWITCH PACK	FUNCTION (Φ#/OVLP)	FACE NUMBERS				FLASH PLUG	INDICATIONS	TERMINAL WIRING BOARD				
								TERMINAL	WIRE COLOR CODE PER FACE			
TOP ROW (LS1-LS7)												
SP 1	OvLap 1 FYA	1				Y	← R	SP 1R	14/7C-1-R			
							← Y	SP 1Y	14/7C-1-Y			
							← G	SP 1G	14/7C-1-G			
							GND. BAR	GND. BUS	14/7C-1-W			
SP 2	Φ2	5	6			Y	R	SP 2R	14/5C-5-R	14/5C-6-R		
							Y	SP 2Y	14/5C-5-Y	14/5C-6-Y		
							G	SP 2G	14/5C-5-G	14/5C-6-G		
							GND. WIRE	GND. BUS	14/5C-5-W	14/5C-6-W		
SP 3								SP 3R				
								SP 3Y				
								SP 3G				
							GND. WIRE	GND. BUS				
SP 4	Φ4	9	10			R	R	SP 4R	14/5C-9-R	14/5C-10-R		
							Y	SP 4Y	14/5C-9-Y	14/5C-10-Y		
							G	SP 4G	14/5C-9-G	14/5C-10-G		
							GND. WIRE	GND. BUS	14/5C-9-W	14/5C-10-W		
SP 5	OvLap 5 FYA	4				R	← R	SP 5R	14/7C-4-R			
							← Y	SP 5Y	14/7C-4-Y			
								SP 5G	1 kOhm, 20 Watt Resistor			
							GND. WIRE	GND. BUS	14/7C-4-W			
SP 6	Φ6	2	3			Y	R	SP 6R	14/5C-2-R	14/5C-3-R		
							Y	SP 6Y	14/5C-2-Y	14/5C-3-Y		
							G	SP 6G	14/5C-2-G	14/5C-3-G		
							GND. WIRE	GND. BUS	14/5C-2-W	14/5C-3-W		
SP 7								SP 7R				
								SP 7Y				
								SP 7G				
							GND. WIRE	GND. BUS				
BOTTOM ROW (LS8-LS14)												
SP 8	Φ8	7	8			R	R	SP 8R	14/5C-7-R	14/5C-8-R		
							Y	SP 8Y	14/5C-7-Y	14/5C-8-Y		
							G	SP 8G	14/5C-7-G	14/5C-8-G		
							GND. WIRE	GND. BUS	14/5C-7-W	14/5C-8-W		
SP 9								SP 9R				
								SP 9Y				
								SP 9G				
							GND. WIRE	GND. BUS				
SP 10								SP 10R				
								SP 10Y				
								SP 10G				
							GND. WIRE	GND. BUS				
SP 11								SP 11R				
								SP 11Y				
								SP 11G				
							GND. WIRE	GND. BUS				
SP 12								SP 12R				
								SP 12Y				
								SP 12G				
							GND. WIRE	GND. BUS				
SPECIAL												
SP 13	Φ2 Ped w/FYA Output	W2.1	W2.2			W	DON'T WALK	SP 13R	14/7C-W2.1-R	14/7C-W2.2-R		
							← FY	SP 13Y	14/7C-1-BL			
							WALK	SP 13G	14/7C-W2.1-G	14/7C-W2.2-G		
							GND. WIRE	GND. BUS	14/7C-W2.1-W	14/7C-W2.2-W		
SP 14	Φ4 Ped w/FYA Output	W4.1	W4.2			W	DON'T WALK	SP 14R	14/7C-W4.1-R	14/7C-W4.2-R		
								SP 14Y				
							WALK	SP 14G	14/7C-W4.1-G	14/7C-W4.2-G		
							GND. WIRE	GND. BUS	14/7C-W4.1-W	14/7C-W4.2-W		
SP 15	Φ6 Ped w/FYA Output	W6.1	W6.2			W	DON'T WALK	SP 15R	14/7C-W6.1-R	14/7C-W6.2-R		
							← FY	SP 15Y	14/7C-4-BL			
							WALK	SP 15G	14/7C-W6.1-G	14/7C-W6.2-G		
							GND. WIRE	GND. BUS	14/7C-W6.1-W	14/7C-W6.2-W		
SP 16	Φ8 Ped w/FYA Output	W8.1	W8.2			W	DON'T WALK	SP 16R	14/7C-W8.1-R	14/7C-W8.2-R		
								SP 16Y				
							WALK	SP 16G	14/7C-W8.1-G	14/7C-W8.2-G		
							GND. WIRE	GND. BUS	14/7C-W8.1-W	14/7C-W8.2-W		

AFFIX SEAL: BRIAN C. DANKERT, P.E.
ON: 22-JUN-2021 14:17

ALTERED BY:
ON:

STATE OF NEW YORK — BRIAN C. DANKERT — No. 092443 — LICENSED PROFESSIONAL ENGINEER

AS-BUILT REVISIONS
DESCRIPTION OF ALTERATIONS:

NY 78, TRANSIT ROAD, S.H. 1334A-1
FRENCH ROAD TO WEHRLE DRIVE
TOWNS OF CHEEKTOWAGA & LANCASTER
VILLAGE OF DEPEW
COUNTY: ERIE — REGION: 05

PIN 5813.61
NY 78
UTILITY QUALITY LEVEL D

BRIDGES

CULVERTS

ALL DIMENSIONS IN ft UNLESS OTHERWISE NOTED

TRAFFIC SIGNAL #286 (ERIE) PLAN

CONTRACT NUMBER D264571

DRAWING NO. TSP-43
SHEET NO. 205

IT IS A VIOLATION OF LAW FOR ANY PERSON, UNLESS THEY ARE ACTING UNDER THE DIRECTION OF A LICENSED PROFESSIONAL ENGINEER, ARCHITECT, LANDSCAPE ARCHITECT, OR LAND SURVEYOR, TO ALTER AN ITEM IN ANY WAY. IF AN ITEM BEARING THE STAMP OF A LICENSED PROFESSIONAL IS ALTERED, THE ALTERING ENGINEER, ARCHITECT, LANDSCAPE ARCHITECT, OR LAND SURVEYOR SHALL STAMP THE DOCUMENT AND INCLUDE THE NOTATION "ALTERED BY" FOLLOWED BY THEIR SIGNATURE, THE DATE OF SUCH ALTERATION, AND A SPECIFIC DESCRIPTION OF THE ALTERATION.

NEW YORK STATE OF OPPORTUNITY. Department of Transportation

DESIGN SUPERVISOR S. S. VAIDYA — JOB MANAGER R. F. SCHALLER — DESIGN KEITH A. GORECKI — CHECK BRIAN C. DANKERT — DRAFTING KEITH A. GORECKI — CHECK BRIAN C. DANKERT — PROJECT MANAGER S. S. VAIDYA

FILE NAME = 581361_CPH_TSP_LOC06_8.dgn
DATE/TIME = 22-JUN-2021 14:17
USER = kgorecki

NYSDOT TRAFFIC SIGNAL #541P (ERIE)
NY ROUTE 78 (TRANSIT ROAD) AT TOPS MARKET DRIVEWAY AND MCDONALDS DRIVEWAY

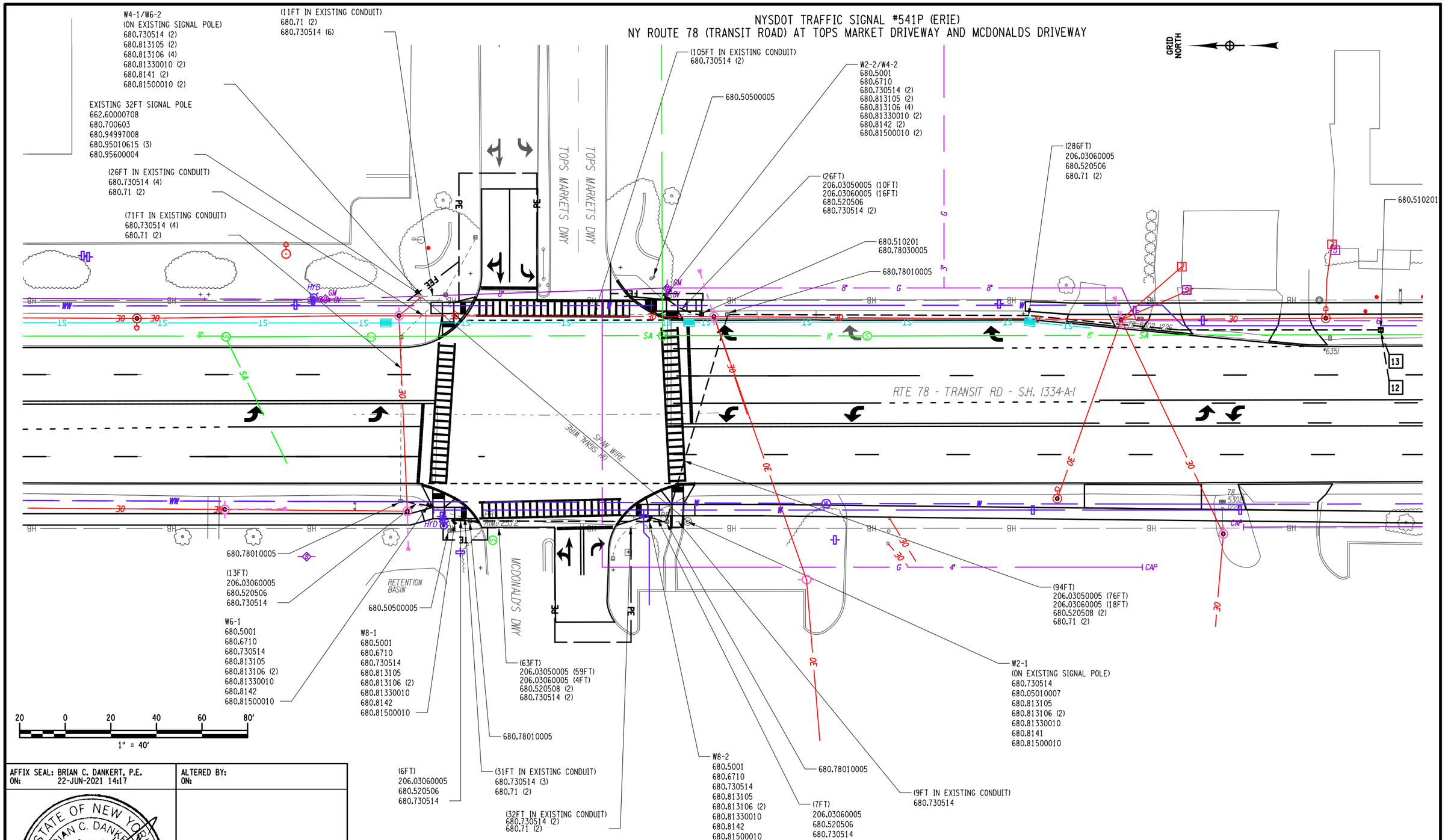

AFFIX SEAL: BRIAN C. DANKERT, P.E. ON: 22-JUN-2021 14:17	ALTERED BY: ON:

STATE OF NEW YORK · BRIAN C. DANKERT · No. 092443 · LICENSED PROFESSIONAL ENGINEER

AS-BUILT REVISIONS
DESCRIPTION OF ALTERATIONS:

NY 78, TRANSIT ROAD, S.H. 1334A-1
FRENCH ROAD TO WEHRLE DRIVE
TOWNS OF CHEEKTOWAGA & LANCASTER
VILLAGE OF DEPEW
COUNTY: ERIE REGION: 05

PIN 5813.61
NY 78
UTILITY QUALITY LEVEL D

BRIDGES

CULVERTS

ALL DIMENSIONS IN ft UNLESS OTHERWISE NOTED

TRAFFIC SIGNAL #541P (ERIE) PLAN

CONTRACT NUMBER
D264571

DRAWING NO. TSP-44
SHEET NO. 206

IT IS A VIOLATION OF LAW FOR ANY PERSON, UNLESS THEY ARE ACTING UNDER THE DIRECTION OF A LICENSED PROFESSIONAL ENGINEER, ARCHITECT, LANDSCAPE ARCHITECT, OR LAND SURVEYOR, TO ALTER AN ITEM IN ANY WAY. IF AN ITEM BEARING THE STAMP OF A LICENSED PROFESSIONAL IS ALTERED, THE ALTERING ENGINEER, ARCHITECT, LANDSCAPE ARCHITECT, OR LAND SURVEYOR SHALL STAMP THE DOCUMENT AND INCLUDE THE NOTATION "ALTERED BY" FOLLOWED BY THEIR SIGNATURE, THE DATE OF SUCH ALTERATION, AND A SPECIFIC DESCRIPTION OF THE ALTERATION.

NEW YORK STATE OF OPPORTUNITY. Department of Transportation

PROJECT MANAGER S. S. VAIDYA
CHECK BRIAN C. DANKERT
DRAFTING KEITH A. GORECKI
DESIGN KEITH A. GORECKI
JOB MANAGER R. F. SCHALLER
DESIGN SUPERVISOR S. S. VAIDYA

FILE NAME = 581361_CPH_TSP_LOC07_1.dgn
DATE/TIME = 22-JUN-2021 14:17
USER = kgorecki

NYSDOT TRAFFIC SIGNAL #541P (ERIE)
NY ROUTE 78 (TRANSIT ROAD) AT TOPS MARKET DRIVEWAY AND MCDONALDS DRIVEWAY

QUANTITY AND ITEM LIST			
SIGNAL #541P (ERIE) - NY ROUTE 78 (TRANSIT ROAD) AT TOPS MARKET DRIVEWAY AND MCDONALDS DRIVEWAY			
ITEM NO.	DESCRIPTION	UNIT	QTY
206.03050005	CONDUIT EXCAV & BACKFILL (IN ROADWAY)	FT	135
206.03060005	CONDUIT EXCAV & BACKFILL (NOT IN ROADWAY)	FT	372
619.1611	MAINTAIN TRAFFIC SIGNAL EQUIPMENT (REQ A)	MO	8
662.60000708	FURNISHING ELECTRICAL SERVICE	DC	1
680.05010007	360 DEGREE CAMERA VIDEO DETECTION SYSTEM	EA	1
680.50500005	REMOVE EXISTING FOUNDATION	FT	2
680.5001	POLE EXCAVATION AND CONCRETE FOUNDATION	CY	2
680.510201	PULLBOX-CIRCULAR, 18" IN DIA., REINFORCED CONCRETE	EA	1
680.510301	PULLBOX-CIRCULAR, 24" IN DIA., REINFORCED CONCRETE	EA	1
680.520506	CONDUIT, RIGID PLASTIC, CLASS 1 , 2 NPS	FT	338
680.520508	CONDUIT, RIGID PLASTIC, CLASS 1 , 3 NPS	FT	314
680.53080305	CONDUIT, FLEX-TIGHT NON-METAL, 1NPS	FT	12
680.54	INDUCTANCE LOOP INSTALLATION	FT	105
680.6710	SIGNAL POLE-POST TOP MOUNT 10' MTD HEIGHT	EA	4
680.700603	RISER ASSEMBLY, 1" DIA.	EA	1
680.71	SHIELDED LEAD-IN CABLE	FT	1144
680.72	INDUCTANCE LOOP WIRE	FT	255
680.730514	SIGNAL CABLE, 5 CONDUCTOR, 14 AWG	FT	1275
680.77000705	MODIFY TRAFFIC SIGNAL INSTALLATION, LOCATION 5	ELOC	1
680.78010005	ALTER EXISTING PULLBOX FOR CONDUIT	EA	4
680.78030005	CUT AND PREPAIR EXISTING CONDUIT GROUP	EA	1
680.79000705	REMOVE TRAFFIC SIGNAL INSTALLATION, LOCATION 7	ELOC	1
680.813105	PEDESTRIAN SIGNAL MODULE 12IN, BI-MODAL HAND/MAN	EA	8
680.813106	PEDESTRIAN SIGNAL SECTION - POLYCARBONITE, TYPE 1, 12IN.	EA	16
680.81330010	AUDIBLE PEDESTRIAN SIGNAL	EA	8
680.8141	PEDESTRIAN SIGNAL BRACKET MOUNT ASSEMBLY	EA	3
680.8142	PEDESTRIAN SIGNAL TOP MOUNT ASSEMBLY	EA	5
680.81500010	PEDESTRIAN COUNT DOWN TIMER	EA	8
680.94997008	F AND I ELECTRICAL DISCONNECT GEN. TRAN SWITCH	EA	1
680.95010615	SERVICE CABLE, 1 CONDUCTOR, 6 AWG	FT	96
680.95600004	ELECTRICAL METER PAN	EA	1

1.) EXISTING PULLBOX LOCATIONS ON PLANS ARE SHOWN BASED ON RECORD PLANS. ACTUAL FIELD LOCATIONS MAY VARY.

2.) ITEM 680.77000705, "MODIFY TRAFFIC SIGNAL INSTALLATION, LOCATION 7" SHALL INCLUDE THE REQUIRED MODIFICATIONS TO THE EXISTING WIRING WITHIN THE SIGNAL CABINETS TO MATCH THE PROPOSED INPUT WIRING AND SWITCHPACKS FOUND IN THE PLANS.

3.) ITEM 680.79000705, "REMOVE TRAFFIC SIGNAL INSTALLATION, LOCATION 7" SHALL INCLUDE THE REMOVAL OF THE EXISTING TRAFFIC SIGNAL EQUIPMENT LISTED BELOW. ALL EQUIPMENT LISTED SHALL BE DISPOSED OF AND ONLY LED SERIAL NUMBERS SHALL BE RECORDED AND GIVEN TO NYSDOT TRAFFIC SIGNAL MAINTENANCE CREW.

- EXISTING RISER ASSEMBLY
- EXISTING DISCONNECT
- EXISTING ELECTRICAL SERVICE
- EXISITNG METER PAN
- ALL EXISTING PEDESTRIAN FEATURES

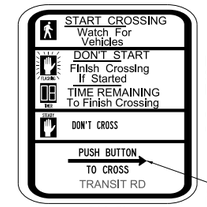

R10-3i

NEW PEDESTRIAN SIGNS SHALL BE SIGN NUMBER R10-3i FROM THE MUTCD.

"TRANSIT RD" FOR W2-1, W2-2, W6-1 & W6-2
"DRIVEWAY" FOR W4-1, W4-2, W8-1, & W8-2

ARROW MAY FACE LEFT OR RIGHT, IT IS CONTRACTORS RESPONSIBILITY FOR PROPER ARROW ORIENTATION.

AUDIBLE WIRING NOTE:

THE COST TO FURNISH AND INSTALL WIRING BETWEEN THE AUDIBLE PEDESTRIAN SIGNAL (APS) UNITS AND THEIR RESPECTIVE CONTROL UNITS MOUNTED IN THE PED. HEADS SHALL BE INCLUDED UNDER PROVISIONS OF ITEM 680.81330010.

THE MANUFACTURER'S SUGGESTED CABLES FOR USE WITH AUDIBLE PEDESTRIAN SIGNAL UNITS ARE BELDEN 8489 FOR ABOVE GROUND.

BELDEN 8489, OR EQUIVALENT, SHALL BE USED WITH 680.81330010.

REFER TO "EZCOMMUNICATOR 4 WIRE NAVIGATOR APS SYSTEM INSTALLATION MANUAL" FOR MANUFACTURER'S INSTALLATION DETAILS AND PROCEDURES.

TRAFFIC SIGNAL #541P (ERIE)			
POWER SUPPLIER:			
EXISTING METER #:		NEW METER #:	
EXISTING ACCOUNT #:		NEW ACCOUNT #	
BILLING TO:			

DESIGN SUPERVISOR S. S. VAIDYA | JOB MANAGER R. F. SCHALLER | DESIGN KEITH A. GORECKI | CHECK BRIAN C. DANKERT | DRAFTING KEITH A. GORECKI | CHECK BRIAN C. DANKERT | PROJECT MANAGER S. S. VAIDYA

FILE NAME = 581361_CPH_TSP_L0C07_2.dgn
DATE/TIME = 22-JUN-2021 14:17
USER = kgorecki

AFFIX SEAL: BRIAN C. DANKERT, P.E.
ON: 22-JUN-2021 14:17

STATE OF NEW YORK · BRIAN C. DANKERT · No. 092443 · LICENSED PROFESSIONAL ENGINEER

ALTERED BY:
ON:

AS-BUILT REVISIONS
DESCRIPTION OF ALTERATIONS:

NY 78, TRANSIT ROAD, S.H. 1334A-1
FRENCH ROAD TO WEHRLE DRIVE
TOWNS OF CHEEKTOWAGA & LANCASTER
VILLAGE OF DEPEW
COUNTY: ERIE REGION: 05

PIN 5813.61
NY 78
UTILITY QUALITY LEVEL D

BRIDGES

CULVERTS

ALL DIMENSIONS IN ft UNLESS OTHERWISE NOTED

TRAFFIC SIGNAL #541P (ERIE) PLAN

CONTRACT NUMBER D264571

DRAWING NO. TSP-45
SHEET NO. 207

IT IS A VIOLATION OF LAW FOR ANY PERSON, UNLESS THEY ARE ACTING UNDER THE DIRECTION OF A LICENSED PROFESSIONAL ENGINEER, ARCHITECT, LANDSCAPE ARCHITECT, OR LAND SURVEYOR, TO ALTER AN ITEM IN ANY WAY. IF AN ITEM BEARING THE STAMP OF A LICENSED PROFESSIONAL IS ALTERED, THE ALTERING ENGINEER, ARCHITECT, LANDSCAPE ARCHITECT, OR LAND SURVEYOR SHALL STAMP THE DOCUMENT AND INCLUDE THE NOTATION "ALTERED BY" FOLLOWED BY THEIR SIGNATURE, THE DATE OF SUCH ALTERATION, AND A SPECIFIC DESCRIPTION OF THE ALTERATION.

NEW YORK STATE OF OPPORTUNITY. Department of Transportation

NYSDOT TRAFFIC SIGNAL #541P (ERIE)
NY ROUTE 78 (TRANSIT ROAD) AT TOPS MARKET DRIVEWAY AND MCDONALDS DRIVEWAY

581361 - NY 78 (TRANSIT RD); FRENCH RD to ELLICOTT CREEK

05-53-541P

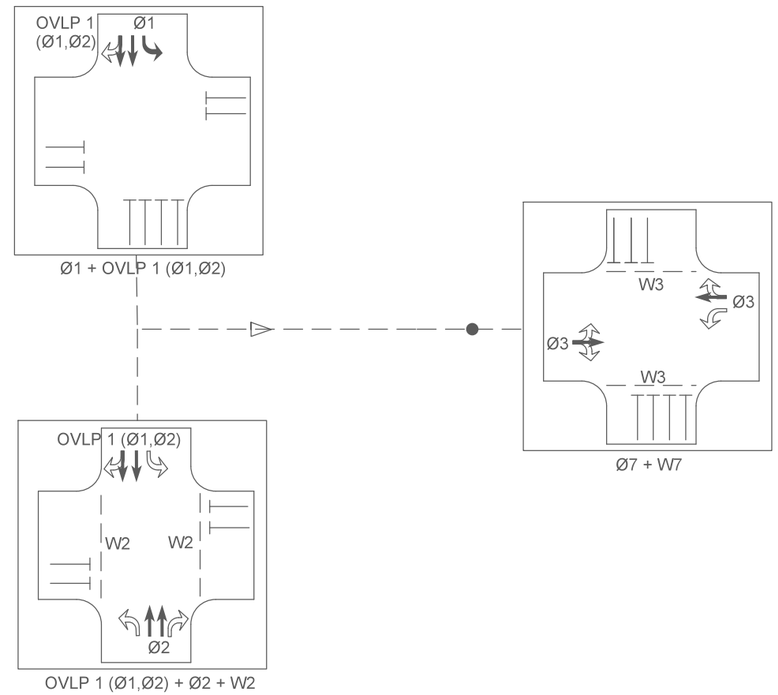

N

Ø1 - SB LEFT (TRANSIT RD, RTE. 78)
Ø2 - NB THROUGH/RIGHT/LEFT (TRANSIT RD, RTE. 78)
Ø3 - EB/WB THROUGH/RIGHT/LEFT (TOPS PLAZA & MCDONALDS DRIVEWAY)

OVLP 1 (Ø1,Ø2) - SB THROUGH/RIGHT (TRANSIT RD, RTE. 78)

W2 - EB/WB APPROACH PEDESTRIAN CROSSING
W3 - NB/SB APPROACH PEDESTRIAN CROSSING

2/3/2020

PROJECT MANAGER S. S. VAIDYA
CHECK BRIAN C. DANKERT
DRAFTING KEITH A. GORECKI
CHECK BRIAN C. DANKERT
DESIGN KEITH A. GORECKI
JOB MANAGER R. F. SCHALLER
DESIGN SUPERVISOR S. S. VAIDYA

FILE NAME = 581361_CPH_TSP_L0C07_3.dgn
DATE/TIME = 22-JUN-2021 14:17
USER = kgorecki

AFFIX SEAL: BRIAN C. DANKERT, P.E.
ON: 22-JUN-2021 14:17

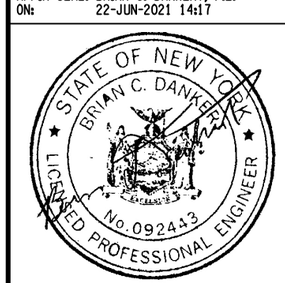

ALTERED BY:
ON:

AS-BUILT REVISIONS
DESCRIPTION OF ALTERATIONS:

NY 78, TRANSIT ROAD, S.H. 1334A-1
FRENCH ROAD TO WEHRLE DRIVE
TOWNS OF CHEEKTOWAGA & LANCASTER
VILLAGE OF DEPEW
COUNTY: ERIE REGION: 05

PIN 5813.61
NY 78
UTILITY QUALITY LEVEL D

BRIDGES

CULVERTS

ALL DIMENSIONS IN ft UNLESS OTHERWISE NOTED

TRAFFIC SIGNAL #541P (ERIE) PLAN

CONTRACT NUMBER
D264571

DRAWING NO. TSP-46
SHEET NO. 208

IT IS A VIOLATION OF LAW FOR ANY PERSON, UNLESS THEY ARE ACTING UNDER THE DIRECTION OF A LICENSED PROFESSIONAL ENGINEER, ARCHITECT, LANDSCAPE ARCHITECT, OR LAND SURVEYOR, TO ALTER AN ITEM IN ANY WAY. IF AN ITEM BEARING THE STAMP OF A LICENSED PROFESSIONAL IS ALTERED, THE ALTERING ENGINEER, ARCHITECT, LANDSCAPE ARCHITECT, OR LAND SURVEYOR SHALL STAMP THE DOCUMENT AND INCLUDE THE NOTATION "ALTERED BY" FOLLOWED BY THEIR SIGNATURE, THE DATE OF SUCH ALTERATION, AND A SPECIFIC DESCRIPTION OF THE ALTERATION.

NEW YORK STATE OF OPPORTUNITY. Department of Transportation

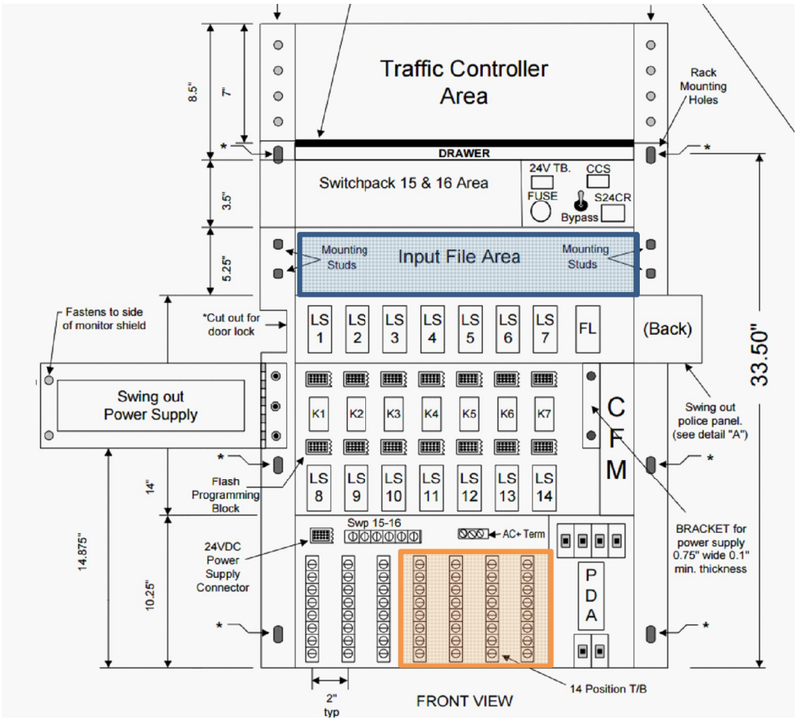

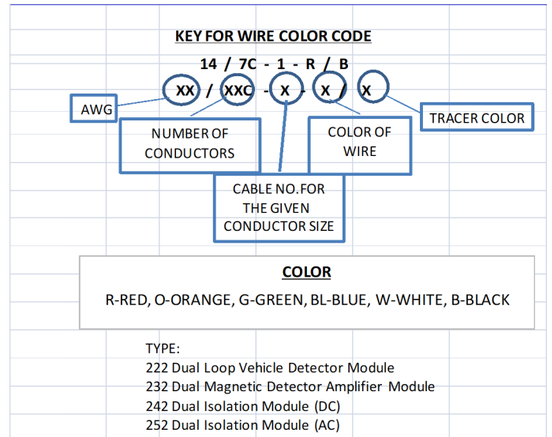

LOOP DETECTOR DATA TABLE									
NO.	SIZE	NO. TURNS	WIRED	FUNCTION	206.03060005 (FT)	680.53080305 (FT)	680.54 (FT)	680.72 (FT)	680.71 (FT)
12	6 x 6	4	PULSE	TRANSIT ROAD NB	6	6	65	140	572
13	6 x 6	4	PULSE	TRANSIT ROAD NB	6	6	40	115	572
				TOTALS	12 FT	12 FT	105 FT	255 FT	1144 FT

STOP BAR DETECTION ACCOMPLISHED BY 360 DEGREE CAMERA.

SIGNAL OPERATIONS SPECIFICATIONS — DATE: 6/4/2021

TABLE OF INPUT WIRING

SIGNAL NUMBER	05-53-541P	COUNTY	Erie	INTERSECTION	Rt 78 @ Tops Plaza

INPUT FILE AREA		FUNCTION		DETECTOR LOCATION ID (PER PLAN)				TERMINAL WIRING BOARD				
SLOT	TYPE	(Φ#/PED #)	DESCRIPTION					TERMINAL	WIRE COLOR CODE			
1 - TOP	Video Card	Video Card	360 Degree Camera	Stop Bar Detector				1A	AS PER SUPPLIER			
								1B	AS PER SUPPLIER			
1 - BOTTOM		Video Card						2A				
								2B				
2 - TOP	222	Φ2	NB T Rt 78 Setback	12	13			3A	SLI - 12 - W	SLI - 13 - W		
								3B	SLI - 12 - B	SLI - 13 - B		
2 - BOTTOM								4A				
								4B				
3 - TOP								5A				
								5B				
3 - BOTTOM								6A				
								6B				
4 - TOP								7A				
								7B				
4 - BOTTOM								8A				
								8B				
5 - TOP								9A				
								9B				
5 - BOTTOM								10A				
								10B				
6 - TOP								11A				
								11B				
6 - BOTTOM								12A				
								12B				
7 - TOP								13A				
								13B				
7 - BOTTOM								14A				
								14B				
8 - TOP								15A				
								15B				
8 - BOTTOM								16A				
								16B				
9 - TOP								17A				
								17B				
9 - BOTTOM								18A				
								18B				
10 - TOP								19A				
								19B				
10 - BOTTOM								20A				
								20B				
11 - TOP								21A				
								21B				
11 - BOTTOM								22A				
								22B				
12 - TOP								23A				
								23B				
12 - BOTTOM								24A				
								24B				
13 - TOP	242	Φ2 Ped	Crossing Tops Driveway	W2.1	W2.2			25A	14/5C-W2.1-O	14/5C-W2.2-O		
								25B	14/5C-W2.1-B	14/5C-W2.2-B		
13 - BOTTOM		Φ3 Ped	Crossing North Leg	W3.1	W3.2			26A	14/5C-W3.1-O	14/5C-W3.2-O		
								26B	14/5C-W3.1-B	14/5C-W3.2-B		
14 - TOP	242	Φ2 Ped	Crossing Mcdonalds Driveway	W2.1	W2.2			27A	14/5C-W2.1-O	14/5C-W2.2-O		
								27B	14/5C-W2.1-B	14/5C-W2.2-B		
14 - BOTTOM		Φ3 Ped	Crossing South Leg	W3.1	W3.2			28A	14/5C-W3.1-O	14/5C-W3.2-O		
								28B	14/5C-W3.1-B	14/5C-W3.2-B		

AFFIX SEAL: BRIAN C. DANKERT, P.E.
ON: 22-JUN-2021 14:17

ALTERED BY:
ON:

AS-BUILT REVISIONS
DESCRIPTION OF ALTERATIONS:

NY 78, TRANSIT ROAD, S.H. 1334A-1
FRENCH ROAD TO WEHRLE DRIVE
TOWNS OF CHEEKTOWAGA & LANCASTER
VILLAGE OF DEPEW
COUNTY: ERIE REGION: 05

PIN 5813.61
NY 78
UTILITY QUALITY LEVEL D

BRIDGES

CULVERTS

ALL DIMENSIONS IN ft UNLESS OTHERWISE NOTED

TRAFFIC SIGNAL #541P (ERIE) PLAN

CONTRACT NUMBER D264571

DRAWING NO. TSP-47
SHEET NO. 209

IT IS A VIOLATION OF LAW FOR ANY PERSON, UNLESS THEY ARE ACTING UNDER THE DIRECTION OF A LICENSED PROFESSIONAL ENGINEER, ARCHITECT, LANDSCAPE ARCHITECT, OR LAND SURVEYOR, TO ALTER AN ITEM IN ANY WAY. IF AN ITEM BEARING THE STAMP OF A LICENSED PROFESSIONAL IS ALTERED, THE ALTERING ENGINEER, ARCHITECT, LANDSCAPE ARCHITECT, OR LAND SURVEYOR SHALL STAMP THE DOCUMENT AND INCLUDE THE NOTATION "ALTERED BY" FOLLOWED BY THEIR SIGNATURE, THE DATE OF SUCH ALTERATION, AND A SPECIFIC DESCRIPTION OF THE ALTERATION.

NEW YORK STATE OF OPPORTUNITY. Department of Transportation

PROJECT MANAGER S. S. VAIDYA
CHECK BRIAN C. DANKERT
DRAFTING KEITH A. GORECKI
CHECK BRIAN C. DANKERT
DESIGN KEITH A. GORECKI
JOB MANAGER R. F. SCHALLER
DESIGN SUPERVISOR S. S. VAIDYA
FILE NAME = 581361_CPH_TSP_LOC07_4.dgn
DATE/TIME = 22-JUN-2021 14:17
USER = kgorecki

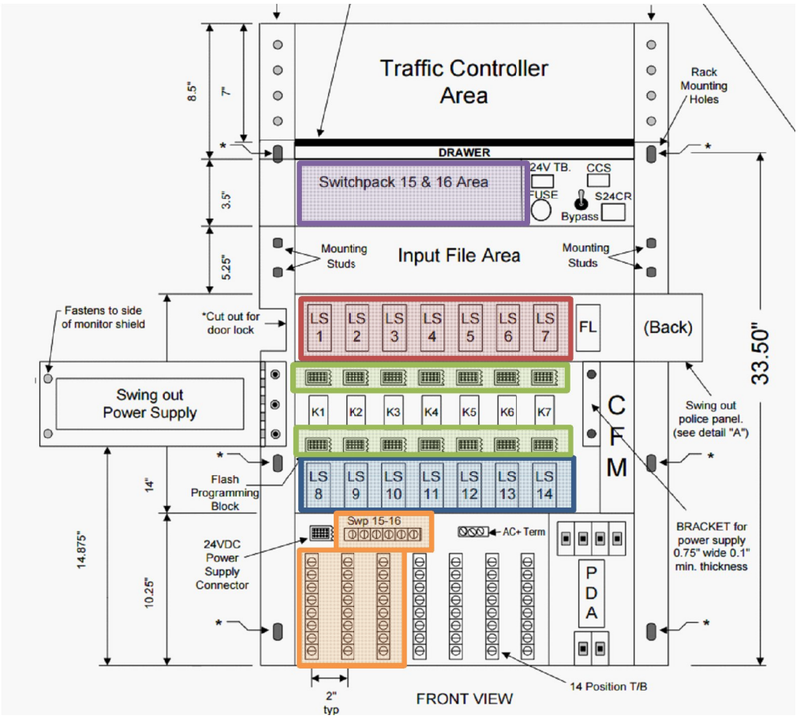

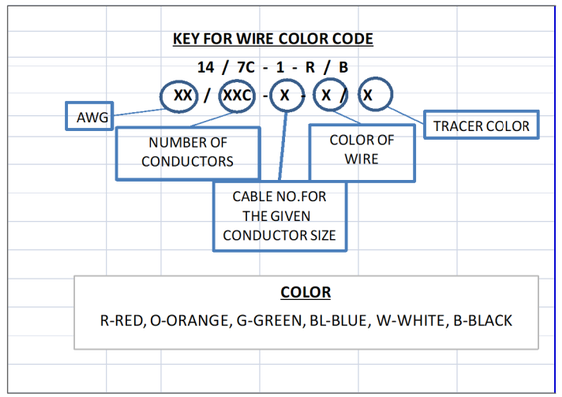

LEGEND

INDICATIONS					
G	= CIRCULAR GREEN	Y	= CIRCULAR YELLOW	R	= CIRCULAR RED
← G	= LEFT GREEN ARROW	← Y	= LEFT YELLOW ARROW	← R	= LEFT RED ARROW
G →	= RIGHT GREEN ARROW	Y →	= RIGHT YELLOW ARROW	R →	= RIGHT RED ARROW
↑ G	= VERT. GREEN ARROW	← FY	= FLASHING YELLOW ARROW	WALK	=HAND/MAN
				DON'T WALK	=FLASHING HAD/COUNT DOWN TIMER
FLASH PLUG					
W	=DARK				
R	=FLASH RED				

SIGNAL OPERATIONS SPECIFICATIONS — DATE: 3/4/2021

TABLE OF SWITCH PACKS

	SIGNAL NUMBER		05-53-541P				COUNTY	Erie	INTERSECTION	Rt 78 @ Tops Plaza			
	SWITCH PACK	FUNCTION (Φ#/OVLP)	FACE NUMBERS				FLASH PLUG	INDICATIONS	TERMINAL WIRING BOARD				
									TERMINAL	WIRE COLOR CODE PER FACE			
TOP ROW (LS1-LS7)	SP 1	Φ1	1				W		SP 1R				
								← Y	SP 1Y	14/7C-1-BL			
								← G	SP 1G	14/7C-1-B			
								GND. BAR	GND. BUS	14/7C-1-W			
	SP 2								SP 2R				
									SP 2Y				
									SP 2G				
								GND. WIRE	GND. BUS				
	SP 3	Φ2	1	2	3	4	Y	R	SP 3R	14/7C-1-R	14/5C-2-R	14/5C-3-R	14/5C-4-R
								Y	SP 3Y	14/7C-1-Y	14/5C-2-Y	14/5C-3-Y	14/5C-4-Y
								G	SP 3G	14/7C-1-G	14/5C-2-G	14/5C-3-G	14/5C-4-G
								GND. WIRE	GND. BUS	14/7C-1-W	14/5C-2-W	14/5C-3-W	14/5C-4-W
	SP 4								SP 4R				
									SP 4Y				
									SP 4G				
								GND. WIRE	GND. BUS				
	SP 5								SP 5R				
									SP 5Y				
									SP 5G				
								GND. WIRE	GND. BUS				
	SP 6								SP 6R				
									SP 6Y				
									SP 6G				
								GND. WIRE	GND. BUS				
	SP 7	Φ3	5	6	7	8	R	R	SP 7R	14/5C-5-R	14/5C-6-R	14/5C-7-R	14/5C-8-R
								Y	SP 7Y	14/5C-5-Y	14/5C-6-Y	14/5C-7-Y	14/5C-8-Y
								G	SP 7G	14/5C-5-G	14/5C-6-G	14/5C-7-G	14/5C-8-G
								GND. WIRE	GND. BUS	14/5C-5-W	14/5C-6-W	14/5C-7-W	14/5C-8-W
BOTTOM ROW (LS8-LS14)	SP 8								SP 8R				
									SP 8Y				
									SP 8G				
								GND. WIRE	GND. BUS				
	SP 9	OvLap 1	1	2			Y	R	SP 9R				
								Y	SP 9Y				
								G	SP 9G				
								GND. WIRE	GND. BUS				
	SP 10								SP 10R				
									SP 10Y				
									SP 10G				
								GND. WIRE	GND. BUS				
	SP 11	Φ2 Ped	W2.1	W2.2	W2.3	W2.4	W	DON'T WALK	SP 11R	14/5C-W2.1-R	14/5C-W2.2-R	14/5C-W2.3-R	14/5C-W2.4-R
									SP 11Y				
								WALK	SP 11G	14/5C-W2.1-G	14/5C-W2.2-G	14/5C-W2.3-G	14/5C-W2.4-G
								GND. WIRE	GND. BUS	14/5C-W2.1-W	14/5C-W2.2-W	14/5C-W2.3-W	14/5C-W2.4-W
	SP 12	Φ3 Ped	W3.1	W3.2	W3.3	W3.4	W	DON'T WALK	SP 12R	14/5C-W3.1-R	14/5C-W3.2-R	14/5C-W3.3-R	14/5C-W3.4-R
									SP 12Y				
								WALK	SP 12G	14/5C-W3.1-G	14/5C-W3.2-G	14/5C-W3.3-G	14/5C-W3.4-G
								GND. WIRE	GND. BUS	14/5C-W3.1-W	14/5C-W3.2-W	14/5C-W3.3-W	14/5C-W3.4-W
	SP 13								SP 13R				
									SP 13Y				
									SP 13G				
								GND. WIRE	GND. BUS				
	SP 14								SP 14R				
									SP 14Y				
									SP 14G				
								GND. WIRE	GND. BUS				
SPECIAL	SP 15								SP 15R				
									SP 15Y				
									SP 15G				
								GND. WIRE	GND. BUS				
	SP 16								SP 16R				
									SP 16Y				
									SP 16G				
								GND. WIRE	GND. BUS				

AFFIX SEAL: BRIAN C. DANKERT, P.E.
ON: 22-JUN-2021 14:17

ALTERED BY:
ON:

STATE OF NEW YORK — BRIAN C. DANKERT — No. 092443 — LICENSED PROFESSIONAL ENGINEER

AS-BUILT REVISIONS
DESCRIPTION OF ALTERATIONS:

NY 78, TRANSIT ROAD, S.H. 1334A-1
FRENCH ROAD TO WEHRLE DRIVE
TOWNS OF CHEEKTOWAGA & LANCASTER
VILLAGE OF DEPEW
COUNTY: ERIE — REGION: 05

PIN 5813.61
NY 78
UTILITY QUALITY LEVEL D

BRIDGES

CULVERTS

ALL DIMENSIONS IN ft UNLESS OTHERWISE NOTED

TRAFFIC SIGNAL #541P (ERIE) PLAN

CONTRACT NUMBER D264571

DRAWING NO. TSP-48
SHEET NO. 210

IT IS A VIOLATION OF LAW FOR ANY PERSON, UNLESS THEY ARE ACTING UNDER THE DIRECTION OF A LICENSED PROFESSIONAL ENGINEER, ARCHITECT, LANDSCAPE ARCHITECT, OR LAND SURVEYOR, TO ALTER AN ITEM IN ANY WAY. IF AN ITEM BEARING THE STAMP OF A LICENSED PROFESSIONAL IS ALTERED, THE ALTERING ENGINEER, ARCHITECT, LANDSCAPE ARCHITECT, OR LAND SURVEYOR SHALL STAMP THE DOCUMENT AND INCLUDE THE NOTATION "ALTERED BY" FOLLOWED BY THEIR SIGNATURE, THE DATE OF SUCH ALTERATION, AND A SPECIFIC DESCRIPTION OF THE ALTERATION.

NEW YORK STATE OF OPPORTUNITY. Department of Transportation

PROJECT MANAGER S. S. VAIDYA
CHECK BRIAN C. DANKERT
DRAFTING KEITH A. GORECKI
CHECK BRIAN C. DANKERT
DESIGN KEITH A. GORECKI
JOB MANAGER R. F. SCHALLER
DESIGN SUPERVISOR S. S. VAIDYA
FILE NAME = 581361_CPH_TSP_LOC07_5.dgn
DATE/TIME = 22-JUN-2021 14:17
USER = kgorecki

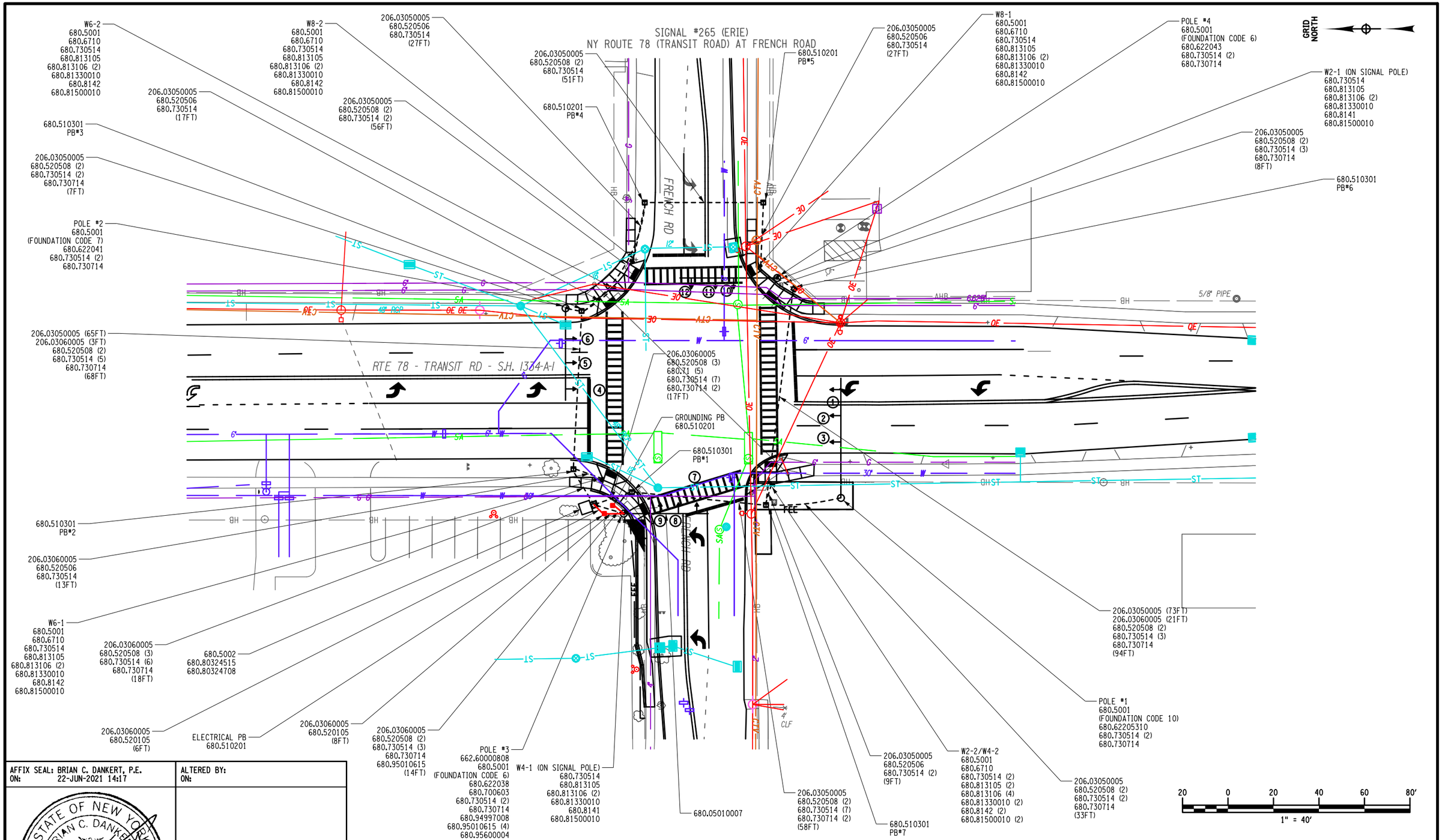

AFFIX SEAL: BRIAN C. DANKERT, P.E.
ON: 22-JUN-2021 14:17

ALTERED BY:
ON:

STATE OF NEW YORK
BRIAN C. DANKERT
No. 092443
LICENSED PROFESSIONAL ENGINEER

AS-BUILT REVISIONS
DESCRIPTION OF ALTERATIONS:

NY 78, TRANSIT ROAD, S.H. 1334A-1
FRENCH ROAD TO WEHRLE DRIVE
TOWNS OF CHEEKTOWAGA & LANCASTER
VILLAGE OF DEPEW
COUNTY: ERIE REGION: 05

PIN 5813.61
NY 78
UTILITY QUALITY LEVEL D

BRIDGES

CULVERTS

ALL DIMENSIONS IN ft UNLESS OTHERWISE NOTED

TRAFFIC SIGNAL #265 (ERIE) PLAN

CONTRACT NUMBER
D264571

DRAWING NO. TSP-49
SHEET NO. 211

IT IS A VIOLATION OF LAW FOR ANY PERSON, UNLESS THEY ARE ACTING UNDER THE DIRECTION OF A LICENSED PROFESSIONAL ENGINEER, ARCHITECT, LANDSCAPE ARCHITECT, OR LAND SURVEYOR, TO ALTER AN ITEM IN ANY WAY. IF AN ITEM BEARING THE STAMP OF A LICENSED PROFESSIONAL IS ALTERED, THE ALTERING ENGINEER, ARCHITECT, LANDSCAPE ARCHITECT, OR LAND SURVEYOR SHALL STAMP THE DOCUMENT AND INCLUDE THE NOTATION "ALTERED BY" FOLLOWED BY THEIR SIGNATURE, THE DATE OF SUCH ALTERATION, AND A SPECIFIC DESCRIPTION OF THE ALTERATION.

NEW YORK STATE OF OPPORTUNITY. Department of Transportation

PROJECT MANAGER S. S. VAIDYA
CHECK BRIAN C. DANKERT
DRAFTING KEITH A. GORECKI
CHECK BRIAN C. DANKERT
DESIGN KEITH A. GORECKI
JOB MANAGER R. F. SCHALLER
DESIGN SUPERVISOR S. S. VAIDYA

FILE NAME = 581361_CPH_TSP_LOC08_1.dgn
DATE/TIME = 22-JUN-2021 14:17
USER = kgorecki

SIGNAL #265 (ERIE)
NY ROUTE 78 (TRANSIT ROAD) AT FRENCH ROAD

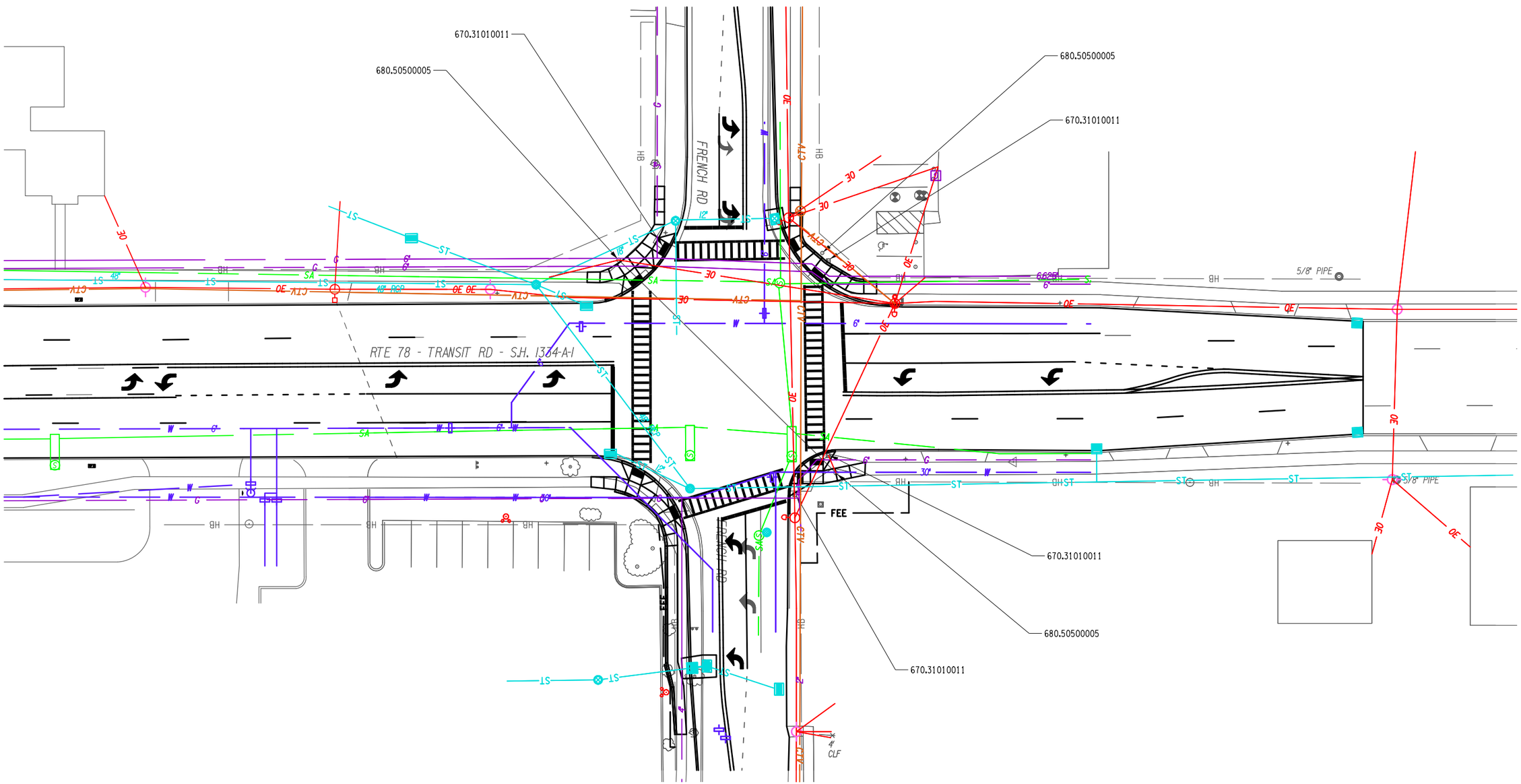

PROJECT MANAGER S. S. VAIDYA
CHECK BRIAN C. DANKERT
DRAFTING KEITH A. GORECKI
CHECK BRIAN C. DANKERT
DESIGN KEITH A. GORECKI
JOB MANAGER R. F. SCHALLER
DESIGN SUPERVISOR S. S. VAIDYA

FILE NAME = 581361_CPH_TSP_LOC08_2.dgn
DATE/TIME = 23-JUN-2021 09:16
USER = kgorecki

AFFIX SEAL: BRIAN C. DANKERT, P.E.
ON: 23-JUN-2021 09:16

STATE OF NEW YORK
BRIAN C. DANKERT
No. 092443
LICENSED PROFESSIONAL ENGINEER

ALTERED BY:
ON:

AS-BUILT REVISIONS
DESCRIPTION OF ALTERATIONS:

NY 78, TRANSIT ROAD, S.H. 1334A-1
FRENCH ROAD TO WEHRLE DRIVE
TOWNS OF CHEEKTOWAGA & LANCASTER
VILLAGE OF DEPEW
COUNTY: ERIE REGION: 05

PIN 5813.61
NY 78
UTILITY QUALITY LEVEL D

BRIDGES

CULVERTS

ALL DIMENSIONS IN ft UNLESS OTHERWISE NOTED

TRAFFIC SIGNAL #265 (ERIE) PLAN

CONTRACT NUMBER
D264571

DRAWING NO. TSP-50
SHEET NO. 212

IT IS A VIOLATION OF LAW FOR ANY PERSON, UNLESS THEY ARE ACTING UNDER THE DIRECTION OF A LICENSED PROFESSIONAL ENGINEER, ARCHITECT, LANDSCAPE ARCHITECT, OR LAND SURVEYOR, TO ALTER AN ITEM IN ANY WAY. IF AN ITEM BEARING THE STAMP OF A LICENSED PROFESSIONAL IS ALTERED, THE ALTERING ENGINEER, ARCHITECT, LANDSCAPE ARCHITECT, OR LAND SURVEYOR SHALL STAMP THE DOCUMENT AND INCLUDE THE NOTATION "ALTERED BY" FOLLOWED BY THEIR SIGNATURE, THE DATE OF SUCH ALTERATION, AND A SPECIFIC DESCRIPTION OF THE ALTERATION.

NEW YORK STATE OF OPPORTUNITY. Department of Transportation

LOCATION 8 - NYSDOT TRAFFIC SIGNAL #265 (ERIE)
NY ROUTE 78 (TRANSIT ROAD) AT FRENCH ROAD

QUANTITY AND ITEM LIST

SIGNAL #265 (ERIE) - NY ROUTE 78 (TRANSIT ROAD) AT FRENCH ROAD

ITEM NO.	DESCRIPTION	UNIT	QTY
206.03050005	CONDUIT EXCAV & BACKFILL (IN ROADWAY)	FT	431
206.03060005	CONDUIT EXCAV & BACKFILL (NOT IN ROADWAY)	FT	100
619.1611	MAINTAIN TRAFFIC SIGNAL EQUIPMENT (REQ A)	MO	8
645.61	OVERHEAD SIGN PANELS	SF	120
662.60000808	FURNISHING ELECTRICAL SERVICE	DC	1
670.31010011	ABANDON EXISTING PULLBOX WITH CLASS A CONCRETE	EA	3
680.05010007	360 DEGREE CAMERA VIDEO DETECTION SYSTEM	EA	1
680.50500005	REMOVE EXISTING FOUNDATION	FT	3
680.5001	POLE EXCAVATION AND CONCRETE FOUNDATION	CY	16
680.5002	CONCRETE BASE FOR CONTROLLER CABINET	EA	1
680.510201	PULLBOX-CIRCULAR, 18" IN DIA., REINFORCED CONCRETE	EA	4
680.510301	PULLBOX-CIRCULAR, 24" IN DIA., REINFORCED CONCRETE	EA	5
680.520105	CONDUIT, STEEL, ZINC COATED, 1-1/2"	FT	14
680.520506	CONDUIT, RIGID PLASTIC, CLASS 1 , 2 NPS	FT	93
680.520508	CONDUIT, RIGID PLASTIC, CLASS 1 , 3 NPS	FT	883
680.622038	SIGNAL POLE-MAST ARM 20' MTD HEIGHT, 38' ARM	EA	1
680.622041	SIGNAL POLE-MAST ARM 20' MTD HEIGHT, 41' ARM	EA	1
680.622043	SIGNAL POLE-MAST ARM 20' MTD HEIGHT, 43' ARM	EA	1
680.62205310	SIGNAL POLE-MAST ARM 20' MTD HEIGHT, 53' ARM, FATIGUE DESIGN	EA	1
680.6710	SIGNAL POLE-POST TOP MOUNT 10' MTD HEIGHT	EA	6
680.700603	RISER ASSEMBLY, 1" DIA.	EA	1
680.730514	SIGNAL CABLE, 5 CONDUCTOR, 14 AWG	FT	2283
680.730714	SIGNAL CABLE, 7 CONDUCTOR, 14 AWG	FT	699
680.79000805	REMOVE TRAFFIC SIGNAL INSTALLATION, LOCATION 8	ELOC	1
680.80324515	INSTALL MICROCOMPUTER CABINET	EA	1
680.80324708	MICROCOMPUTER CABINET BASE (ALUMINUM)	EA	1
680.810101	SIGNAL MODULE - 12 IN, RED BALL LED	EA	8
680.810102	SIGNAL MODULE - 12 IN, RED ARROW LED	EA	4
680.810103	SIGNAL MODULE - 12 IN, YELLOW BALL LED	EA	8
680.810104	SIGNAL MODULE - 12 IN, YELLOW ARROW LED	EA	8
680.810105	SIGNAL MODULE - 12 IN, GREEN BALL LED	EA	8
680.810106	SIGNAL MODULE - 12 IN, GREEN ARROW LED	EA	4
680.810601	SIGNAL SECTION, POLYCARBONITE, TYPE 1, 12IN	EA	40
680.8111	TRAFFIC SIGNAL BRACKET ASSEMBLY - 1 WAY	EA	12
680.813105	PEDESTRIAN SIGNAL MODULE 12IN, BI-MODAL HAND/MAN	EA	8
680.813106	PEDESTRIAN SIGNAL SECTION - POLYCARBONITE, TYPE 1, 12IN.	EA	16
680.81330010	AUDIBLE PEDESTRIAN SIGNAL	EA	8
680.8141	PEDESTRIAN SIGNAL BRACKET MOUNT ASSEMBLY	EA	2
680.8142	PEDESTRIAN SIGNAL TOP MOUNT ASSEMBLY	EA	6
680.81500010	PEDESTRIAN COUNT DOWN TIMER	EA	8
680.81990003	ALUMINUM TRAFFIC SIGNAL HEAD BACK PLATES W/ YELLOW STRIPES	EA	12
680.8205	OVERHEAD SIGN ASSEMBLY, TYPE E	EA	4
680.94997008	F AND I ELECTRICAL DISCONNECT GEN. TRAN SWITCH	EA	1
680.95010615	SERVICE CABLE, 1 CONDUCTOR, 6 AWG	FT	136
680.95600004	ELECTRICAL METER PAN	EA	1

1.) EXISTING PULLBOX LOCATIONS ON PLANS ARE SHOWN BASED ON RECORD PLANS. ACTUAL FIELD LOCATIONS MAY VARY.

2.) ITEM 680.79000805, "REMOVE TRAFFIC SIGNAL INSTALLATION, LOCATION 8" SHALL INCLUDE THE REMOVAL OF THE EXISTING TRAFFIC SIGNAL EQUIPMENT LISTED BELOW. ALL EQUIPMENT LISTED SHALL BE DISPOSED OF AND ONLY LED SERIAL NUMBERS SHALL BE RECORDED AND GIVEN TO NYSDOT TRAFFIC SIGNAL MAINTENANCE CREW.

- ALL EXISTING TRAFFIC SIGNAL EQUIPMENT

SIGNAL HEAD DATA TABLE

FACE \ ITEM	680.810101	680.810102	680.810103	680.810104	680.810105	680.810106	680.810601	680.8111	680.81990003
1	-	1	-	2	-	1	4	1	1
2	1	-	1	-	1	-	3	1	1
3	1	-	1	-	1	-	3	1	1
4	-	1	-	2	-	1	4	1	1
5	1	-	1	-	1	-	3	1	1
6	1	-	1	-	1	-	3	1	1
7	-	1	-	2	-	1	4	1	1
8	1	-	1	-	1	-	3	1	1
9	1	-	1	-	1	-	3	1	1
10	-	1	-	2	-	1	4	1	1
11	1	-	1	-	1	-	3	1	1
12	1	-	1	-	1	-	3	1	1
TOTALS	**8 EA**	**4 EA**	**8 EA**	**8 EA**	**8 EA**	**4 EA**	**40 EA**	**12 EA**	**12 EA**

SIGNAL HEAD LAYOUT

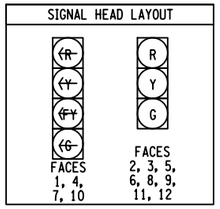

KEY

R - RED BALL
Y - YELLOW BALL
G - GREEN BALL
(R - RED ARROW
(Y - YELLOW ARROW
(FY - FLASHING YELLOW ARROW
(G - GREEN ARROW

TRAFFIC SIGNAL #265 (ERIE)	
POWER SUPPLIER:	
NEW METER #:	
NEW ACCOUNT #:	
BILLING TO:	

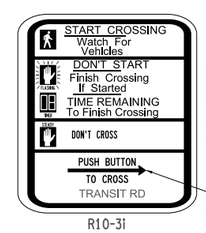

R10-3i

NEW PEDESTRIAN SIGNS SHALL BE SIGN NUMBER R10-3i FROM THE MUTCD.

"TRANSIT RD" FOR W2-1, W2-2, W6-1 & W6-2
"FRENCH RD" FOR W4-1, W4-2, W8-1 & W8-2

ARROW MAY FACE LEFT OR RIGHT, IT IS CONTRACTORS RESPONSIBILITY FOR PROPER ARROW ORIENTATION.

AUDIBLE WIRING NOTE:

THE COST TO FURNISH AND INSTALL WIRING BETWEEN THE AUDIBLE PEDESTRIAN SIGNAL (APS) UNITS AND THEIR RESPECTIVE CONTROL UNITS MOUNTED IN THE PED. HEADS SHALL BE INCLUDED UNDER PROVISIONS OF ITEM 680.81330010.

THE MANUFACTURER'S SUGGESTED CABLES FOR USE WITH AUDIBLE PEDESTRIAN SIGNAL UNITS ARE BELDEN 8489 FOR ABOVE GROUND.

BELDEN 8489, OR EQUIVALENT, SHALL BE USED WITH 680.81330010.

REFER TO "EZCOMMUNICATOR 4 WIRE NAVIGATOR APS SYSTEM INSTALLATION MANUAL" FOR MANUFACTURER'S INSTALLATION DETAILS AND PROCEDURES.

AFFIX SEAL: BRIAN C. DANKERT, P.E.
ON: 22-JUN-2021 14:17

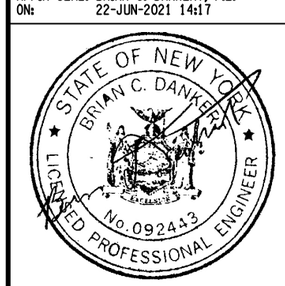

ALTERED BY:
ON:

AS-BUILT REVISIONS
DESCRIPTION OF ALTERATIONS:

NY 78, TRANSIT ROAD, S.H. 1334A-1
FRENCH ROAD TO WEHRLE DRIVE
TOWNS OF CHEEKTOWAGA & LANCASTER
VILLAGE OF DEPEW
COUNTY: ERIE REGION: 05

PIN 5813.61
NY 78
UTILITY QUALITY LEVEL D

BRIDGES

CULVERTS

ALL DIMENSIONS IN ft UNLESS OTHERWISE NOTED

TRAFFIC SIGNAL #265 (ERIE) PLAN

CONTRACT NUMBER D264571

DRAWING NO. TSP-51
SHEET NO. 213

IT IS A VIOLATION OF LAW FOR ANY PERSON, UNLESS THEY ARE ACTING UNDER THE DIRECTION OF A LICENSED PROFESSIONAL ENGINEER, ARCHITECT, LANDSCAPE ARCHITECT, OR LAND SURVEYOR, TO ALTER AN ITEM IN ANY WAY. IF AN ITEM BEARING THE STAMP OF A LICENSED PROFESSIONAL IS ALTERED, THE ALTERING ENGINEER, ARCHITECT, LANDSCAPE ARCHITECT, OR LAND SURVEYOR SHALL STAMP THE DOCUMENT AND INCLUDE THE NOTATION "ALTERED BY" FOLLOWED BY THEIR SIGNATURE, THE DATE OF SUCH ALTERATION, AND A SPECIFIC DESCRIPTION OF THE ALTERATION.

NEW YORK STATE OF OPPORTUNITY. Department of Transportation

DESIGN SUPERVISOR S. S. VAIDYA JOB MANAGER R. F. SCHALLER DESIGN KEITH A. GORECKI CHECK BRIAN C. DANKERT DRAFTING KEITH A. GORECKI CHECK BRIAN C. DANKERT PROJECT MANAGER S. S. VAIDYA

FILE NAME = 581361_CPH_TSP_LOC08_3.dgn
DATE/TIME = 22-JUN-2021 14:17
USER = kgorecki

LOCATION 8 - NYSDOT TRAFFIC SIGNAL #265 (ERIE)
NY ROUTE 78 (TRANSIT ROAD) AT FRENCH ROAD

581361 - NY 78 (TRANSIT RD); FRENCH RD to ELLICOTT CREEK

05-53-265

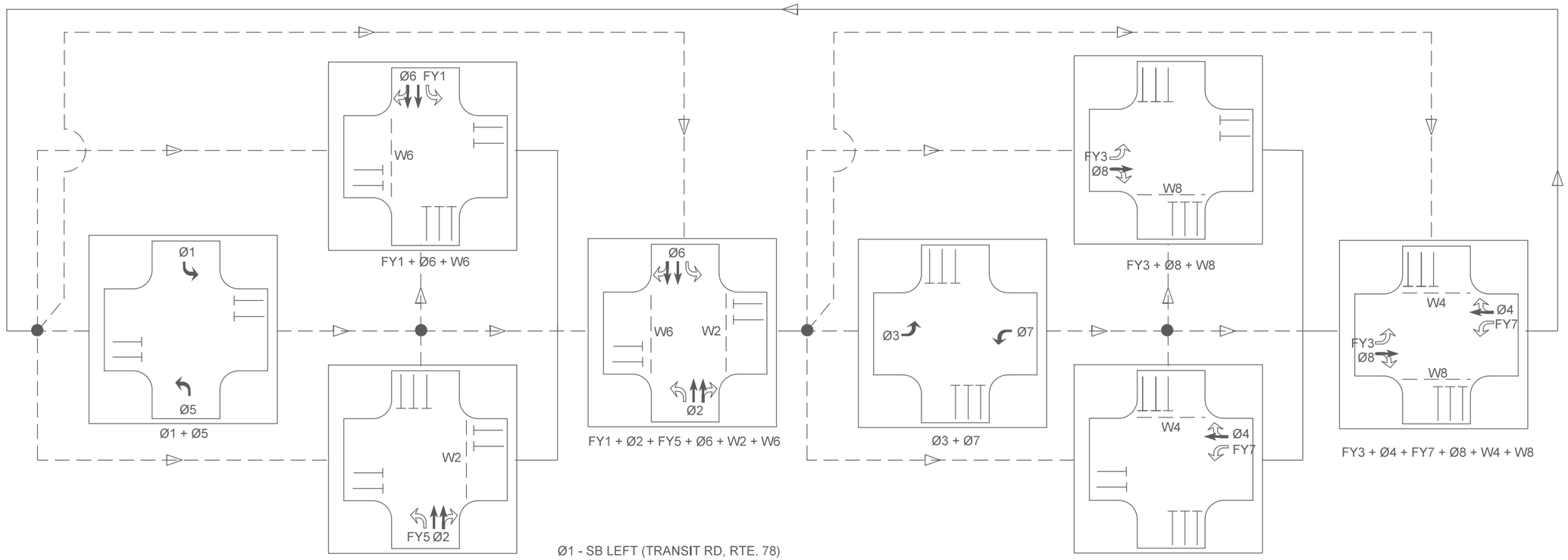

Ø1 - SB LEFT (TRANSIT RD, RTE. 78)
Ø2 - SB THROUGH/RIGHT (TRANSIT RD, RTE. 78)
Ø3 - EB LEFT (FRENCH RD)
Ø4 - WB THROUGH/RIGHT (FRENCH RD)
Ø5 - NB LEFT (TRANSIT RD, RTE. 78)
Ø6 - SB THROUGH/RIGHT (TRANSIT RD, RTE. 78)
Ø7 - WB LEFT (FRENCH RD)
Ø8 - EB THROUGH/RIGHT (FRENCH RD)

FLASHING YELLOW ARROWS
FY1 - OVLP1 (Ø1) - SB LEFT (TRANSIT RD, RTE. 78)
FY3 - OVLP3 (Ø3) - EB LEFT (FRENCH RD)
FY5 - OVLP5 (Ø5) - NB LEFT (TRANSIT RD, RTE. 78)
FY7 - OVLP7 (Ø7) - WB LEFT (FRENCH RD)

W2 - WB APPROACH PEDESTRIAN CROSSING
W4 - SB APPROACH PEDESTRIAN CROSSING
W6 - EB APPROACH PEDESTRIAN CROSSING
W8 - NB APPROACH PEDESTRIAN CROSSING

2/3/2020

AFFIX SEAL: BRIAN C. DANKER, P.E.
ON: 22-JUN-2021 14:17

STATE OF NEW YORK
BRIAN C. DANKER
No. 092443
LICENSED PROFESSIONAL ENGINEER

ALTERED BY:
ON:

AS-BUILT REVISIONS
DESCRIPTION OF ALTERATIONS:

NY 78, TRANSIT ROAD, S.H. 1334A-1
FRENCH ROAD TO WEHRLE DRIVE
TOWNS OF CHEEKTOWAGA & LANCASTER
VILLAGE OF DEPEW
COUNTY: ERIE REGION: 05

PIN 5813.61
NY 78
UTILITY QUALITY LEVEL D

BRIDGES

CULVERTS

ALL DIMENSIONS IN ft UNLESS OTHERWISE NOTED

TRAFFIC SIGNAL #265 (ERIE) PLAN

CONTRACT NUMBER
D264571

DRAWING NO. TSP-52
SHEET NO. 214

IT IS A VIOLATION OF LAW FOR ANY PERSON, UNLESS THEY ARE ACTING UNDER THE DIRECTION OF A LICENSED PROFESSIONAL ENGINEER, ARCHITECT, LANDSCAPE ARCHITECT, OR LAND SURVEYOR, TO ALTER AN ITEM IN ANY WAY. IF AN ITEM BEARING THE STAMP OF A LICENSED PROFESSIONAL IS ALTERED, THE ALTERING ENGINEER, ARCHITECT, LANDSCAPE ARCHITECT, OR LAND SURVEYOR SHALL STAMP THE DOCUMENT AND INCLUDE THE NOTATION "ALTERED BY" FOLLOWED BY THEIR SIGNATURE, THE DATE OF SUCH ALTERATION, AND A SPECIFIC DESCRIPTION OF THE ALTERATION.

NEW YORK STATE OF OPPORTUNITY. Department of Transportation

PROJECT MANAGER S. S. VAIDYA
CHECK BRIAN C. DANKERT
DRAFTING KEITH A. GORECKI
CHECK BRIAN C. DANKERT
DESIGN KEITH A. GORECKI
JOB MANAGER R. F. SCHALLER
DESIGN SUPERVISOR S. S. VAIDYA

FILE NAME = 581361_CPH_TSP_LOC08_4.dgn
DATE/TIME = 22-JUN-2021 14:17
USER = kgorecki

LOCATION 8 - NYSDOT TRAFFIC SIGNAL #265 (ERIE)
NY ROUTE 78 (TRANSIT ROAD) AT FRENCH ROAD

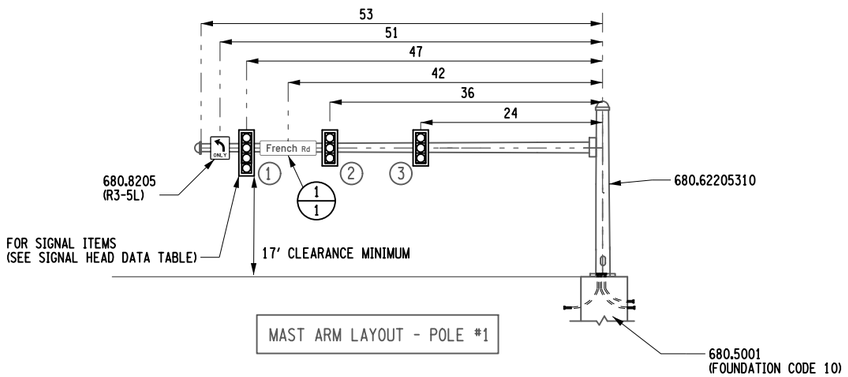

MAST ARM LAYOUT - POLE #1

SIGN FACE DATA TABLE		
ITEM	DESCRIPTION	QTY
680.8205	OVERHEAD SIGN ASSEMBLY, TYPE E	4
4 EACH SIZE 30" X 36"	R3-5L	

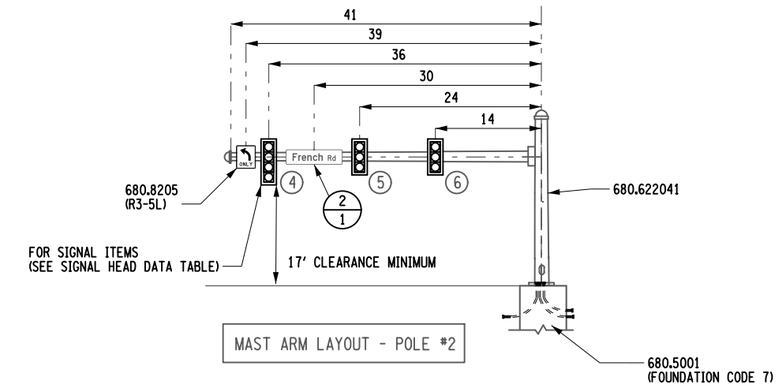

MAST ARM LAYOUT - POLE #2

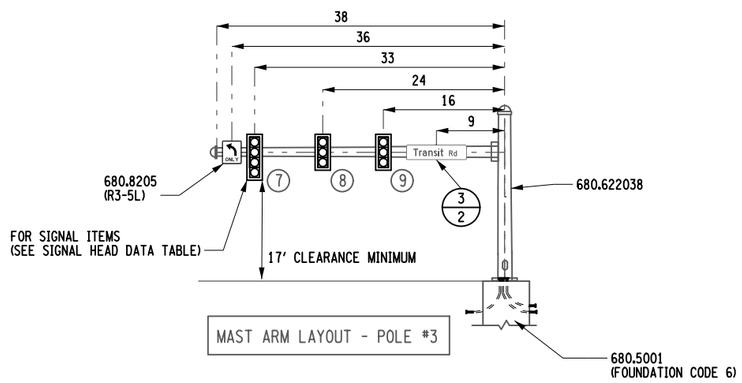

MAST ARM LAYOUT - POLE #3

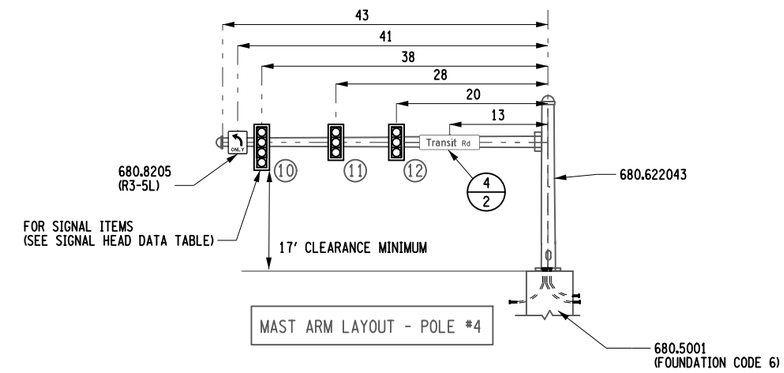

MAST ARM LAYOUT - POLE #4

NOTES:

1) CONDUIT ORIENTATION SHOWN MAY DIFFER FROM REQUIRED ORIENTATION. FIELD VERIFY BEFORE CONDUIT INSTALLATION.

2) DISTANCES SHOWN ARE APPROXIMATE. SIGNAL HEADS AND SIGNS MAY BE ADJUSTED IN THE FIELD WITH APPROVAL OF EIC.

3) POWER METER AND DISCONNECT/TRANSFER SWITCH SHALL BE INSTALLED AS PER STANDARD SHEET 680-05.

4) CONTRACTOR IS RESPONSIBLE THAT POWER METER IS AT A HEIGHT THAT COMPLIES WITH ALL REQUIREMENTS AND ELECTRICAL CODES AS PUT FORTH BY ELECTRICAL UTILITY SUPPLIER.

TEXT NUMBER	LOCATION NUMBER	ITEM NUMBER	PAYMENT FACTOR	TOTAL QUANTITY	TEXT WxH (in)		M.U.T.C.D. NUMBER	MOUNT
1	1, 2 / 2	645.61	30.00 sf	60.00 sf	French Rd BACK TO BACK French Rd	90 X 24	D3-1	OH MTD
2	3, 4 / 2	645.61	30.00 sf	60.00 sf	Transit Rd BACK TO BACK Transit Rd	90 X 24	D3-1	OH MTD

LEGEND	
SYMBOL	DESCRIPTION
GR MTD	GROUND MOUNTED
OH MTD	OVERHEAD MOUNTED
BR MTD	BRIDGE MOUNTED
PO MTD	POLE MOUNTED
	BACK TO BACK

LEGEND
(L/T) NEW SIGN LOCATION
(L) REMOVAL LOCATION
(TR) SIGN TO REMAIN
(L/T) RELOCATE TO POSITION SHOWN
"L" - LOCATION NUMBER
"T" - TEXT NUMBER

GENERAL NOTES:

1. SIGN LOCATIONS AS SHOWN ON PLANS ARE APPROXIMATE. THE CONTRACTOR SHALL RELOCATE EXISTING SIGNS AND INSTALL NEW SIGNS IN ACCORDANCE WITH THE MUTCD AND NYS SUPPLEMENT. THE EIC SHOULD CONTACT THE REGIONAL TRAFFIC ENGINEERING AND SAFETY GROUP WITH QUESTIONS.

2. THE PAYMENT FACTORS FOR SIGNS ARE FROM THE APPLICABLE STANDARD SHEETS OR SIGN FACE LAYOUTS.

3. THE PAYMENT FACTOR FOR POSTS IS THE NUMBER OF POSTS PROVIDED PER INSTALLATION.

AFFIX SEAL: BRIAN C. DANKERT, P.E.
ON: 22-JUN-2021 14:17

ALTERED BY:
ON:

STATE OF NEW YORK · BRIAN C. DANKERT · No. 092443 · LICENSED PROFESSIONAL ENGINEER

AS-BUILT REVISIONS
DESCRIPTION OF ALTERATIONS:

NY 78, TRANSIT ROAD, S.H. 1334A-1
FRENCH ROAD TO WEHRLE DRIVE
TOWNS OF CHEEKTOWAGA & LANCASTER
VILLAGE OF DEPEW
COUNTY: ERIE REGION: 05

PIN 5813.61
NY 78
UTILITY QUALITY LEVEL D

BRIDGES

CULVERTS

ALL DIMENSIONS IN ft UNLESS OTHERWISE NOTED

TRAFFIC SIGNAL #265 (ERIE) PLAN

CONTRACT NUMBER
D264571

DRAWING NO. TSP-53
SHEET NO. 215

IT IS A VIOLATION OF LAW FOR ANY PERSON, UNLESS THEY ARE ACTING UNDER THE DIRECTION OF A LICENSED PROFESSIONAL ENGINEER, ARCHITECT, LANDSCAPE ARCHITECT, OR LAND SURVEYOR, TO ALTER AN ITEM IN ANY WAY. IF AN ITEM BEARING THE STAMP OF A LICENSED PROFESSIONAL IS ALTERED, THE ALTERING ENGINEER, ARCHITECT, LANDSCAPE ARCHITECT, OR LAND SURVEYOR SHALL STAMP THE DOCUMENT AND INCLUDE THE NOTATION "ALTERED BY" FOLLOWED BY THEIR SIGNATURE, THE DATE OF SUCH ALTERATION, AND A SPECIFIC DESCRIPTION OF THE ALTERATION.

NEW YORK STATE OF OPPORTUNITY. Department of Transportation

PROJECT MANAGER S. S. VAIDYA
CHECK BRIAN C. DANKERT
DRAFTING KEITH A. GORECKI
CHECK BRIAN C. DANKERT
DESIGN KEITH A. GORECKI
JOB MANAGER R. F. SCHALLER
DESIGN SUPERVISOR S. S. VAIDYA
FILE NAME = 581361_CPH_TSP_LOC08_5.dgn
DATE/TIME = 22-JUN-2021 14:17
USER = kgorecki

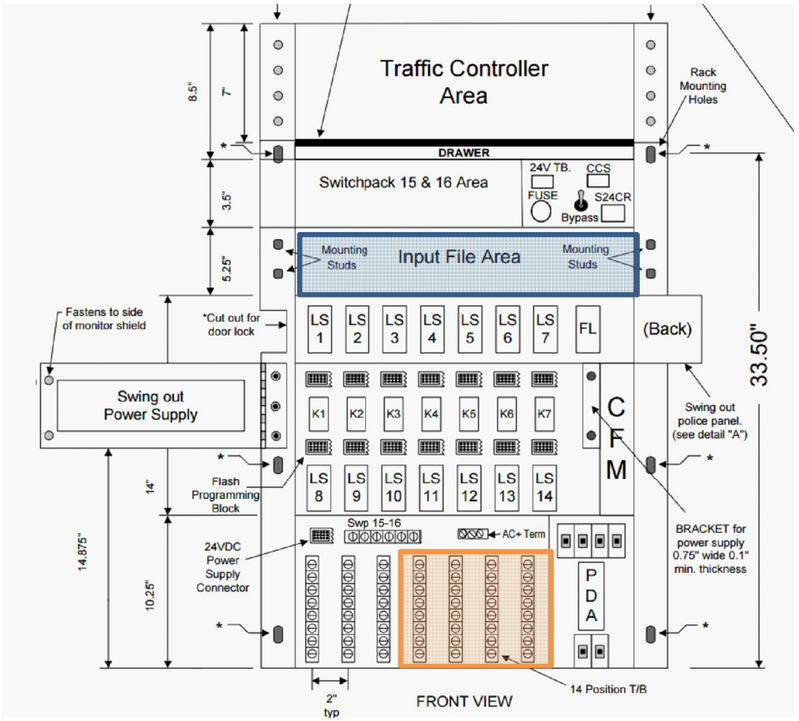

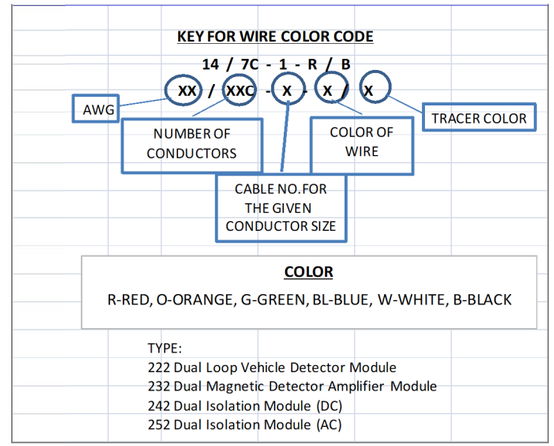

SIGNAL OPERATIONS SPECIFICATIONS — **DATE: 6/4/2021**

TABLE OF INPUT WIRING

SIGNAL NUMBER	05-53-265	COUNTY	Erie	INTERSECTION	Rt 78 @ French Rd

INPUT FILE AREA		FUNCTION		DETECTOR LOCATION ID (PER PLAN)				TERMINAL WIRING BOARD				
SLOT	TYPE	(Φ#/PED #)	DESCRIPTION					TERMINAL	WIRE COLOR CODE			
1 - TOP	Video Card	*Video Card*	*360 Degree Camera*					1A	*AS PER SUPPLIER*			
								1B	*AS PER SUPPLIER*			
1 - BOTTOM								2A				
								2B				
2 - TOP								3A				
								3B				
2 - BOTTOM								4A				
								4B				
3 - TOP								5A				
								5B				
3 - BOTTOM								6A				
								6B				
4 - TOP								7A				
								7B				
4 - BOTTOM								8A				
								8B				
5 - TOP								9A				
								9B				
5 - BOTTOM								10A				
								10B				
6 - TOP								11A				
								11B				
6 - BOTTOM								12A				
								12B				
7 - TOP								13A				
								13B				
7 - BOTTOM								14A				
								14B				
8 - TOP								15A				
								15B				
8 - BOTTOM								16A				
								16B				
9 - TOP								17A				
								17B				
9 - BOTTOM								18A				
								18B				
10 - TOP								19A				
								19B				
10 - BOTTOM								20A				
								20B				
11 - TOP								21A				
								21B				
11 - BOTTOM								22A				
								22B				
12 - TOP								23A				
								23B				
12 - BOTTOM								24A				
								24B				
13 - TOP	242	*Φ2 Ped*	*Crossing French Rd*	*W2.1*	*W2.2*			25A	*14/5C-W2.1-O*	*14/5C-W2.2-O*		
								25B	*14/5C-W2.1-B*	*14/5C-W2.2-B*		
13 - BOTTOM		*Φ4 Ped*	*Crossing Rt 78*	*W4.1*	*W4.2*			26A	*14/5C-W4.1-O*	*14/5C-W4.2-O*		
								26B	*14/5C-W4.1-B*	*14/5C-W4.2-B*		
14 - TOP	242	*Φ6 Ped*	*Crossing French Rd*	*W6.1*	*W6.2*			27A	*14/5C-W6.1-O*	*14/5C-W6.2-O*		
								27B	*14/5C-W6.1-B*	*14/5C-W6.2-B*		
14 - BOTTOM		*Φ8 Ped*	*Crossing Rt 78*	*W8.1*	*W8.2*			28A	*14/5C-W8.1-O*	*14/5C-W8.2-O*		
								28B	*14/5C-W8.1-B*	*14/5C-W8.2-B*		

AFFIX SEAL: BRIAN C. DANKERT, P.E.
ON: 22-JUN-2021 14:17

ALTERED BY:
ON:

AS-BUILT REVISIONS
DESCRIPTION OF ALTERATIONS:

NY 78, TRANSIT ROAD, S.H. 1334A-1
FRENCH ROAD TO WEHRLE DRIVE
TOWNS OF CHEEKTOWAGA & LANCASTER
VILLAGE OF DEPEW
COUNTY: ERIE REGION: 05

PIN 5813.61
NY 78
UTILITY QUALITY LEVEL D

BRIDGES

CULVERTS

ALL DIMENSIONS IN ft UNLESS OTHERWISE NOTED

TRAFFIC SIGNAL #265 (ERIE) PLAN

CONTRACT NUMBER D264571

DRAWING NO. TSP-54
SHEET NO. 216

IT IS A VIOLATION OF LAW FOR ANY PERSON, UNLESS THEY ARE ACTING UNDER THE DIRECTION OF A LICENSED PROFESSIONAL ENGINEER, ARCHITECT, LANDSCAPE ARCHITECT, OR LAND SURVEYOR, TO ALTER AN ITEM IN ANY WAY. IF AN ITEM BEARING THE STAMP OF A LICENSED PROFESSIONAL IS ALTERED, THE ALTERING ENGINEER, ARCHITECT, LANDSCAPE ARCHITECT, OR LAND SURVEYOR SHALL STAMP THE DOCUMENT AND INCLUDE THE NOTATION "ALTERED BY" FOLLOWED BY THEIR SIGNATURE, THE DATE OF SUCH ALTERATION, AND A SPECIFIC DESCRIPTION OF THE ALTERATION.

NEW YORK STATE OF OPPORTUNITY. Department of Transportation

PROJECT MANAGER S. S. VAIDYA
CHECK BRIAN C. DANKERT
DRAFTING KEITH A. GORECKI
CHECK BRIAN C. DANKERT
DESIGN KEITH A. GORECKI
JOB MANAGER R. F. SCHALLER
DESIGN SUPERVISOR S. S. VAIDYA
FILE NAME = 581361_CPH_TSP_LOC08_6.dgn
DATE/TIME = 22-JUN-2021 14:17
USER = kgorecki

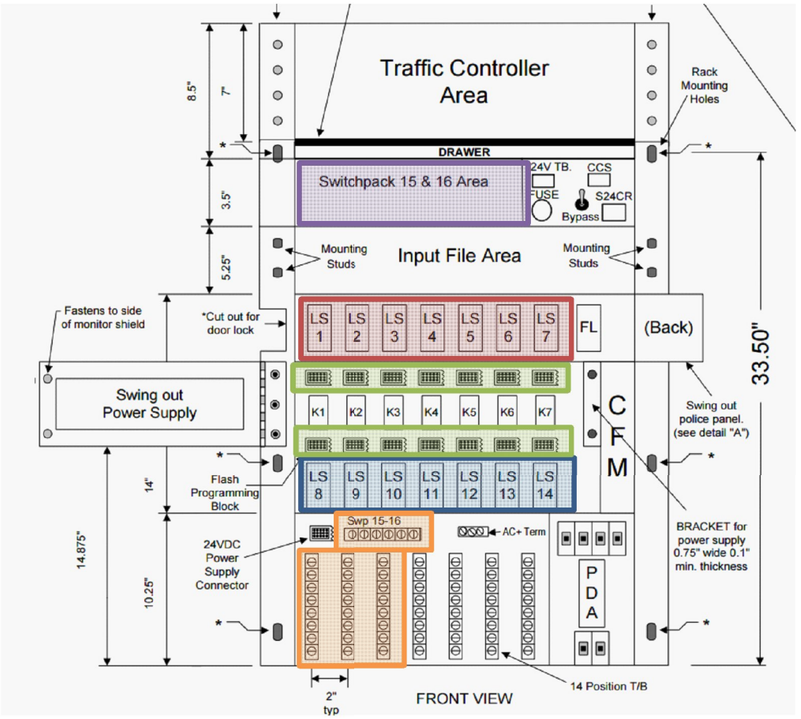

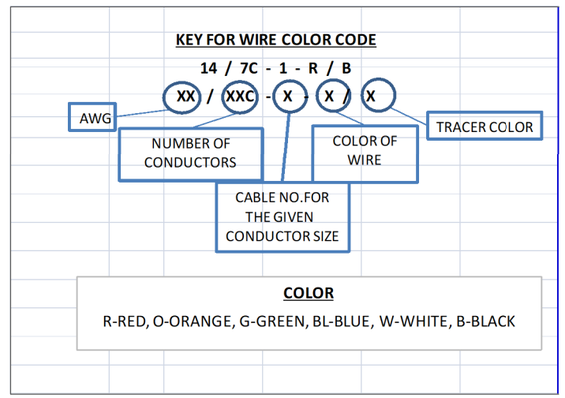

LEGEND

INDICATIONS					
G	= CIRCULAR GREEN	Y	= CIRCULAR YELLOW	R	= CIRCULAR RED
G	= LEFT GREEN ARROW	Y	= LEFT YELLOW ARROW	R	= LEFT RED ARROW
G	= RIGHT GREEN ARROW	Y	= RIGHT YELLOW ARROW	R	= RIGHT RED ARROW
G	= VERT. GREEN ARROW	FY	= FLASHING YELLOW ARROW	WALK	=HAND/MAN
				DON'T WALK	=FLASHING HAD/COUNT DOWN TIMER
FLASH PLUG					
W	=DARK				
R	=FLASH RED				

SIGNAL OPERATIONS SPECIFICATIONS — DATE: 3/4/2021

TABLE OF SWITCH PACKS

SIGNAL NUMBER	05-53-265					COUNTY	Erie	INTERSECTION	Rt 78 @ French Rd			
SWITCH PACK	FUNCTION (Φ#/OVLP)	FACE NUMBERS				FLASH PLUG	INDICATIONS	TERMINAL WIRING BOARD TERMINAL	WIRE COLOR CODE PER FACE			
TOP ROW (LS1-LS7)												
SP 1	OvLap 1 FYA	1				R	R	SP 1R	14/7C-1-R			
							Y	SP 1Y	14/7C-1-Y			
							G	SP 1G	14/7C-1-G			
							GND. BAR	GND. BUS	14/7C-1-W			
SP 2	Φ2	5	6			Y	R	SP 2R	14/5C-5-R	14/5C-6-R		
							Y	SP 2Y	14/5C-5-Y	14/5C-6-Y		
							G	SP 2G	14/5C-5-G	14/5C-6-G		
							GND. WIRE	GND. BUS	14/5C-5-W	14/5C-6-W		
SP 3	OvLap 3 FYA	7				R	R	SP 3R	14/7C-7-R			
							Y	SP 3Y	14/7C-7-Y			
							G	SP 3G	14/7C-7-G			
							GND. WIRE	GND. BUS	14/7C-7-W			
SP 4	Φ4	11	12			R	R	SP 4R	14/5C-11-R	14/5C-12-R		
							Y	SP 4Y	14/5C-11-Y	14/5C-12-Y		
							G	SP 4G	14/5C-11-G	14/5C-12-G		
							GND. WIRE	GND. BUS	14/5C-11-W	14/5C-12-W		
SP 5	OvLap 5 FYA	4				R	R	SP 5R	14/7C-4-R			
							Y	SP 5Y	14/7C-4-Y			
							G	SP 5G	14/7C-4-G			
							GND. WIRE	GND. BUS	14/7C-4-W			
SP 6	Φ6	2	3			Y	R	SP 6R	14/5C-2-R	14/5C-3-R		
							Y	SP 6Y	14/5C-2-Y	14/5C-3-Y		
							G	SP 6G	14/5C-2-G	14/5C-3-G		
							GND. WIRE	GND. BUS	14/5C-2-W	14/5C-3-W		
SP 7	OvLap 7 FYA	10				R	R	SP 7R	14/7C-10-R			
							Y	SP 7Y	14/7C-10-Y			
							G	SP 7G	14/7C-10-G			
							GND. WIRE	GND. BUS	14/7C-10-W			
BOTTOM ROW (LS8-LS14)												
SP 8	Φ8	8	9			R	R	SP 8R	14/5C-8-R	14/5C-9-R		
							Y	SP 8Y	14/5C-8-Y	14/5C-9-Y		
							G	SP 8G	14/5C-8-G	14/5C-9-G		
							GND. WIRE	GND. BUS	14/5C-8-W	14/5C-9-W		
SP 9								SP 9R				
								SP 9Y				
								SP 9G				
							GND. WIRE	GND. BUS				
SP 10								SP 10R				
								SP 10Y				
								SP 10G				
							GND. WIRE	GND. BUS				
SP 11								SP 11R				
								SP 11Y				
								SP 11G				
							GND. WIRE	GND. BUS				
SP 12								SP 12R				
								SP 12Y				
								SP 12G				
							GND. WIRE	GND. BUS				
SPECIAL												
SP 13	Φ2 Ped w/FYA Output	W2.1	W2.2			W	DON'T WALK	SP 13R	14/5C-W2.1-R	14/5C-W2.2-R		
							FY	SP 13Y	14/7C-1-BL			
							WALK	SP 13G	14/5C-W2.1-G	14/5C-W2.2-G		
							GND. WIRE	GND. BUS	14/5C-W2.1-W	14/5C-W2.2-W		
SP 14	Φ4 Ped w/FYA Output	W4.1	W4.2			W	DON'T WALK	SP 14R	14/5C-W4.1-R	14/5C-W4.2-R		
							FY	SP 14Y	14/7C-7-BL			
							WALK	SP 14G	14/5C-W4.1-G	14/5C-W4.2-G		
							GND. WIRE	GND. BUS	14/5C-W4.1-W	14/5C-W4.2-W		
SP 15	Φ6 Ped w/FYA Output	W6.1	W6.2			W	DON'T WALK	SP 15R	14/5C-W6.1-R	14/5C-W6.2-R		
							FY	SP 15Y	14/7C-4-BL			
							WALK	SP 15G	14/5C-W6.1-G	14/5C-W6.2-G		
							GND. WIRE	GND. BUS	14/5C-W6.1-W	14/5C-W6.2-W		
SP 16	Φ8 Ped w/FYA Output	W8.1	W8.2			W	DON'T WALK	SP 16R	14/5C-W8.1-R	14/5C-W8.2-R		
							FY	SP 16Y	14/7C-10-BL			
							WALK	SP 16G	14/5C-W8.1-G	14/5C-W8.2-G		
							GND. WIRE	GND. BUS	14/5C-W8.1-W	14/5C-W8.2-W		

AFFIX SEAL: BRIAN C. DANKERT, P.E.
ON: 22-JUN-2021 14:17

ALTERED BY:
ON:

STATE OF NEW YORK — BRIAN C. DANKERT — No. 092443 — LICENSED PROFESSIONAL ENGINEER

AS-BUILT REVISIONS
DESCRIPTION OF ALTERATIONS:

NY 78, TRANSIT ROAD, S.H. 1334A-1
FRENCH ROAD TO WEHRLE DRIVE
TOWNS OF CHEEKTOWAGA & LANCASTER
VILLAGE OF DEPEW
COUNTY: ERIE — REGION: 05

PIN 5813.61
NY 78
UTILITY QUALITY LEVEL D

BRIDGES

CULVERTS

ALL DIMENSIONS IN ft UNLESS OTHERWISE NOTED

TRAFFIC SIGNAL #265 (ERIE) PLAN

CONTRACT NUMBER D264571

DRAWING NO. TSP-55
SHEET NO. 217

IT IS A VIOLATION OF LAW FOR ANY PERSON, UNLESS THEY ARE ACTING UNDER THE DIRECTION OF A LICENSED PROFESSIONAL ENGINEER, ARCHITECT, LANDSCAPE ARCHITECT, OR LAND SURVEYOR, TO ALTER AN ITEM IN ANY WAY. IF AN ITEM BEARING THE STAMP OF A LICENSED PROFESSIONAL IS ALTERED, THE ALTERING ENGINEER, ARCHITECT, LANDSCAPE ARCHITECT, OR LAND SURVEYOR SHALL STAMP THE DOCUMENT AND INCLUDE THE NOTATION "ALTERED BY" FOLLOWED BY THEIR SIGNATURE, THE DATE OF SUCH ALTERATION, AND A SPECIFIC DESCRIPTION OF THE ALTERATION.

NEW YORK STATE OF OPPORTUNITY. Department of Transportation

DESIGN SUPERVISOR S. S. VAIDYA — JOB MANAGER R. F. SCHALLER — DESIGN KEITH A. GORECKI — CHECK BRIAN C. DANKERT — DRAFTING KEITH A. GORECKI — CHECK BRIAN C. DANKERT — PROJECT MANAGER S. S. VAIDYA

FILE NAME = 581361_CPH_TSP_LOC08_7.dgn
DATE/TIME = 22-JUN-2021 14:17
USER = kgorecki

ITEM 201.06 - CLEARING AND GRUBBING

1. THE CONTRACTOR SHALL CLEAR AND GRUB ALL AREAS INDICATED IN THE CONTRACT DOCUMENTS AND ADBE.

2. THE CONTRACTOR MAY ENCOUNTER NESTING BIRDS DURING THE ADMINISTRATION OF THIS CONTRACT. UNDER THE MIGRATORY BIRD TREATY ACT, IT IS UNLAWFUL TO TAKE, CAPTURE, OR KILL ANY MIGRATORY BIRDS, INCLUDING THEIR FEATHERS, NESTS AND EGGS. THE CONTRACTOR SHOULD SCHEDULE WORK TO MINIMIZE THE POTENTIAL CONFLICT BETWEEN THIS FEDERAL LAW AND WORK OPERATIONS. REFER TO MIGRATORY BIRD PROTECTION AND AVOIDANCE NOTES ON THIS SHEET FOR FURTHER GUIDANCE AND REQUIREMENTS.

3. ALL HEALTHY PLANT MATERIALS CLEARED ON THE JOB SITE MAY BE CHIPPED AND/OR SHREDDED ON-SITE FOR SUBSEQUENT REUSE. CHIPPED AND SHREDDED MATERIAL MUST BE ACCEPTABLE TO AND LOCATIONS SHALL BE APPROVED BY THE EIC IN COORDINATION WITH THE REGIONAL LANDSCAPE ARCHITECT PRIOR TO ACCEPTANCE AND DISTRIBUTION. MATERIAL FROM DISEASED PLANTS SHALL BE DEALT WITH AS PER SECTION 107-01

4. CLEARING AND GRUBBING OPERATIONS MAY RESULT IN THE REMOVAL OF ASH (FRAXINUS SPP.) OR OTHER SPECIES INFESTED WITH INVASIVE SPECIES. REFER TO THE "SPECIAL HANDLING OF ASH SPECIES MATERIALS" NOTE BELOW, AS WELL AS NYSDOT STANDARD SPECIFICATIONS SECTION 107-01 AND SPECIFICALLY SECTION 107-01C INVASIVE SPECIES FOR ALL APPLICABLE FEDERAL AND STATE REGULATIONS.

SPECIAL HANDLING OF ASH SPECIES MATERIALS

A. TREE FELLING, CLEARING AND GRUBBING OPERATIONS AT PROJECT SITE MAY RESULT IN THE CONTRACTOR'S NEED TO HANDLE MATERIALS FROM ASH TREE SPECIES AND / OR FIREWOOD.

B. ASH TREE PARTS AND PIECES SHALL BE TREATED AND HANDLED AS IF INFESTED WITH EMERALD ASH BORER (EAB), A PROHIBITED INVASIVE SPECIES PER 6 NYCRR PART 575, WHETHER OR NOT ACTUALLY INFESTED. THE FOLLOWING ARE ACCEPTED AND PERMITTED PRACTICES WHICH MAY BE EMPLOYED BY THE CONTRACTOR WHEN HANDLING ASH MATERIALS, AS DIRECTED BY THE ENGINEER-IN-CHARGE (EIC).

<u>DURING THE ACTIVE PERIOD FOR EAB ADULTS - MAY 1" THROUGH AUGUST 31"</u>,
ASH WOOD, FIREWOOD, LOGS AND STUMPS (INTACT OR GRUBBED) SHALL BE:
1. LEFT INTACT ONSITE IN LOCATIONS APPROVED BY THE EIC.
<u>OR</u>
2. CHIPPED TO LESS THAN 1" SIZE CHIPS IN TWO OF THE THREE DIMENSIONS (NYSDOT STANDARD SPECIFICATIONS 713-05 "USDA PROTOCOL"). THE CHIPS MAY BE LEFT ON SITE OR TRANSPORTED FOR UTILIZATION OR DISPOSAL.
<u>OR</u>
3. STRIPPED OF ALL BARK AND AT LEAST THE OUTERMOST 1" OF WOOD. BARK AND THE OUTERMOST 1" OF WOOD SHALL BE LEFT ON SITE. THE REMAINING WOOD CAN BE TRANSPORTED FOR UTILIZATION OR DISPOSAL.

<u>DURING THE DORMANT PERIOD FOR EAB ADULTS, SEPTEMBER 1" THROUGH APRIL 30"</u>ASH WOOD, FIREWOOD, LOGS AND STUMPS (INTACT OR GRUBBED) SHALL BE:
1. TREATED AND HANDLED AS DESCRIBED IN ANY OF THE ACTIONS LISTED ABOVE
<u>OR</u>
2. TRANSPORTED TO A KILN OR MILL FOR PROCESSING BEFORE MAY 1"

C. ASH WOOD CHIPS FROM SOURCES KNOWN OR SUSPECTED TO CONTAIN EAB PESTS SHALL NOT BE USED FOR MULCHING NEW PLANTINGS, PLANT BEDS OR TURF SEEDED AREAS ON THE PROJECT SITES.

INVASIVE SPECIES MANAGEMENT AT CONTRACTOR STAGING AREAS

1. THE CONTRACTOR SHALL TAKE ALL PRUDENT AND REASONABLE EFFORTS TO SELECT STAGING AREAS THAT ARE FREE FROM THE INFESTATION OF THE FOLLOWING INVASIVE PLANT SPECIES; PHRAGMITES (PHRAGMITES AUSTRALIS), JAPANESE KNOTWEED (POLYGONUM CUSPIDATUM), PURPLE LOOSESTRIFE (LYTHRUM SALICARIA) AND GIANT HOGWEED (HERACLEUM MANTEGAZZIANUM).

2. IF INVASIVE PLANT SPECIES ARE IN CLOSE PROXIMITY TO STAGING OPERATIONS, THE CONTRACTOR SHOULD TAKE THE NECESSARY STEPS TO ASSURE THAT NO INVASIVE SPECIES PLANT PARTS COME IN CONTACT WITH CONSTRUCTION VEHICLES, EQUIPMENT AND MATERIALS.

3. IF CONTACT IS UNAVOIDABLE, AS PER SECTION 107-01C INVASIVE SPECIES OF THE STANDARD SPECIFICATIONS, THE CONTRACTOR IS RESPONSIBLE FOR CLEANING THE INFECTED EQUIPMENT. THIS PROCEDURE IS REQUIRED IN ORDER TO MINIMIZE THE POSSIBILTY OF TRANSPORTING THE INVASIVE SPECIES OFF THE IMMEDIATE SATGING AREA AND ONTO STATE HIGHWAYS OR THE PROJECT SITE.

THREATENED AND ENDANGERED SPECIES

1. THE NORTHERN LONG EARED BAT (MYOTIS SEPTENTRONALIS) IS LISTED AS A FEDERALLY THREATENED SPECIES STATEWIDE. THIS PROJECT ANTICIPATES THE REMOVAL OF UP TO TWENTY-SEVEN (27) TREES GREATER THAN THREE (3) INCHES IN DIAMETER (DIAMETER BREAST HEIGHT (DBH)). THE TREE REMOVALS ARE APPROVED FOR THE CUTTING WINDOW OF AUGUST 1ST TO APRIL 30TH. IF PROJECT CONDITIONS CHANGE AND ADDITIONAL TREE REMOVALS ARE NECESSARY, WHETHER UNDER CLEARING AND GRUBBING OR TREE REMOVALS, THE ENGINEER MUST BE NOTIFIED PRIOR TO THE START OF ANY ADDITIONAL TREE REMOVALS. ADDITIONAL TREE REMOVALS WILL BE ALLOWED ONLY AFTER COORDINATION AND APPROVAL BY THE ENGINEER IN CONSULTATION WITH THE CONSTRUCTION ENVIRONMENTAL COORDINATOR.

SIGNS OF CONTAMINATION

1. IF, DURING EXCAVATION AT ANY LOCATION, SIGNS OF CONTAMINATION ARE ENCOUNTERED, THE CONTRACTOR SHALL IMMEDIATELY STOP WORK AND NOTIFY THE EIC. SIGNS OF CONTAMINATION INCLUDE, BUT ARE NOT LIMITED TO: ODOR, OILY SHEEN, SLUDGE, SOIL STAINING AND UNUSUAL FILL MATERIAL OR UNDERGROUND IMPEDIMENTS. THE EIC SHALL IMMEDIATELY NOTIFY THE CONSTRUCTION ENVIRONMENTAL COORDINATOR.

ASBESTOS

THE CONTRACTOR IS CAUTIONED THAT MATERIALS CONTAINING ASBESTOS EXIST IN THE FORM OF:

1. VERIZON UNDERGROUND TRANSITE CONDUIT AT APPROXIMATE STATION LOCATIONS:
113+13 RT 59.2 TO 113+56 RT 45.4

2. VERIZON UNDERGROUND TRANSITE CONDUIT RUNNING PERPENDICULAR TO THE ROAD AT APPROXIMATE STATION LOCATIONS:
a. 147+07
b. 149+60
c. 152+75
d. 162+33

3. ERIE COUNTY SEWER SANITARY PIPES AT STATION 124+25 TO 136+90, LOCATED ALONG THE EAST SIDE OF TRANSIT FROM WEHRLE TO GENESEE STREET.

THESE MATERIALS HAVE BEEN IDENTIFIED BY THE UTILITIES VERIZON AND ERIE COUNTY SEWER. UNLESS OTHERWISE INDICATED ON THE PLANS, WORK TO BE PERFORMED UNDER THIS CONTRACT DOES NOT REQUIRE DISTURBING, DESTRUCTION OR REMOVAL OF ANY KNOWN MATERIALS CONTAINING ASBESTOS. UNLESS OTHERWISE INDICATED ON THE PLANS, IT IS THE EXPRESSED INTENT OF THIS CONTRACT THAT THESE MATERIALS NOT BE DISTURBED IN ANY WAY. SHOULD THE CONTRACTOR BE FORCED TO DISTURB ANY ASBESTOS CONTAINING MATERIALS WHILE PERFORMING WORK ON THE STRUCTURE, THE CONTRACTOR SHALL EMPLOY A CERTIFIED ASBESTOS ABATEMENT CONTRACTOR TO HANDLE AND FOLLOW INDUSTRIAL CODE RULE 56 OF THE N.Y.S. DEPARTMENT OF LABOR. THE CONTRACTOR SHALL ALSO OBTAIN PRIOR WRITTEN AUTHORIZATION TO PROCEED FROM THE CONSTRUCTION ENVIRONMENTAL COORDINATOR (CEC).

MIGRATORY BIRD PROTECTION AND AVOIDANCE

1. UNDER THE MIGRATORY BIRD TREATY ACT, (MBTA) IT IS UNLAWFUL BY ANY MEANS OR MANNER, TO INTENTIONALLY OR UNINTENTIONALLY TAKE, CAPTURE OR KILL ANY MIGRATORY BIRD, UNLESS A FEDERAL PERMIT IS FIRST SECURED.

2. PROTECTED MIGRATORY BIRDS INCLUDE ALL WATERFOWL, HERONS, HAWKS, OWLS, EAGLES AND SONGBIRDS, INCLUDING SWALLOWS AND EASTERN PHOEBES. THEIR FEATHERS, NESTS, AND EGGS ARE ALSO PROTECTED UNDER THE MBTA.

3. EXEMPT, OR NOT AFFORDED PROTECTION UNDER THE MBTA, ARE ROCK DOVES (DOMESTIC PIGEONS), HOUSE SPARROWS (ENGLISH SPARROWS), EUROPEAN STARLINGS, AND MONK PARAKEETS. ALTHOUGH THESE SPECIES ARE NOT PROTECTED UNDER THE ACT, THEY SHOULD STILL BE TREATED AS HUMANELY AS POSSIBLE. THE CONTRACTOR SHALL NOTIFY THE EIC AND THE EIC WILL ALERT THE CONSTRUCTION ENVIRONMENTAL COORDINATOR (CEC), WHEN ACTIVE NESTS OF THE ABOVE SPECIES ARE FOUND. THE EIC AND THE CEC WILL EVALUATE THE POTENTIAL FOR REMOVING THE YOUNG FROM THE NEST TO BE RAISED BY A WILDLIFE REHABILITATOR.

4. BRIDGE CLEANING AND/OR REPAIR, BRIDGE REPLACEMENT: BRIDGES SCHEDULED FOR CLEANING, REPAIR OR REPLACEMENT SHALL BE INSPECTED BY THE DOT FOR BIRD NESTING ACTIVITY PRIOR TO COMMENCING ANY CONTRACT RELATED ACTIVITY. IDEALLY THIS WOULD INVOLVE A SCREENING OF ALL POTENTIAL BRIDGE LOCATIONS FOR BIRD ACTIVITY AND BIRD NESTS BEFORE WORK OPERATIONS BEGIN.

5. CLEARING AND GRUBBING OPERATIONS: MIGRATORY BIRDS CAN ALSO BE FOUND IN TREES, BRUSH AND OPEN FIELDS. ALL AREAS OF CLEARING AND GRUBBING, STAGING AREAS OR OTHER AREAS OF POTENTIAL DISTURBANCE SHALL BE INSPECTED BY THE CONTRACTOR FOR BIRD NESTING ACTIVITY PRIOR TO COMMENCING ANY DISTURBANCE ACTIVITY. THE CONTRACTOR SHALL SCHEDULE WORK TO MINIMIZE THE POTENTIAL CONFLICT BETWEEN THIS FEDERAL LAW AND WORK OPERATIONS.

6. LOCATIONS THAT ARE IDENTIFIED AS CONTAINING OR HARBORING ACTIVE MIGRATORY BIRD NESTS SHALL BE EVALUATED FOR POTENTIAL IMPACTS OR ILLEGAL TAKING OF MIGRATORY BIRDS, NESTS OR EGGS. IF A NEST (OR NESTS) IS IDENTIFIED BY THE CONTRACTOR ON A BRIDGE BETWEEN APRIL 15 AND AUGUST 15 (POTENTIAL BREEDING SEASON), IT SHOULD BE OBSERVED FOR A PERIOD OF SEVERAL HOURS TO DETERMINE IF IT IS ACTIVE OR NOT. AN ACTIVE NEST DURING THE BREEDING SEASON IS INDICATED BY ADULT BIRDS CONSTRUCTING THE NEST, BIRDS COMING AND GOING FROM THE NEST, SOUNDS OF YOUNG IN THE NEST, OR BIRD SPECIES MATCHING THE BIRD NEST TYPE FLYING IN THE VICINITY OF THE NESTS. IF NONE OF THESE ACTIVITIES ARE OBSERVED, THEN THE NEST CAN BE ASSUMED INACTIVE AND CAN BE REMOVED AND MAINTENANCE/CONSTRUCTION ACTIVITIES CAN BEGIN.

WATER QUALITY PROTECTION

1. THE CONTRACTOR SHALL PROTECT ALL WATER RESOURCES WITHIN THE CONTRACT LIMITS AND ON LANDS ADJACENT TO OR AFFECTED BY THE WORK.

2. REFER TO SECTION 107-12 OF NYSDOT STANDARD SPECIFICATIONS FOR CONTRACTOR WATER QUALITY PROTECTION RESPONSIBILITIES AND REQUIREMENTS.

SOIL EROSION AND SEDIMENT CONTROL

1. ALL EROSION AND SEDIMENT CONTROL MEASURES SHALL BE PLACED PRIOR TO STARTING EARTHWORK OPERATIONS AND SHALL REMAIN IN PLACE UNTIL THE SOIL IS STABILIZED WITH SEEDIN AND/OR MULCH.

2. THE LOCATIONS OF EROSION AND SEDIMENT CONTROL MEASURES, AS INDICATED ON THE PLANS MAY REQUIRE FIELD ADJUSTMENTS DEPENDING ON THE SEQUENCE OF CONSTRUCTION ACTIVITIES, CONSTRUCTION METHODS, AND/OR ACTUAL FIELD CONDITIONS. THE E.I.C SHALL BE NOTIFIED OF ANY SIGNIFICANT FIELD CHANGES TO THE EROSION AND SEDIMENT CONTOROL MEASURES INDICATED IN THE PLAN.

3. REFER TO NYSDOT STANDARD SHEETS 209-1 THROUGH 209-7 FOR ADDITIONAL INFORMATION REGARDING THE APPLICATION, INSTALLATION AND INSPECTION REQUIREMENTS OF SOIL EROSION AND SEDIMENT CONTROL MEASURES.

STORMWATER / SPDES

1. STORMWATER DISCHARGES FROM PROJECT CONSTRUCTION ACTIVITY ARE REGULATED UNDER THE NEW YORK STATE POLLUTANT DISCHARGE ELIMINATION SYSTEM (SPDES).

2. A SPDES PERMIT HAS BEEN OBTAINED FOR WORK AT THIS SITE. ALL CONTRACTORS/ SUBCONTRACTORS SHALL BE FAMILIAR WITH THE NEW YORK STATE DEPARTMENT OF ENVIRONMENTAL CONSERVATION (DEC) SPDES GENERAL PERMIT FOR STORMWATER DISCHARGES FROM CONSTRUCTION ACTIVITY (GP-0-20-001) AND COMPLY WITH ALL CONDITIONS OF THAT PERMIT.

3. A STORMWATER POLLUTION PREVENTION PLAN (SWPPP) HAS BEEN PREPARED FOR THE SITE. ALL CONTRACTORS AND SUBCONTRACTORS INVOLVED WITH THE PROJECT MUST BE FAMILIAR WITH THE SWPPP AND SIGN THE CONTRACTOR/ SUBCONTRACTOR SPDES PERMIT CERTIFICATION (CONR-5).

SECTION 404 AND 401 PERMITS

1. FILLS AND OTHER CONSTRUCTION ACTIVITIES NECESSARY FOR COMPLETION OF THIS PROJECT ARE SUBJECT TO SECTIONS 404 AND 401 OF THE FEDERAL CLEAN WATER ACT.

2. THIS PROJECT MEETS THE CRITERIA ESTABLISHED FOR NATIONWIDE PERMIT NUMBER 3, (NWP-3, MAINTENANCE) AUTHORIZED BY THE US ARMY CORPS OF ENGINEERS (USACE) IN SATISFACTION OF SECTION 404 PERMIT REQUIREMENTS.

3. THE NEW YORK STATE DEPARTMENT OF ENVIRONMENTAL CONSERVATION (NYSDEC) ADMINISTERS PROVISIONS OF SECTION 401 OF THE CLEAN WATER ACT THROUGH ISSUANCE OF WATER QUALITY CERTIFICATION. THE NYSDEC HAS CERTIFIED THAT ACTIVITIES AUTHORIZED BY NWP-3 FOR THIS PROJECT ALSO COMPLY WITH SECTION 401 PROVISIONS OF THE ACT AND APPLICABLE NEW YORK STATE WATER QUALITY STANDARDS.

4. THE NYSDOT IS RESPONSIBLE FOR ENSURING THAT THE CONTRACTOR AND/OR WORKERS EXECUTING THE ACTIVITIES AUTHORIZED BY THIS PERMIT HAVE KNOWLEDGE OF THE TERMS AND CONDITIONS OF THE AUTHORIZATION AND THAT A COPY OF THE PERMIT DOCUMENT IS AT THE PROJECT SITE.

5. AUTHORIZATION OF AN ACTIVITY BY A NWP DOES NOT AUTHORIZE THE 'TAKE' OF A THREATENED OR ENDANGERED SPECIES AS DEFINED IN THE ENDANGERED SPECIES ACT.

STREAM NOTES

1. STREAM RESTRICTION DATES HAVE BEEN PROVIDED BY NYSDEC - THERE ARE STREAM RESTRICTION DATES OF APRIL 1ST - JUNE 15TH FOR BIN 1030250.

2. NO MATERIAL SHALL BE ALLOWED TO BE DROPPED INTO THE STREAM CHANNEL. ANY DEBRIS OR EXCESS MATERIALS FROM CONSTRUCTION OF THIS PROJECT SHALL BE IMMEDIATELY AND COMPLETELY REMOVED FROM THE BED AND BANKS OF ALL WATER AREAS TO AN APPROPRIATE UPLAND AREA FOR DISPOSAL.

3. ALL IN-STREAM WORK SHALL BE CONDUCTED DURING PERIODS OF LOW FLOW, A.O.B.E. IN COORDINATION WITH THE REGIONAL ENVIRONMENTAL CONTACT. NO IN-STREAM WORK SHALL OCCUR DURING PREDICTED PERIODS OF HIGH FLOW.

4. DISTURBANCE TO THE BED AND BANKS OF THE STREAM, LAKE, OR WETLAND SHALL BE KEPT TO THE MINIMUM NECESSARY TO COMPLETE THE PROJECT.

5. TEMPORARY WATER DIVERSION STRUCTURES SHALL NOT BE COMPOSED OF ERODIBLE FILL (LOOSE SAND, SOILS, RIP RAP, ETC). WATER DIVERSION STRUCTURES SHALL BE NON-ERODIBLE AND APPROVED BY THE E.I.C PRIOR TO INSTALLATION.

ARTICLE 24 FRESHWATER WETLANDS

1. A NEW YORK STATE DEPARTMENT OF ENVIRONMENTAL CONSERVATION (NYSDEC) 100-FOOT REGULATED ADJACENT AREA EXISTS WITHIN THE PROJECT LIMITS. NO TEMPORARY OR PERMANENT FILL SHALL BE ALLOWED WITHIN THE WETLAND AND ONLY FILLS SPECIFIED IN THE NYSDEC ARTICLE 24 FRESHWATER WETLANDS PERMIT SHALL BE ALLOWED WITHIN THE 100 FOOT REGULATED ADJACENT AREA. WORK WITHIN THE NYSDEC WETLAND SHALL BE AVOIDED IN SATISFACTION OF NYS ECL ARTICLE 24 PERMIT REQUIREMENTS.

SITE STABILIZATION

1. MINIMIZE EXPOSED SOILS WHEREVER POSSIBLE. THIS CAN BE ACCOMPLISHED THROUGH PROPER CONSTRUCTION SEQUENCING AND USE OF MULCH AND TEMPORARY SEEDING. USE ITEM 209.1003 TEMPORARY SEED AND MULCH (SY).

2. THE CONTRACTOR SHALL INITIATE STABILIZATION MEASURES AS SOON AS PRACTICABLE IN PORTIONS OF THE SITE WHERE CONSTRUCTION ACTIVITIES HAVE TEMPORARILY OR PERMANENTLY CEASED, BUT IN NO CASE MORE THAN 14 DAYS AFTER THE CONSTRUCTION ACTIVITY IN THAT PORTION OF THE SITE HAS TEMPORARILY OR PERMANENTLY CEASED.

AFFIX SEAL: A.B. VILONEN
ON: 22-JUN-2021 14:39

ALTERED BY:
ON:

AS-BUILT REVISIONS
DESCRIPTION OF ALTERATIONS:

NY 78, TRANSIT ROAD, S.H. 1334A-1
FRENCH ROAD TO WEHRLE DRIVE
TOWNS OF CHEEKTOWAGA & LANCASTER
VILLAGE OF DEPEW
COUNTY: ERIE REGION: 05

PIN 5813.61
NY 78
UTILITY QUALITY LEVEL D

BRIDGES

CULVERTS

ALL DIMENSIONS IN ft UNLESS OTHERWISE NOTED

LANDSCAPE ENVIRONMENTAL NOTES

CONTRACT NUMBER
D264571

DRAWING NO. LEN-1
SHEET NO. 218

IT IS A VIOLATION OF LAW FOR ANY PERSON, UNLESS THEY ARE ACTING UNDER THE DIRECTION OF A LICENSED PROFESSIONAL ENGINEER, ARCHITECT, LANDSCAPE ARCHITECT, OR LAND SURVEYOR, TO ALTER AN ITEM IN ANY WAY. IF AN ITEM BEARING THE STAMP OF A LICENSED PROFESSIONAL IS ALTERED, THE ALTERING ENGINEER, ARCHITECT, LANDSCAPE ARCHITECT, OR LAND SURVEYOR SHALL STAMP THE DOCUMENT AND INCLUDE THE NOTATION "ALTERED BY" FOLLOWED BY THEIR SIGNATURE, THE DATE OF SUCH ALTERATION, AND A SPECIFIC DESCRIPTION OF THE ALTERATION.

NEW YORK STATE OF OPPORTUNITY. Department of Transportation

DESIGN SUPERVISOR R. F. SCHALLER JOB MANAGER R. F. SCHALLER DESIGN P. J. PASNIK CHECK A. B. VILONEN DRAFTING P. J. PASNIK CHECK A. B. VILONEN PROJECT MANAGER R. F. SCHALLER
FILE NAME = 581361_oph_lnd_env_not.dgn
DATE/TIME = 22-JUN-2021 14:39
USER = avilonen

PLANTING TABLE

LOCATION						PLANT LIST		PLANTING				ESTABLISHMENT	
ADDRESS TRANSIT	BUSINESS/RESIDENCE	STATION	OFF SET	SIDE	LARGE COLUMNAR OR WIRE FRIENDLY TREE	BOTANICAL NAME	COMMON NAME	ITEM 611.0151 PLANTING MAJOR DECIDUOUS TREES - 2" CALIPER	ITEM 611.19010024 POST PLANTING CARE W/ REPLACEMENT - MAJOR DECIDUOUS TREES	ITEM 611.13 TRANSPLANT TREE OVER 3" TO 6" DBH	STAKING REQUIRED UNDER 611 ITEM	ITEM 611.17 PORTABLE DRIP IRRIGATION SYSTEM	ITEM 610.19 WATERING VEGETATION
6461	SALVATORES	101 + 67	48.5	RT	WF	MALUS 'PRAIRIEFIRE'	CRABAPPLE (OR APPROVED EQUIVALENT)	1	1		Y	1	WATERING VEGETATON ON LAT-02
6461	SALVATORES	102 + 8.5	49	RT	WF	MALUS 'PRAIRIEFIRE'	CRABAPPLE (OR APPROVED EQUIVALENT)	1	1		Y	1	
6490	MAVIS	102 + 49	53	LT		SYRINGA RETICULATA	JAPANESE TREE LILAC	1	1		Y	1	
6461	SALVATORES	103 + 10	46	RT	WF	MALUS 'PRAIRIEFIRE'	CRABAPPLE (OR APPROVED EQUIVALENT)	1	1		Y	1	
6490	MAVIS	102 + 88	53	LT		SYRINGA RETICULATA	JAPANESE TREE LILAC	1	1		Y	1	
6461	SALVATORES	103 + 40	46	RT	WF	MALUS 'PRAIRIEFIRE'	CRABAPPLE (OR APPROVED EQUIVALENT)	1	1		Y	1	
6461	SALVATORES	104 +85	57	RT	WF	CRATAEGUS X LAVALLEI	LAVALLE HAWTHORN	1	1		Y	1	
6470	RIVERSIDE MENS	105 + 12	55	LT	WF	AMELANCHIER ARBOREA	DOWNY SERVICEBERRY	1	1		Y	1	
6461	SALVATORES	105 +25	57	RT	WF	CRATAEGUS X LAVALLEI	LAVALLE HAWTHORN	1	1		Y	1	
6470	RIVERSIDE MENS	105 + 50	55	LT	WF	AMELANCHIER ARBOREA	DOWNY SERVICEBERRY	1	1		Y	1	
6470	RIVERSIDE MENS	105 + 88	52	LT	WF	AMELANCHIER ARBOREA	DOWNY SERVICEBERRY	1	1		Y	1	
6450	LOVULLO & ASSOCIATES	110 + 30	52	LT	LG	ACER GINNALA	AMUR MAPLE (TREE FORM)	1	1		Y	1	
11 PLEASANTVIEW ON TRANSIT	HILLVEW SCHOOL	114 + 00	58	RT	LG	GINKGO BILOBA	GINKGO (MALE ONLY)	1	1		Y	1	
"	HILLVEW SCHOOL	114 + 25	58	RT	LG	GINKGO BILOBA	GINKGO (MALE ONLY)	1	1		Y	1	
"	HILLVEW SCHOOL	114 + 50	58	RT	LG	GINKGO BILOBA	GINKGO (MALE ONLY)	1	1		Y	1	
"	HILLVEW SCHOOL	114 + 75	58	RT	LG	GINKGO BILOBA	GINKGO (MALE ONLY)	1	1		Y	1	
"	HILLVEW SCHOOL	115 + 00	58	RT	LG	QUERCUS ALBA	WHITE OAK	1	1		Y	1	
"	HILLVEW SCHOOL	115 + 25	58	RT	LG	QUERCUS ALBA	WHITE OAK	1	1		Y	1	
"	HILLVEW SCHOOL	115 + 50	58	RT	LG	QUERCUS ALBA	WHITE OAK	1	1		Y	1	
"	HILLVEW SCHOOL	118 + 68	58	RT	LG	ZELKOVA SERRATA	JAPANESE ZELKOVA	1	1		Y	1	
"	HILLVEW SCHOOL	118 + 94	58	RT	LG	ZELKOVA SERRATA	JAPANESE ZELKOVA	1	1		Y	1	
"	HILLVEW SCHOOL	119 + 18.5	58	RT	LG	ZELKOVA SERRATA	JAPANESE ZELKOVA	1	1		Y	1	
"	HILLVEW SCHOOL	119 + 43.5	58	RT	LG	GLEDITSIA TRICANTHOS INERMIS	THORNLESS HONEYLOCUST	1	1		Y	1	
"	HILLVEW SCHOOL	120 + 01	58	RT	LG	GLEDITSIA TRICANTHOS INERMIS	THORNLESS HONEYLOCUST	1	1		Y	1	
"	HILLVEW SCHOOL	120 + 40	58	RT	LG	GLEDITSIA TRICANTHOS INERMIS	THORNLESS HONEYLOCUST	1	1		Y	1	
"	HILLVEW SCHOOL	122 + 46	55	RT	LG	GINKGO BILOBA	GINKGO (MALE ONLY)	1	1		Y	1	
"	HILLVEW SCHOOL	122 + 86.5	55	RT	LG	GINKGO BILOBA	GINKGO (MALE ONLY)	1	1		Y	1	
"	HILLVEW SCHOOL	123 + 27.5	55	RT	LG	GINKGO BILOBA	GINKGO (MALE ONLY)	1	1		Y	1	
6363	TOPS	124 +42	54	RT	LG	QUERCUS ALBA	WHITE OAK	1	1		Y	1	
6363	TOPS	125 + 02	54	RT	LG	QUERCUS ALBA	WHITE OAK	1	1		Y	1	
6363	TOPS	125 + 77	54	RT	LG	QUERCUS ALBA	WHITE OAK	1	1		Y	1	
6363	TOPS	126 + 35	54	RT	LG	QUERCUS ALBA	WHITE OAK	1	1		Y	1	
6363	TOPS	128 + 60	53	RT	LG	QUERCUS ROBUR	ENGLISH OAK	1	1		Y	1	
6363	TOPS	128 + 85	53	RT	LG	QUERCUS ROBUR	ENGLISH OAK	1	1		Y	1	
6363	TOPS	129 + 10	53	RT	LG	QUERCUS ROBUR	ENGLISH OAK	1	1		Y	1	
6363	TOPS	129 + 35	53	RT	LG	ZELKOVA SERRATA	JAPANESE ZELKOVA	1	1		Y	1	
6363	TOPS	129 + 60	53	RT	LG	ZELKOVA SERRATA	JAPANESE ZELKOVA	1	1		Y	1	
6347	HILLVIEW DENTAL	131 + 45	53	RT	WF	ACER GINNALA	AMUR MAPLE (TREE FORM)	1	1		Y	1	
6343	MEDICAL CENTER	132 + 30	46	RT	WF	ACER GINNALA	AMUR MAPLE (TREE FORM)	1	1		Y	1	
6339	TIM HORTON'S	132 + 86	57	RT	WF	CRATAEGUS X LAVALLEI	LAVALLE HAWTHORN	1	1		Y	1	
6339	TIM HORTON'S	133 + 11	57.5	RT	WF	CRATAEGUS X LAVALLEI	LAVALLE HAWTHORN	1	1		Y	1	
6337	TRANSIT HILL PLAZA	133 + 11	51	LT	WF	AMELANCHIER ARBOREA	DOWNY SERVICEBERRY	1	1		Y	1	
6337	TRANSIT HILL PLAZA	133 + 57	51	LT	WF	AMELANCHIER ARBOREA	DOWNY SERVICEBERRY	1	1		Y	1	
6337	BUFFALO VASCULAR	134 + 26	48	RT	WF	SYRINGA RETICULATA	JAPANESE TREE LILAC	1	1		Y	1	
RM 78 5302 1225	VACANT LOT	135 + 59	48	RT	LG	QUERCUS ROBUR	ENGLISH OAK	1	1		Y	1	
RM 78 5302 1225	VACANT LOT	135 + 91	48	RT	LG	QUERCUS ROBUR	ENGLISH OAK	1	1		Y	1	
6326	ERGUSON BATH & KITCHE	137 + 92	62	LT	LG	GLEDITSIA TRICANTHOS INERMIS	THORNLESS HONEYLOCUST	1	1		Y	1	
6260	O & C SURVEY	139 + 79	61	LT	WF	ZELKOVA SERRATA	JAPANESE ZELKOVA	1	1		Y	1	
6260	O & C SURVEY	140 + 19.5	61	LT	WF	ZELKOVA SERRATA	JAPANESE ZELKOVA	1	1		Y	1	
6260	O & C SURVEY	140 + 56	61	LT	WF	ZELKOVA SERRATA	JAPANESE ZELKOVA	1	1		Y	1	
								50	50			50	

ADDITIONAL PLANTING LOCATIONS CONTINUED ON THE NEXT SHEET, LAT-2

AFFIX SEAL: A. B. VILONEN
ON: 22-JUN-2021 14:39

ALTERED BY:
ON:

AS-BUILT REVISIONS
DESCRIPTION OF ALTERATIONS:

NY 78, TRANSIT ROAD, S.H. 1334A-1
FRENCH ROAD TO WEHRLE DRIVE
TOWNS OF CHEEKTOWAGA & LANCASTER
VILLAGE OF DEPEW
COUNTY: ERIE REGION: 05

PIN 5813.61
NY 78
UTILITY QUALITY LEVEL D

BRIDGES

CULVERTS

ALL DIMENSIONS IN ft UNLESS OTHERWISE NOTED

LANDSCAPE ARCHITECTURE TABLES

CONTRACT NUMBER
D264571

DRAWING NO. LAT-1
SHEET NO. 219

IT IS A VIOLATION OF LAW FOR ANY PERSON, UNLESS THEY ARE ACTING UNDER THE DIRECTION OF A LICENSED PROFESSIONAL ENGINEER, ARCHITECT, LANDSCAPE ARCHITECT, OR LAND SURVEYOR, TO ALTER AN ITEM IN ANY WAY. IF AN ITEM BEARING THE STAMP OF A LICENSED PROFESSIONAL IS ALTERED, THE ALTERING ENGINEER, ARCHITECT, LANDSCAPE ARCHITECT, OR LAND SURVEYOR SHALL STAMP THE DOCUMENT AND INCLUDE THE NOTATION "ALTERED BY" FOLLOWED BY THEIR SIGNATURE, THE DATE OF SUCH ALTERATION, AND A SPECIFIC DESCRIPTION OF THE ALTERATION.

NEW YORK STATE OF OPPORTUNITY. Department of Transportation

PROJECT MANAGER R. F. SCHALLER
CHECK A. B. VILONEN
DRAFTING P. J. PASNIK
CHECK A. B. VILONEN
DESIGN P. J. PASNIK
JOB MANAGER R. F. SCHALLER
DESIGN SUPERVISOR R. F. SCHALLER
FILE NAME = 581361_CPH_LND_ENV_TBL.dgn
DATE/TIME = 22-JUN-2021 14:39
USER = avilonen

PLANTING TABLE

LOCATION					PLANT LIST			PLANTING				ESTABLISHMENT	
ADDRESS TRANSIT / GENESEE	BUSINESS/RESIDENCE	STATION	OFF SET	SIDE	LARGE COLUMNAR OR WIRE FRIENDLY TREE	BOTANICAL NAME	COMMON NAME	ITEM 611.0151 PLANTING MAJOR DECIDUOUS TREES - 2" CALIPER	ITEM 611.19010024 POST PLANTING CARE W/ REPLACEMENT - MAJOR DECIDUOUS TREES	ITEM 611.13 TRANSPLANT TREE OVER 3" TO 6" DBH	STAKING REQUIRED UNDER 611 ITEM	ITEM 611.17 PORTABLE DRIP IRRIGATION SYSTEM	ITEM 610.19 WATERING VEGETATION
6232	PRIVATE RESIDENCE	143 + 01.5	47	LT	LG	GLEDITSIA TRICANTHOS INERMIS	THORNLESS HONEYLOCUST	1	1		Y	1	
6232	PRIVATE RESIDENCE	143 + 72	47	LT	LG	GLEDITSIA TRICANTHOS INERMIS	THORNLESS HONEYLOCUST	1	1		Y	1	
6210	PRIVATE RESIDENCE	145 + 26	46.5	LT	LG	QUERCUS ROBUR	ENGLISH OAK	1	1		Y	1	
6200	ZORBA'S	146 + 12	46.5	LT	WF	ACER GINNALA	AMUR MAPLE (TREE FORM)	1	1		Y	1	
6200	ZORBA'S	146 + 58	46.5	LT	WF	ACER GINNALA	AMUR MAPLE (TREE FORM)	1	1		Y	1	
6180	BRENNAN DENTAL	148 + 73	47.5	LT	WF	AMELANCHIER ARBOREA	DOWNY SERVICEBERRY	1	1		Y	1	
6164	GROOVE SALON	149 + 65	47.5	LT	WF	MALUS 'PRAIRIEFIRE'	CRABAPPLE (OR APPROVED EQUIVALENT)	1	1		Y	1	
6160	PJ COOLS ICE CREAM	150 + 80	47.5	LT	WF	ACER GINNALA	AMUR MAPLE (TREE FORM)	1	1		Y	1	
6140	BUFFALO BRACE	152 + 77	47.5	LT	LG	QUERCUS ROBUR	ENGLISH OAK	1	1		Y	1	
6140	BUFFALO BRACE	153 + 25	48	LT	LG	QUERCUS ROBUR	ENGLISH OAK	1	1		Y	1	
6140	BUFFALO BRACE	153 + 50	48	LT	LG	QUERCUS ROBUR	ENGLISH OAK	1	1		Y	1	
6140	BUFFALO BRACE	153 + 75	48	LT	LG	GLEDITSIA TRICANTHOS INERMIS	THORNLESS HONEYLOCUST	1	1		Y	1	
6140	BUFFALO BRACE	154 + 00	48	LT	LG	GLEDITSIA TRICANTHOS INERMIS	THORNLESS HONEYLOCUST	1	1		Y	1	
6135	HILLVIEW RESTAURANT	156 + 33	45	RT	WF	CRATAEGUS X LAVALLEI	LAVALLE HAWTHORN	1	1		Y	1	
6135	HILLVIEW RESTAURANT	157 + 93	44.5	RT	WF	CRATAEGUS X LAVALLEI	LAVALLE HAWTHORN	1	1		Y	1	
6120	PRIVATE RESIDENCE	156 + 48	35	LT	WF	SYRINGA RETICULATA	JAPANESE TREE LILAC	1	1		Y	1	WATERING VEGETATON ON LAT-02
6110	DON'S WELDING	157 + 27	49	LT	WF	SYRINGA RETICULATA	JAPANESE TREE LILAC	1	1		Y	1	
6084	PRIVATE RESIDENCE	159 + 75	46.5	LT	WF	MALUS 'PRAIRIEFIRE'	CRABAPPLE (OR APPROVED EQUIVALENT)	1	1		Y	1	
6075	BIRCH TREE APARTMENTS	160 + 55	35	LT	WF	ACER GINNALA	AMUR MAPLE (TREE FORM)	1	1		Y	1	
6075	BIRCH TREE APARTMENTS	161 + 00	34	LT	WF	ACER GINNALA	AMUR MAPLE (TREE FORM)	1	1		Y	1	
6150	AMIGONE FUNERAL HOME	163 + 11.5	31.5	LT	WF	SYRINGA RETICULATA	JAPANESE TREE LILAC	1	1		Y	1	
6150	AMIGONE FUNERAL HOME	163 + 48	31.5	LT	WF	SYRINGA RETICULATA	JAPANESE TREE LILAC	1	1		Y	1	
6020	ANIMAL HOSPITAL	166 +59.5	31	LT	LG	GLEDITSIA TRICANTHOS INERMIS	THORNLESS HONEYLOCUST	1	1		Y	1	
6020	ANIMAL HOSPITAL	167 + 27	30	LT	LG	GLEDITSIA TRICANTHOS INERMIS	THORNLESS HONEYLOCUST	1	1		Y	1	
6019	PRIVATE RESIDENCE	167+50	56.5	RT	WF	AMELANCHIER ARBOREA	DOWNY SERVICEBERRY	1	1		Y	1	
6000 TRANSIT	RITE AID	168 + 20	27.5	LT	WF	MALUS 'PRAIRIEFIRE'	CRABAPPLE (OR APPROVED EQUIVALENT)	1	1		Y	1	
6000 TRANSIT	RITE AID	168 + 75	27.5	LT	WF	MALUS 'PRAIRIEFIRE'	CRABAPPLE (OR APPROVED EQUIVALENT)	1	1		Y	1	
GENESEE		G 284+55	50	LT			LOCUST			1	y	1	
GENESEE		G 284+10	50	LT			LOCUST			1	y	1	
GENESEE		G 283+83	50	LT			LOCUST			1	y	1	
GENESEE		G 284+10	50	LT			LOCUST			1	y	1	
GENESEE		G 283+45	50	LT			LOCUST			1	y	1	
							TOTALS	27.0	27.0	5.0		32.0	
							TWO TABLE TOTAL	77.0	77.0			82.0	

1. ALL TREE PITS SHALL BE 3X THE SIZE OF THE BALL FOR ITEM 611.0151.
2. TYPE D MULCH SHALL BE USED ON ALL 611 ITEMS AND SHALL BE INCLUDED IN THE COST OF THE 611 ITEMS.

610.19 WATERING VEGETATION TABLE

CATEGORY	SUB CATEGORY	GAL PER APPLICATION	QUANTITY OR AREA OF PLANTS	# OF APPLICATIONS	TOTAL	MGAL
ITEM 611.0151	MAJOR DECIDUOUS	15.0	77.0	26.0	30,030.0	30.0
ITEM 611.13	TRANSPLANT TREES	15.0	5.0	26.0	1,950.0	2.0
ITEM 614.0411	CARE / FERTILIZED	15.0	6.0	26.0	2,340.0	2.3
					TOTAL	34

THREE TREES CARED FOR ON GENESEE ST. REQUIRE TWO DRIP IRRIGATION BAGS PER TREE.

AFFIX SEAL: A. B. VILONEN
ON: 22-JUN-2021 14:39

ALTERED BY:
ON:

AS-BUILT REVISIONS
DESCRIPTION OF ALTERATIONS:

NY 78, TRANSIT ROAD, S.H. 1334A-1
FRENCH ROAD TO WEHRLE DRIVE
TOWNS OF CHEEKTOWAGA & LANCASTER
VILLAGE OF DEPEW
COUNTY: ERIE REGION: 05

PIN 5813.61
NY 78
UTILITY QUALITY LEVEL D

BRIDGES

CULVERTS

ALL DIMENSIONS IN ft UNLESS OTHERWISE NOTED

LANDSCAPE ARCHITECTURE TABLES

CONTRACT NUMBER D264571

DRAWING NO. LAT-2
SHEET NO. 220

IT IS A VIOLATION OF LAW FOR ANY PERSON, UNLESS THEY ARE ACTING UNDER THE DIRECTION OF A LICENSED PROFESSIONAL ENGINEER, ARCHITECT, LANDSCAPE ARCHITECT, OR LAND SURVEYOR, TO ALTER AN ITEM IN ANY WAY. IF AN ITEM BEARING THE STAMP OF A LICENSED PROFESSIONAL IS ALTERED, THE ALTERING ENGINEER, ARCHITECT, LANDSCAPE ARCHITECT, OR LAND SURVEYOR SHALL STAMP THE DOCUMENT AND INCLUDE THE NOTATION "ALTERED BY" FOLLOWED BY THEIR SIGNATURE, THE DATE OF SUCH ALTERATION, AND A SPECIFIC DESCRIPTION OF THE ALTERATION.

NEW YORK STATE OF OPPORTUNITY. Department of Transportation

PROJECT MANAGER R. F. SCHALLER
CHECK A. B. VILONEN
DRAFTING P. J. PASNIK
CHECK A. B. VILONEN
DESIGN P. J. PASNIK
JOB MANAGER R. F. SCHALLER
DESIGN SUPERVISOR R. F. SCHALLER
FILE NAME = 581361_CPH_LND_ENV_TBL_II.dgn
DATE/TIME = 22-JUN-2021 14:39
USER = avilonen

TRANSIT ROAD AND GENESEE STREET CARE AND REMOVAL TABLE											
SIDE	STATION	OFFSET (FEET)	TREE	SIZE INCHES	CARE/FERTILIZE UP TO 12" DBH ITEM 614.0411	VERTICAL MULCHING ITEM 614.08 SQ YD	PORTABLE DRIP IRRIGATION SYSTEM ITEM 611.17	WATERING ITEM 610.19	TREE REMOVAL OVER 6" TO 12" ITEM 614.060204	TREE REMOVAL OVER 12" TO 18" ITEM 614.060304	TREE REMOVAL OVER 24" TO 36" ITEM 614.060504
RT	T 89+48	80	CRIMSON KING MAPLE	4	1	27		SEE WATERING VEGETATION TABLE ON LAT-2			
LT	T 89+55	65	LOCUST	4	1						
RT	T 89+79	80	CRIMSON KING MAPLE	5	1						
RT	T 90+08	80	CRIMSON KING MAPLE	4.5	1	27					
LT	90+10	72	LOCUST	8	1						
RT	90+35	70	CRIMSON KING MAPLE	5	1	27					
RT	90+64	70	CRIMSON KING MAPLE	3.25	1	27					
LT	90+10	72	LOCUST	8	1						
RT	90+93	80	CRIMSON KING MAPLE	3.5	1	27					
LT	93+54.5	78	CRIMSON KING MAPLE	8	1	27					
LT	93+94	76	CRIMSON KING MAPLE	8	1	27					
LT	96+15	65	APPLE	8					1		
LT	96+20	70	COTTONWOOD	30							1
LT	97+68	69	CRABAPPLE	8					1		
LT	97+72	72	CRABAPPLE	13						1	
LT	G 288+04	52	NORWAY MAPLE	12	1	17	X2				
LT	G 288+35	51.5	NORWAY MAPLE	14	1	22	X2				
LT	G 288+63	51.5	NORWAY MAPLE	10	1	22	X2				
	LANDSCAPE ESTIMATE ITEMS				14	250	6	0	2	1	1

1. CONTRACTOR SHALL ROOT PRUNE ANY GIRDLING ROOTS AT THE BASE OF THE TREE UNDER THE DIRECTION OF THE RLA.
2. TREE SHALL BE TRIMMED FOR THINNING OF STEMS AS DIRECTED BY THE RLA.
3. ALL TREES ON EAST GENESEE ST. SHALL BE TRIMMED FOR VISIBILITY OF SIGNAGE AND PEDESTRIAN CLEARANCE, UNLESS OTHERWISE DIRECTED.
4. REFER TO LAT-2 FOR INFORMATION AND WATERING QUANTITIES. (X2 - 2 DRIP IRRIGATION BAGS PER TREE).

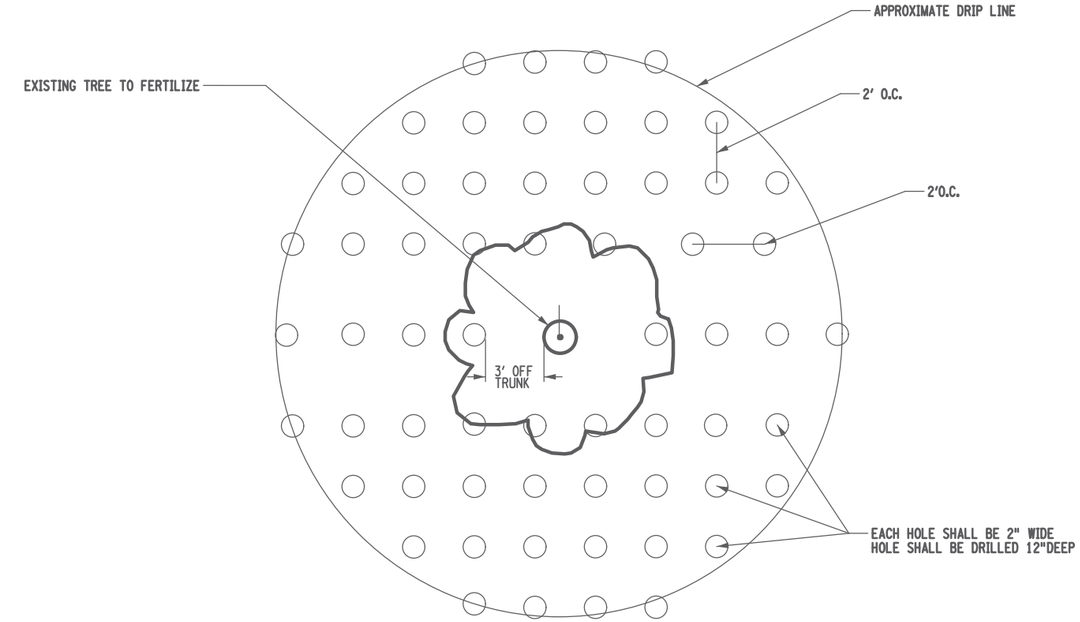

VERTICAL TREE MULCHING PATTERN (TRANSIT RD.)
(ITEM 614.08) NTS

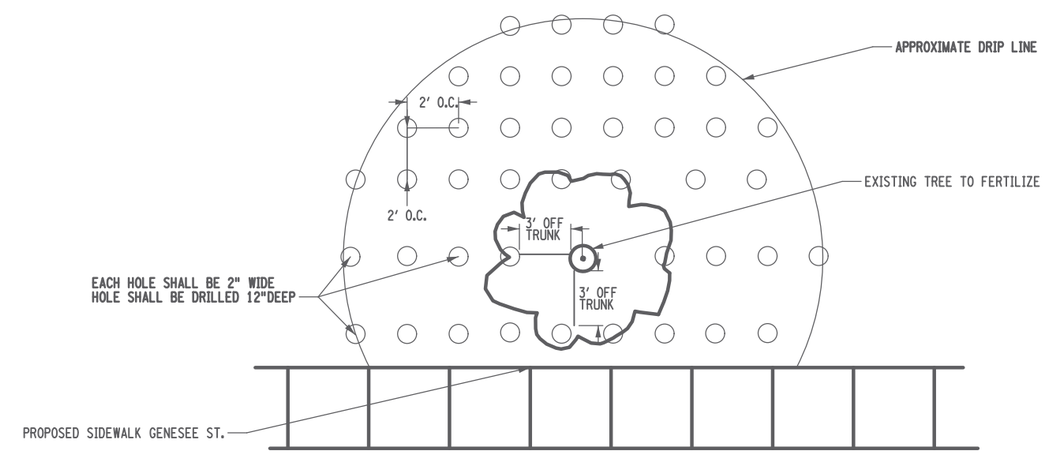

VERTICAL TREE MULCHING PATTERN (GENESEE ST)
(ITEM 614.08) NTS

ITEM 209.22 - STABILIZED CONSTRUCTION ENTRANCE (PROPOSED)		
SHEET	LOCATION	QTY (SY)
N/A	ADBE	50
	TOTAL	50 SY

ITEM 203.02 - UNCLASSIFIED EXCAVATION AND DISPOSAL		
SHEET	LOCATION	QTY (CY)
223	86+00 // ENTIRE POND FOREBAY	115
	TOTAL	115 CY

ITEM 209.13 - SILT FENCE - TEMPORARY		
SHEET	LOCATION	QTY (LF)
N/A	ADBE	300
	TOTAL	300 LF

ITEM 209.1003 - SEED AND MULCH-TEMPORARY			
LOCATION		SIDE	QUANTITY (SY)
ADBE	ADBE		240
		TOTAL	240 SY

ITEM 617.10000024 - DISPOSAL OF MATERIAL CONTAINING INVASIVE SPECIES		
SHEET	LOCATION	QTY (CY)
223	86+00 // ENTIRE POND FOREBAY	115
	TOTAL	115 CY

ITEM 209.1702 - DRAINAGE STRUCTURES INLET PROTECTION, GRAVEL BAG, TEMPORARY		
SIDE	LOCATION	QTY (CY)
LT	97+75	1
RT	97+75	1
LT	99+25	1
LT	100+25	1
RT	102+25	1
RT	104+00	1
LT	G 276+75	1
LT	G 278+50	1
LT	G 282+25	1
RT	G 282+75	1
RT	G 283+75	1
RT	G 285+25	1
RT	G 286+00	1
RT	G 286+50	1
RT	G 287+00	1
RT	G 287+50	1
RT	G 288+75	1
RT	G 290+80	1
	TOTAL	18 CY

ITEM 209.110603 - CHECK DAM (DITCH BOTTOM WIDTH >6' TO 10') STONE PERMANENT		
SHEET	LOCATION	QTY (CY)
N/A	ADBE	1
N/A	ADBE	1
	TOTAL	2 CY

AFFIX SEAL: A. B. VILONEN
ON: 22-JUN-2021 14:39

ALTERED BY:
ON:

REGISTERED LANDSCAPE ARCHITECT
ALISIA BROOK VILONEN
002321
STATE OF NEW YORK

AS-BUILT REVISIONS
DESCRIPTION OF ALTERATIONS:

NY 78, TRANSIT ROAD, S.H. 1334A-1
FRENCH ROAD TO WEHRLE DRIVE
TOWNS OF CHEEKTOWAGA & LANCASTER
VILLAGE OF DEPEW
COUNTY: ERIE REGION: 05

PIN 5813.61
NY 78
UTILITY QUALITY LEVEL D

BRIDGES

CULVERTS

ALL DIMENSIONS IN ft UNLESS OTHERWISE NOTED

LANDSCAPE ARCHITECTURE TABLES

CONTRACT NUMBER
D264571

DRAWING NO. LAT-3
SHEET NO. 221

IT IS A VIOLATION OF LAW FOR ANY PERSON, UNLESS THEY ARE ACTING UNDER THE DIRECTION OF A LICENSED PROFESSIONAL ENGINEER, ARCHITECT, LANDSCAPE ARCHITECT, OR LAND SURVEYOR, TO ALTER AN ITEM IN ANY WAY. IF AN ITEM BEARING THE STAMP OF A LICENSED PROFESSIONAL IS ALTERED, THE ALTERING ENGINEER, ARCHITECT, LANDSCAPE ARCHITECT, OR LAND SURVEYOR SHALL STAMP THE DOCUMENT AND INCLUDE THE NOTATION "ALTERED BY" FOLLOWED BY THEIR SIGNATURE, THE DATE OF SUCH ALTERATION, AND A SPECIFIC DESCRIPTION OF THE ALTERATION.

NEW YORK STATE OF OPPORTUNITY. Department of Transportation

PROJECT MANAGER R. F. SCHALLER
CHECK A. B. VILONEN
DRAFTING P. J. PASNIK
CHECK A. B. VILONEN
DESIGN P. J. PASNIK
JOB MANAGER R. F. SCHALLER
DESIGN SUPERVISOR R. F. SCHALLER
FILE NAME = 581361_CPH_LND_ENV_TBL_III.dgn
DATE/TIME = 22-JUN-2021 14:39
USER = avilonen

TABLE 1

610 GROUND VEGETATION TABLE										
ITEM 610.0501 - FERTILIZER(LB)								ITEM 610.21 MOWING		
FROM STATION	O/S	TO STATION	O/S	LENGTH (LF)	WIDTH (LF)	AREA (SF)	FERTILIZER Type A* (1lb Nitrogen/ 1000 SF) (LBS)	SY	# OF MOWS	TOTAL
TRANSIT ROAD - EAST SIDE										
67+28	49.9' LT	85+20	43.9' LT	1792.00	14.4	25876.48	25.88	2875.2	2	5750.3
85+20	43.9' LT	91+08	49.1' LT	588.00	15.5	9114.00	9.11	1012.7	2	2025.3
PASQUALE DRIVE - NORTHEAST				55.00	7.0	385.00	0.39	42.8	2	85.6
PASQUALE DRIVE - SOUTHEAST				62.00	7.0	434.00	0.43	48.2	2	96.4
92+03	48.9' LT	96+20	40.3' LT	417.00	14.2	5929.74	5.93	658.9	2	1317.7
97+67	39.4' LT	98+59	40.3' LT	92.00	2.8	253.00	0.25	28.1	2	56.2
100+97	42.4' LT	101+82	38.8' LT	85.00	1.0	85.00	0.09	9.4	2	18.9
101+97	39.1' LT	106+04	46.7' LT	407.00	1.0	407.00	0.41	45.2	2	90.4
106+49	46.8' LT	106+62	47.0' LT	13.00	1.0	13.00	0.01	1.4	2	2.9
106+96	46.3' LT	107+68	47.4' LT	72.00	1.0	72.00	0.07	8.0	2	16.0
108+03	47.3' LT	108+12	46.8' LT	9.00	1.0	9.00	0.01	1.0	2	2.0
109+81	46.3' LT	110+57	46.8' LT	76.00	1.0	76.00	0.08	8.4	2	16.9
111+04	46.8' LT	111+73	46.4' LT	69.00	1.0	69.00	0.07	7.7	2	15.3
112+35	46.4' LT	112+59	46.9' LT	24.00	1.0	24.00	0.02	2.7	2	5.3
113+67	46.9' LT	115+67	46.7' LT	200.00	1.0	200.00	0.20	22.2	2	44.4
116+21	46.7' LT	118+13	47.1' LT	192.00	1.0	192.00	0.19	21.3	2	42.7
118+40	46.9' LT	120+88	46.5' LT	248.00	1.0	248.00	0.25	27.6	2	55.1
121+11	46.6' LT	123+50	37.8' LT	239.00	1.0	239.00	0.24	26.6	2	53.1
129+65	47.5' LT	129+85	46.6' LT	20.00	1.0	20.00	0.02	2.2	2	4.4
130+00	46.4' LT	130+20	46.5' LT	20.00	1.0	20.00	0.02	2.2	2	4.4
130+33	46.4' LT	130+77	46.6' LT	44.00	1.0	44.00	0.04	4.9	2	9.8
130+89	46.4' LT	131+54	46.5' LT	65.00	1.0	65.00	0.07	7.2	2	14.4
131+74	46.5' LT	132+38	39.6' LT	64.00	1.0	64.00	0.06	7.1	2	14.2
132+60	39.5' LT	133+22	39.4' LT	62.00	1.0	62.00	0.06	6.9	2	13.8
133+62	39.5' LT	134+54	39.4' LT	92.00	1.0	92.00	0.09	10.2	2	20.4
134+97	39.4' LT	135+43	39.4' LT	46.00	1.0	46.00	0.05	5.1	2	10.2
135+53	39.4' LT	136+03	39.6' LT	50.00	1.0	50.00	0.05	5.6	2	11.1
136+79	41.0' LT	138+42	47.2' LT	163.00	1.0	163.00	0.16	18.1	2	36.2
138+71	47.2' LT	140+00	47.2' LT	129.00	1.0	129.00	0.13	14.3	2	28.7
140+37	47.6' LT	140+92	47.1' LT	55.00	1.0	55.00	0.06	6.1	2	12.2
141+22	47.4' LT	141+63	47.2' LT	41.00	1.0	41.00	0.04	4.6	2	9.1
141+84	47.4' LT	142+12	47.1' LT	28.00	1.0	28.00	0.03	3.1	2	6.2
145+32	47.2' LT	145+58	47.0' LT	26.00	1.0	26.00	0.03	2.9	2	5.8
145+93	47.4' LT	146+88	47.5' LT	95.00	1.0	95.00	0.10	10.6	2	21.1
147+23	47.3' LT	147+45	47.3' LT	22.00	1.0	22.00	0.02	2.4	2	4.9
147+62	47.2' LT	149+03	47.2' LT	141.00	1.0	141.00	0.14	15.7	2	31.3
TRANSIT ROAD - WEST SIDE										
67+24	65.3' RT	69+33	56.0' RT	209.00	8.2	1705.44	1.71	189.5	2	379.0
69+69	51.6' RT	74+65	62.6' RT	496.00	7.1	3496.80	3.50	388.5	2	777.1
75+01	55.7' RT	91+24	41.4' RT	1623.00	12.8	20741.94	20.74	2304.7	2	4609.3
91+63	56.0' RT	96+20	57.3' RT	457.00	7.4	3372.66	3.37	374.7	2	749.5
97+68	45.3' RT	98+87	54.0' RT	119.00	3.5	417.69	0.42	46.4	2	92.8
100+48	47.1' RT	105+72	46.7' RT	524.00	8.6	4490.68	4.49	499.0	2	997.9
104+44	46.8' RT	106+39	46.3' RT	195.00	1.0	195.00	0.20	21.7	2	43.3
105+72	46.3' RT	106+82	46.1' RT	110.00	1.0	110.00	0.11	12.2	2	24.4
110+44	46.4' RT	111+33	39.7' RT	89.00	1.0	89.00	0.09	9.9	2	19.8
113+26	39.2' RT	113+90	40.9' RT	64.00	1.0	64.00	0.06	7.1	2	14.2
114+18	41.2' RT	121+41	45.7' RT	723.00	1.0	723.00	0.72	80.3	2	160.7
121+56	45.7' RT	127+05	43.3' RT	549.00	1.0	549.00	0.55	61.0	2	122.0
TOTALS							80.74 N			17943.2

TABLE 2

610 GROUND VEGETATION TABLE										
ITEM 610.0501 - FERTILIZER(LB)								ITEM 610.21 MOWING		
FROM STATION	O/S	TO STATION	O/S	LENGTH (LF)	WIDTH (LF)	AREA (SF)	FERTILIZER Type A* (1lb Nitrogen/ 1000 SF) (LBS)	SY	# OF MOWS	TOTAL
128+14	42.1' RT	128+84	42.3' RT	70.00	1.0	70.00	0.07	7.8	2	15.6
130+47	44.5' RT	130+61	44.5' RT	14.00	1.0	14.00	0.01	1.6	2	3.1
130+93	45.0' RT	132+41	47.0' RT	148.00	1.0	148.00	0.15	16.4	2	32.9
132+83	45.8' RT	133+82	45.8' RT	99.00	1.0	99.00	0.10	11.0	2	22.0
137+51	45.9' RT	138+02	45.6' RT	51.00	1.0	51.00	0.05	5.7	2	11.3
139+61	45.6' RT	140+85	38.8' RT	124.00	1.0	124.00	0.12	13.8	2	27.6
142+24	38.5' RT	142+65	38.8' RT	41.00	1.0	41.00	0.04	4.6	2	9.1
142+80	38.7' RT	143+47	38.8' RT	67.00	1.0	67.00	0.07	7.4	2	14.9
145+22	39.0' RT	145+32	38.7' RT	10.00	1.0	10.00	0.01	1.1	2	2.2
145+93	39.1' RT	146+22	38.6' RT	29.00	1.0	29.00	0.03	3.2	2	6.4
146+47	39.0' RT	146+77	38.9' RT	30.00	1.0	30.00	0.03	3.3	2	6.7
145+93	39.1' RT	146+22	38.6' RT	29.00	1.0	29.00	0.03	3.2	2	6.4
146+47	39.0' RT	146+77	38.9' RT	30.00	1.0	30.00	0.03	3.3	2	6.7
LEE STREET - SOUTHWEST				22.00	1.0	22.00	0.02	2.4	2	4.9
148+53	39.2' RT	148+74	39.2' RT	21.00	1.0	21.00	0.02	2.3	2	4.7
150+12	39.3' RT	150+57	39.3' RT	45.00	1.0	45.00	0.05	5.0	2	10.0
152+37	37.3' RT	154+34	40.6' RT	197.00	1.0	197.00	0.20	21.9	2	43.8
154+89	40.8' RT	156+93	39.1' RT	204.00	1.0	204.00	0.20	22.7	2	45.3
157+11	39.4' RT	157+64	39.1' RT	53.00	1.0	53.00	0.05	5.9	2	11.8
159+56	38.7' RT	160+10	44.1' RT	54.00	1.0	54.00	0.05	6.0	2	12.0
160+31	44.4' RT	161+26	43.9' RT	95.00	1.0	95.00	0.10	10.6	2	21.1
161+48	44.0' RT	162+66	43.6' RT	118.00	1.0	118.00	0.12	13.1	2	26.2
162+87	43.6' RT	163+77	43.2' RT	90.00	1.0	90.00	0.09	10.0	2	20.0
164+04	43.4' RT	164+86	42.8' RT	82.00	1.0	82.00	0.08	9.1	2	18.2
165+10	42.8' RT	166+19	41.2' RT	109.00	1.0	109.00	0.11	12.1	2	24.2
GENESEE STREET										
G 276+52	45.6' RT	G 281+85	50.3' RT	533.00	6.3	**3331.25**	3.33	370.1	2	740.3
G 281+10	41.7' LT	G 284+57	55.0' LT	347.00	5.3	**1849.51**	1.85	205.5	2	411.0
G 286+13	45.4' LT	G 288+91	45.1' LT	278.00	7.6	**2110.02**	2.11	234.4	2	468.9
G 289+21	43.7' LT	G 289+96	40.7' LT	6.27	7.3	**45.77**	0.05	5.1	2	10.2
CLOVERLEAF DRIVE										
C 0+42	21.0' RT	C 1+66	21.2' RT	124.00	1.0	**124.00**	0.12	13.8	2	27.6
PLEASANT VIEW DRIVE										
PV 0+44	32.3' LT	PV 0+85	29.7' LT	41.00	1.0	**41.00**	0.04	4.6	2	9.1
PV 0+61	31.3' RT	PV 2+36	31.5' RT	175.00	1.0	**175.00**	0.18	19.4	2	38.9
REHM ROAD (EAST)										
RE 0+54	16.4' LT	RE 1+02	12.0' LT	48.00	1.0	**48.00**	0.05	5.3	2	10.7
RE 0+56	14.5' RT	RE 0+67	12.6' RT	11.00	1.0	**11.00**	0.01	1.2	2	2.4
						6107.5				
TRANSIT EAST SIDE & WEST SIDE (TABLE 1) SUBTOTAL:							**80.74 N**			**17,943.21**
TRANSIT WEST SIDE & SIDE STREETS (TABLE 2) SUBTOTAL:							**9.57 N**			**2,126.12**
TOTAL:							**90.31 N**			**20,069.33**

TABLE 3

610 GROUND VEGETATION TABLE								
ITEM 610.0501 - FERTILIZER(LB)						ITEM 610.21 MOWING LAWNS		
FROM STATION	O/S	TO STATION	O/S	AREA (SF)	FERTILIZER Type A* (1lb Nitrogen/ 1000 SF) (LBS)	SY	# OF MOWS	TOTAL
TRANSIT ROAD - EAST SIDE								
102+01.0	36.5 LT	105+98.5	30.4 LT	2019.5	2.02	224.4	2	448.8
109+80.8	30.7 LT	110+06.7	30.6 LT	77.7	0.08	8.6	2	17.3
110+34.7	30.6 LT	110+57.1	30.6 LT	59.8	0.06	6.6	2	13.3
111+02.3	30.7 LT	111+75.4	30.7 LT	194.4	0.19	21.6	2	43.2
112+34.5	30.6 LT	112+83.0	41.1 LT	122.1	0.12	13.6	2	27.1
113+53.0	38.4 LT	115+60.6	33.1 LT	536.8	0.54	59.6	2	119.3
116+33.8	33.7 LT	118+09.0	33.6 LT	475.1	0.48	52.8	2	105.6
118+53.7	34.2 LT	120+81.7	32.9 LT	631.6	0.63	70.2	2	140.4
121+17.7	33.2 LT	123+50.9	30.2 LT	594.5	0.59	66.1	2	132.1
130+36.2	37.3 LT	130+72.8	31.9 LT	82.9	0.08	9.2	2	18.4
130+95.4	30.3 LT	131+53.5	30.5 LT	162.9	0.16	18.1	2	36.2
131+78.0	30.6 LT	132+32.4	30.8 LT	148.2	0.15	16.5	2	32.9
132+66.8	30.9 LT	133+19.2	31.1 LT	140.7	0.14	15.6	2	31.3
133+64.2	31.2 LT	134+49.5	31.5 LT	223.9	0.22	24.9	2	49.8
135+00.4	31.6 LT	135+35.8	31.9 LT	99.0	0.10	11.0	2	22.0
135+57.5	34.6 LT	136+16.4	43.7 LT	156.2	0.16	17.4	2	34.7
136+27.7	38.8 LT	138+38.8	32.02 LT	812.3	0.81	90.3	2	180.5
138+78.4	32.0 LT	140+01.4	31.9 LT	562.9	0.56	62.5	2	125.1
140+47.1	31.8 LT	140+90.9	31.8 LT	197.2	0.20	21.9	2	43.8
141+28.4	31.8 LT	141+61.1	31.8 LT	152.8	0.15	17.0	2	34.0
145+95.2	31.6 LT	146+80.8	31.5 LT	420.2	0.42	46.7	2	93.4
147+66.1	31.5 LT	149+00.3	35.9 LT	648.0	0.65	72.0	2	144.0
TRANSIT ROAD - WEST SIDE								
108+07.5	35.2 RT	110+32.7	34.4 RT	1483.2	1.48	164.8	2	329.6
114+18.4	30.4 RT	121+36.5	30.5 RT	2933.6	2.93	326.0	2	651.9
121+63.6	30.6 RT	126+05.7	30.8 RT	1792.2	1.79	199.1	2	398.3
126+10.7	30.8 RT	127+03.9	39.6 RT	440.2	0.44	48.9	2	97.8
128+16.6	35.2 RT	128+82.8	35.3 RT	295.8	0.30	32.9	2	65.7
130+96.3	35.2 RT	132+33.9	36.2 RT	624.3	0.62	69.4	2	138.7
132+91.8	35.6 RT	133+81.2	34.5 RT	410.0	0.41	45.6	2	91.1
137+51.8	33.2 RT	138+01.4	29.0 RT	206.9	0.21	23.0	2	46.0
139+60.5	29.0 RT	140+85.7	29.1 RT	526.5	0.53	58.5	2	117.0
142+23.6	29.2 RT	142+62.1	34.2 RT	196.7	0.20	21.9	2	43.7
142+86.2	32.9 RT	143+44.0	33.7 RT	221.3	0.22	24.6	2	49.2
148+51.4	33.2 RT	148+74.0	29.8 RT	105.9	0.11	11.8	2	23.5
150+11.7	29.8 RT	150+75.6	42.3 RT	325.5	0.33	36.2	2	72.3
152+36.6	29.7 RT	154+31.7	29.8 RT	987.0	0.99	109.7	2	219.3
154+92.6	34.0 RT	156+79.1	28.9 RT	784.3	0.78	87.1	2	174.3
157+28.8	28.8 RT	157+63.0	33.5 RT	239.4	0.24	26.6	2	53.2
159+56.4	27.7 RT	160+05.6	32.5 RT	238.6	0.24	26.5	2	53.0
TRANSIT ROAD - EAST SIDE- MID BLOCK CROSSING REMOVALS								
151+24.0	35.4' LT	151+41.4	35.4' LT	136.5	0.14	15.2	2	30.3
TRANSIT ROAD - WEST SIDE - MIDBLOCK CROSSING REMOVALS								
160+79.1	34.4' RT	160+83.1	34.4' RT	57.9	0.06	6.4	2	12.9
166+90.9	31.5' RT	166+95.9	31.5' RT	68.9	0.07	7.7	2	15.3
TABLE 3 TOTAL:					**21.0 N**			**4,577.0**
TABLE 1 AND TABLE 2 TOTAL					**90.0 N**			**20,069**
					110.0 N			
COMBINED TOTAL					**550 lbs**			**24,646**

TYPE A FERTILIZER 2-1-1 SHALL BE APPROXIMATE ANALYSIS AS PER 713-03 FERTILIZER IN LANDSCAPE DEVELOPMENT SPECS. ASSUME 50 LB BAG.

AFFIX SEAL: A. B. VILONEN
ON: 22-JUN-2021 14:40

ALTERED BY:
ON:

AS-BUILT REVISIONS
DESCRIPTION OF ALTERATIONS:

NY 78, TRANSIT ROAD, S.H. 1334A-1
FRENCH ROAD TO WEHRLE DRIVE
TOWNS OF CHEEKTOWAGA & LANCASTER
VILLAGE OF DEPEW
COUNTY: ERIE REGION: 05

PIN 5813.61
NY 78
UTILITY QUALITY LEVEL D

BRIDGES

CULVERTS

ALL DIMENSIONS IN ft UNLESS OTHERWISE NOTED

LANDSCAPE ARCHITECTURE TABLES

CONTRACT NUMBER D264571

DRAWING NO. LAT-4
SHEET NO. 222

IT IS A VIOLATION OF LAW FOR ANY PERSON, UNLESS THEY ARE ACTING UNDER THE DIRECTION OF A LICENSED PROFESSIONAL ENGINEER, ARCHITECT, LANDSCAPE ARCHITECT, OR LAND SURVEYOR, TO ALTER AN ITEM IN ANY WAY. IF AN ITEM BEARING THE STAMP OF A LICENSED PROFESSIONAL IS ALTERED, THE ALTERING ENGINEER, ARCHITECT, LANDSCAPE ARCHITECT, OR LAND SURVEYOR SHALL STAMP THE DOCUMENT AND INCLUDE THE NOTATION "ALTERED BY" FOLLOWED BY THEIR SIGNATURE, THE DATE OF SUCH ALTERATION, AND A SPECIFIC DESCRIPTION OF THE ALTERATION.

NEW YORK STATE OF OPPORTUNITY. Department of Transportation

PROJECT MANAGER R. F. SCHALLER
CHECK A. B. VILONEN
DRAFTING P. J. PASNIK
CHECK A. B. VILONEN
DESIGN C. L. CRITES
JOB MANAGER R. F. SCHALLER
DESIGN SUPERVISOR R. F. SCHALLER
FILE NAME = 581361_CPH_LND_ENV_TBL_IV.dgn
DATE/TIME = 22-JUN-2021 14:40
USER = avilonen

GENERAL NOTES - STORMWATER POND DREDGING / EXCAVATION

1. THE INTENT OF THIS WORK IS TO INCREASE THE STORAGE CAPACITY OF THE POND FOREBAY IN ORDER TO SATISFY STORMWATER TREATMENT REQUIREMENTS UNDER STATE POLLUTANT DISCHARGE ELIMINATION SYSTEM (SPDES) PERMIT GP-0-20-001.

2. THE CONTRACTOR SHALL EXCAVATE AND REMOVE APPROXIMATELY 1-FOOT OF SEDIMENT/VEGATATION FROM THE BOTTOM OF THE POND FOREBAY. LOWERING THE POND BOTTOM ELEVATION WILL INCREASE STORAGE CAPACITY OF THE POND DURING STORM EVENTS.

3. EXCAVATION OF MATERIALS FROM THE POND SHALL BE COVERED UNDER ITEM 203.02 - UNCLASSIFIED EXCAVATION AND DISPOSAL.

4. ALL MATERIALS EXCAVATED FROM THE POND SHALL BE DISPOSED OF UNDER ITEM 617.10000024 - DISPOSAL OF MATERIAL CONTAINING INVASIVE PLANT SPECIES.

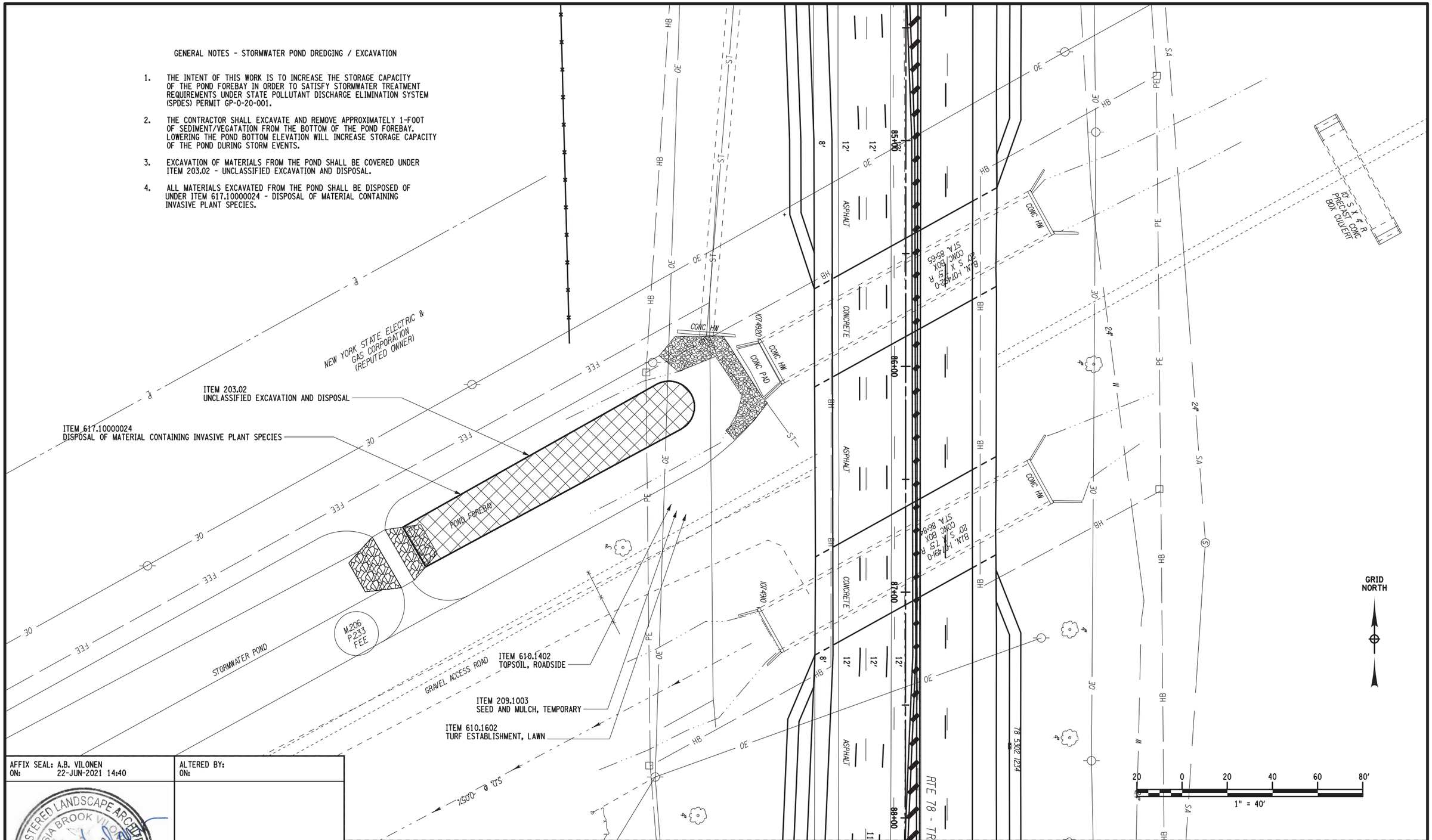

AFFIX SEAL: A.B. VILONEN
ON: 22-JUN-2021 14:40

ALTERED BY:
ON:

REGISTERED LANDSCAPE ARCHITECT
ALISIA BROOK VILONEN
002321
STATE OF NEW YORK

AS-BUILT REVISIONS
DESCRIPTION OF ALTERATIONS:

NY 78, TRANSIT ROAD, S.H. 1334A-1
FRENCH ROAD TO WEHRLE DRIVE
TOWNS OF CHEEKTOWAGA & LANCASTER
VILLAGE OF DEPEW
COUNTY: ERIE REGION: 05

PIN 5813.61
NY 78
UTILITY QUALITY LEVEL D

BRIDGES

CULVERTS

ALL DIMENSIONS IN ft UNLESS OTHERWISE NOTED

STORMWATER POND PLAN

CONTRACT NUMBER
D264571

DRAWING NO. SWP-01
SHEET NO. 223

IT IS A VIOLATION OF LAW FOR ANY PERSON, UNLESS THEY ARE ACTING UNDER THE DIRECTION OF A LICENSED PROFESSIONAL ENGINEER, ARCHITECT, LANDSCAPE ARCHITECT, OR LAND SURVEYOR, TO ALTER AN ITEM IN ANY WAY. IF AN ITEM BEARING THE STAMP OF A LICENSED PROFESSIONAL IS ALTERED, THE ALTERING ENGINEER, ARCHITECT, LANDSCAPE ARCHITECT, OR LAND SURVEYOR SHALL STAMP THE DOCUMENT AND INCLUDE THE NOTATION "ALTERED BY" FOLLOWED BY THEIR SIGNATURE, THE DATE OF SUCH ALTERATION, AND A SPECIFIC DESCRIPTION OF THE ALTERATION.

NEW YORK STATE OF OPPORTUNITY. Department of Transportation

DESIGN SUPERVISOR S. S. VAIDYA | JOB MANAGER R. F. SCHALLER | DESIGN C. L. CRITES | CHECK R. F. SCHALLER | DRAFTING C. L. CRITES | CHECK R. F. SCHALLER | PROJECT MANAGER S. S. VAIDYA

FILE NAME = 581361_cph_Ind_ESC_SWP.dgn
DATE/TIME = 22-JUN-2021 14:40
USER = avilonen

CURB RAMP NOTES

1. DEPENDING ON SITE CONDITIONS, EXISTING CURBS MAY REQUIRE PARTIAL OR TOTAL REMOVAL, OR CUTTING TO INSTALL NEW CURB RAMPS IN PROPER ORIENTATION. EXISTING CURB MAY ALSO REQUIRE REPLACEMENT IF AN ADA COMPLIANT CURB RAMP COULD NOT OTHERWISE BE CONSTRUCTED. REFER TO CURB RAMP TABLE FOR LOCATIONS WHERE REPLACEMENT OF CURB IS ANTICIPATED, OR ADBE.
2. CURB RAMP DETECTABLE WARNING SURFACES SHALL BE CAST IRON.
3. RAMP TYPE NUMBERING CORRELATES TO THE STANDARD SHEET RAMP NUMBERS ON STANDARD SHEETS 608-01. SOME RAMPS IN THIS PROJECT ARE MODIFICATIONS OF THE RAMPS SHOWN ON THE STANDARD SHEETS. MODIFIED RAMPS INCLUDE A LETTER AFTER THE NUMBER.
4. DAMAGE BEYOND SAW CUT LIMITS SHALL BE REPLACED TO THE NEXT JOINT OR SCORE LINE. ANY SUCH DAMAGE SHALL BE REPAIRED BY CONTRACTOR AT NO COST TO THE STATE.
5. THE TRANSITION FROM 6 INCH CURB TO FLUSH CURB SHALL BE A SMOOTH AND CONSISTENT TRANSITION.
6. AT VERY LARGE RADIUS INTERSECTIONS, THERE MAY BE LOCATIONS WHERE A SINGLE DETECTABLE WARNING UNIT CANNOT BE PROPERLY INSTALLED AT BE LOCATED FIVE (5) FEET (MAXIMUM) FROM THE BACK EDGE OF THE EXISTING OR PROPOSED FLUSH CURB. IN THESE SITUATIONS, STACKING TWO (2) DETECTABLE WARNING UNITS WILL BE REQUIRED. SEE DETAIL "STACKED DETECTABLE WARNING UNIT DETAIL.

CONTRACTOR RESPONSIBILITY FOR ADA COMPLIANCE

IF THE FINAL PRODUCT FAILS TO MEET ADA GUIDELINES AND CANNOT BE JUSTIFIED AS NONSTANDARD, AS DETERMINED BY THE ENGINEER IN CONSULTATION WITH THE REGIONAL LANDSCAPE ARCHITECT, THE FINAL PRODUCT SHALL BE REPLACED AT NO ADDITIONAL COST TO THE STATE.

CURB RAMP NOTES, GENERAL

1. ALL CURB RAMPS ARE TO BE LAID OUT COMPLETELY BY THE CONTRACTOR AND APPROVED BY THE ENGINEER. PAYMENT FOR LAYOUT OF CURB RAMPS IS TO BE INCLUDED IN PRICE BID FOR ITEM 608.0101.
2. IT IS STRONGLY RECOMMENDED THAT THE CONTRACTOR USE A DIGITAL LEVEL ON ALL FORMS PRIOR TO PLACING CONCRETE IN ORDER TO BUILD NEW SIDEWALKS AND CURB RAMPS WITH CORRECT RUNNING SLOPE AND CROSS SLOPE. REFER TO NYSDOT STANDARD SHEET SRIES 608-01 FOR CORRECT SLOPES AND TOLDERANCES.
3. ALL PROPOSED WORK IS TO BE CONFINED WITHIN THE HIGHWWAY BOUNDARY AS SHOWN ON THE PLANS.

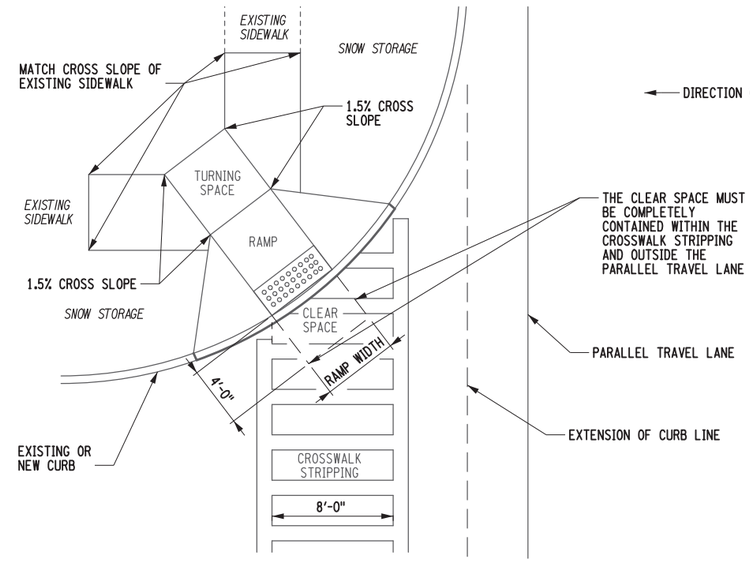

ORIENTATION OF CURB RAMP AND CROSSWALK
TYPE 8 RAMP CROSSING ONE LEG OF INTERSECTION
NOT TO SCALE

1. THE CLEAR SPACE AT THE BOTTOM OF ALL CURB RAMPS MUST BE COMPLETELY CONTAINED WITHIN THE CROSSWALKS. DEPENDING ON LOCATION, THE NEW CURB RAMP MAY NOT BE INSTALLED WHERE THE EXISTING CURB RAMP EXISTS. THIS MAY RESULT IN EXISTING CROSSWALK STRIPING THAT DOES NOT ALIGN WITH THE NEW CURB RAMPS RESULTING IN THE CLEAR SPACE NOT FULLY CONTAINED WITHIN THE CROSSWALK MARKINGS.
2. REFER TO MST-1, PMP-1 TO PMP-10 DRAWINGS FOR LOCATIONS AND PMT-1 TO PMT-4 FOR QUANTITY ESTIMATES FOR WORK AT CROSSWALK AND STOP BAR STRIPING.

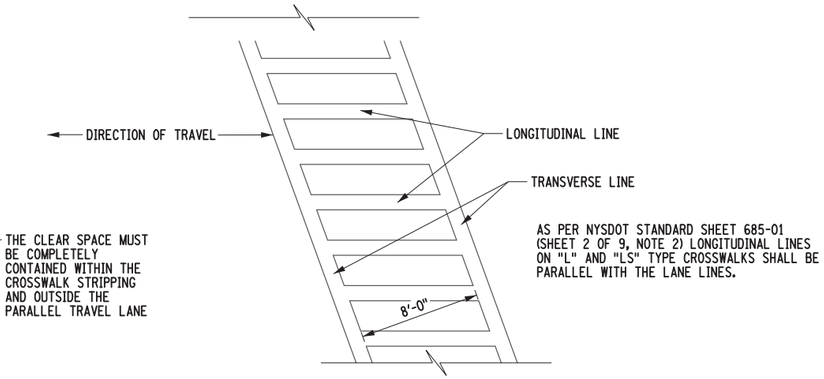

"LS" PAVEMENT MARKINGS AT SKEWED CROSSWALK

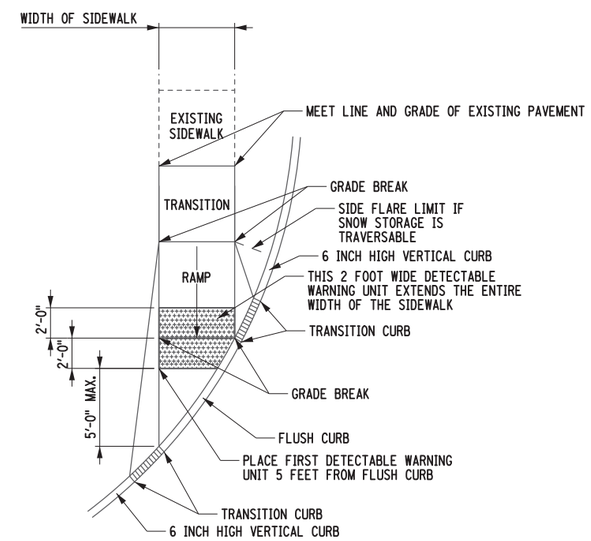

STACKED DETECTABLE WARNING UNIT DETAIL
NOT TO SCALE

1. AT VERY LARGE RADIUS INTERSECTIONS, THERE MAY BE LOCATIONS WHERE A SINGLE DETECTABLE WARNING SURFACE (DWS) CANNOT BE PROPERLY INSTALLED TO FULLY MEET THE REQUIREMENTS OF AN OPTION 2 DWS CONFIGURATION (SEE STANDARD SHEET 608-01, SHEET 2, OPTION 2). IN THESE SITUATIONS, STACKING TWO (2) DETECTABLE WARNING UNITS WILL BE REQUIRED.
2. IF STACKING TWO DWS'S TOGETHER, THE CORNER OF THE FIRST DETECTABLE WARNING SURFACE SHALL BE PLACED A MAXIMUM OF 5 FEET FROM THE FURTHEST CURB OPENING. THE SECOND DWS SHALL BE PLACED DIRECTLY BEHIND THE FIRST DWS, AND MUST EXTEND ACROSS THE ENTIRE SIDEWALK AT A 2 FOOT DEPTH.
3. NO MORE THAN TWO DETECTABLE WARNING SURFACES SHALL BE STACKED AT ANY ONE CURB RAMP. THEREFORE, IF NECESSARY A DIFFERENT DWS OR RAMP CONFIGURATIONS SHOULD BE CONSIDERED, ADBE.

AFFIX SEAL: A. B. VILONEN
ON: 22-JUN-2021 14:40

ALTERED BY:
ON:

AS-BUILT REVISIONS
DESCRIPTION OF ALTERATIONS:

NY 78, TRANSIT ROAD, S.H. 1334A-1
FRENCH ROAD TO WEHRLE DRIVE
TOWNS OF CHEEKTOWAGA & LANCASTER
VILLAGE OF DEPEW
COUNTY: ERIE REGION: 05

PIN 5813.61
NY 78
UTILITY QUALITY LEVEL D

BRIDGES

CULVERTS

ALL DIMENSIONS IN ft UNLESS OTHERWISE NOTED

CURB RAMP NOTES

CONTRACT NUMBER
D264571

DRAWING NO. CRN-1
SHEET NO. 224

IT IS A VIOLATION OF LAW FOR ANY PERSON, UNLESS THEY ARE ACTING UNDER THE DIRECTION OF A LICENSED PROFESSIONAL ENGINEER, ARCHITECT, LANDSCAPE ARCHITECT, OR LAND SURVEYOR, TO ALTER AN ITEM IN ANY WAY. IF AN ITEM BEARING THE STAMP OF A LICENSED PROFESSIONAL IS ALTERED, THE ALTERING ENGINEER, ARCHITECT, LANDSCAPE ARCHITECT, OR LAND SURVEYOR SHALL STAMP THE DOCUMENT AND INCLUDE THE NOTATION "ALTERED BY" FOLLOWED BY THEIR SIGNATURE, THE DATE OF SUCH ALTERATION, AND A SPECIFIC DESCRIPTION OF THE ALTERATION.

NEW YORK STATE OF OPPORTUNITY. Department of Transportation

DESIGN SUPERVISOR R. F. SCHALLER
JOB MANAGER R. F. SCHALLER
DESIGN P. J. PASNIK
CHECK A. B. VILONEN
DRAFTING P. J. PASNIK
CHECK A. B. VILONEN
PROJECT MANAGER R. F. SCHALLER
FILE NAME = 581361.cph_ind_crb_rmp_not.dgn
DATE/TIME = 22-JUN-2021 14:40
USER = avilonen

CURB RAMP TABLE - TRANSIT ROAD

LOCATION ID#	RAMP LOCATION - CROSS STREEET AND RAMP QUADRANT	NORTHING COORDINATE	WESTING COORDINATE	CURB RAMP AND TRANSITION: REPLACE, MODIFY, OR NEW	RAMP TYPE (SEE NOTE 1)	RAMP SIDE CONFIGURATION TYPE (FLARE) - SEE NOTE 3 BELOW	ITEM 203.02 (CY)	ITEM 304.15010005 (CY)	ITEM 608.0101 (CY)	CURB MODIFICATION: REPLACE OR RESET(SEE NOTE 4)	ITEM 609.0401 CURBING (LF)	ITEM 609.0405 (LF)	DETECTABLE WARNING: WIDTH (FT)	ORIENTATION OPTION (SEE NOTE 3)	ITEM 608.21000003 (SY)	UTILITY CONFLICTS (LIST UTILITY)	SIGNAL WORK (Y/N)	COMMENTS
R-01	NE CORNER OF TRANSIT RD. AND WEHRLE DR. CURB RAMP 1 (X-ING WEHRLE)	42°57'55.42"	78°41'47.85"	REPLACE	1	OPTION A	6	4.0	2	REPLACE		15	5	1	1.1		Y	
R-02	SW CORNER OF TRANSIT RD. AND WEHRLE DR. CURB RAMP 1 (X-ING WEHRLE)	42°57'54.64"	78°41'49.83"	REPLACE	MOD 10	OPTION A	6	4.0	2	REPLACE		15	5	1	1.1		Y	
R-03	SE CORNER OF TRANSIT RD. AND FREEMAN DR.	42°57'07.92"	78°41'47.98"	REPLACE	3	OPTION A	6	4.0	2	REPLACE		20	5	1	1.1		Y	
R-04	NE CORNER OF TRANSIT RD. AND MAPLE DR.	42°56'57.79"	78°41'48.31"	REPLACE	MOD 5	OPTION A	3	2.0	1	REPLACE		16	5	1	1.1		Y	
R-05	NE CORNER OF TRANSIT RD. AND SALVATORES DR. CURB RAMP 1 (X-ING TRANSIT)	42°56'49.84"	78°41'48.45"	REPLACE	MOD 5	OPTION A	8	5.0	3	REPLACE		15	5	1	1.1		Y	
R-06	NE CORNER OF TRANSIT RD. AND SALVATORES DR. CURB RAMP 2 (X-ING SALVATORS)	42°56'49.55"	78°41'48.36"	REPLACE	MOD 5	OPTION A	6	4.0	2	REPLACE		15	5	1	1.1		Y	
R-07	TRANSIT RD. AND TO I-90 RAMP ILAND (X-ING TRANSIT)	42°56'49.80"	78°41'49.62"	REPLACE	MOD 12	OPTION A	2	1.0	1	REPLACE		5	5	1	1.1		Y	
R-08	SW CORNER OF TRANSIT RD. AND FROM I-90 CURB RAMP 1 (X-ING RAMP)	42°56'48.64"	78°41'49.98"	REPLACE	MOD 7	OPTION A	7	4.0	3	REPLACE			5	1	1.1		Y	
R-09	SW CORNER OF TRANSIT RD. AND FROM I-90 CURB RAMP 2 (X-ING TRANSIT)	42°56'48.56"	78°41'49.88"	REPLACE	MOD 7	OPTION A				REPLACE			5	1	1.1		Y	
R-10	NE CORNER OF TRANSIT RD. AND GENESEE ST. CURB RAMP 1 (X-ING TRANSIT)	42°56'17.39"	78°41'48.49"	REPLACE	MOD 7	OPTION A	3	2.0	1	REPLACE	18		5	1	1.1	WATER VALVE	Y	
R-11	NE CORNER OF TRANSIT RD. AND GENESEE ST. CURB RAMP 2 (X-ING GENESEE)	42°56'17.23"	78°41'48.13"	REPLACE	MOD 7	OPTION A	3	2.0	1	REPLACE	18		5	1	1.1		Y	
R-12	NW CORNER OF TRANSIT RD. AND GENESEE ST. CURB RAMP 1 (X-ING TRANSIT)	42°56'17.06"	78°41'49.61"	REPLACE	MOD 7	OPTION A	7	4.0	3	REPLACE	17		5	1	1.1		Y	
R-13	NW CORNER OF TRANSIT RD. AND GENESEE ST. CURB RAMP 2 (X-ING GENESEE)	42°56'16.76"	78°41'49.84"	REPLACE	MOD 7	OPTION A	7	4.0	3	REPLACE	15		5	1	1.1		Y	
R-14	SE CORNER OF TRANSIT RD. AND GENESEE ST. CURB RAMP 1 (X-ING GENESEE)	42°56'16.53"	78°41'48.02"	REPLACE	MOD 5	OPTION A	3	2.0	1	REPLACE	15		5	1	1.1		Y	
R-15	SE CORNER OF TRANSIT RD. AND GENESEE ST. CURB RAMP 2 (X-ING TRANSIT)	42°56'16.20"	78°41'48.51"	REPLACE	MOD 5	OPTION A	5	3.0	2	REPLACE	15		5	1	1.1		Y	
R-16	SW CORNER OF TRANSIT RD. AND GENESEE ST.	42°56'15.89"	78°41'49.75"	REPLACE	MOD 7	OPTION A	7	4.0	3	REPLACE	16		5	1	1.1	WATER VALVE	Y	
R-17	NW CORNER OF TRANSIT RD. AND CLOVERLEAF DR.	42°56'03.68"	78°41'49.47"	NEW	1	OPTION A	7	4.0	3	REPLACE	16		5	1	1.1		Y	
R-18	SW CORNER OF TRANSIT RD. AND CLOVERLEAF DR. CURB RAMP 1 (X-ING CLOVERLEAF)	42°56'03.27"	78°41'49.51"	REPLACE	1	OPTION A	3	2.0	1	REPLACE	20		5	1	1.1		Y	
R-19	SW CORNER OF TRANSIT RD. AND CLOVERLEAF DR. CURB RAMP 2 (X-ING TRANSIT)	42°56'03.19"	78°41'49.42"	REPLACE	MOD 5	OPTION A				REPLACE	20		5	1	1.1		Y	
R-20	NE CORNER OF TRANSIT RD. AND PLEASANT VIEW	42°56'03.70"	78°41'48.50"	REPLACE	MOD 5	OPTION A	3	2.0	1	REPLACE	26		5	1	1.1	GAS VALVE, GUY WIRE	Y	
R-21	SE CORNER OF TRANSIT RD. AND PLEASANTVIEW DR. CURB RAMP 1 (X-ING PLEASANTVIEW)	42°56'02.95"	78°41'48.35"	NEW	MOD 7	OPTION A	5	3.0	2	REPLACE	12		5	1	1.1		Y	
R-22	SE CORNER OF TRANSIT RD. AND PLEASANTVIEW DR. CURB RAMP 2 (X-ING TRANSIT)	42°56'02.85"	78°41'48.48"	NEW		OPTION A				REPLACE	12		5	1	1.1		Y	
R-23	NE CORNER OF TRANSIT RD. AND TOPS DRIVEWAY (NORTH)	42°55'52.78"	78°41'48.47"	REPLACE	1	OPTION A	3	2.0	1	REPLACE	11		5	1	1.1		Y	
R-24	SE CORNER OF TRANSIT RD. AND TOPS DRIVEWAY (NORTH)	42°55'52.40"	78°41'48.49"	REPLACE	1	OPTION A	5	3.0	2	REPLACE	29		5	1	1.1		Y	
R-25	NW CORNER OF TRANSIT RD. AND MCDONALD DRIVEWAY CURB RAMP 1 (X-ING TRANSIT)	42°55'49.42"	78°41'49.47"	REPLACE	MOD 7	OPTION A	6	4.0	2	REPLACE	16		5	1	1.1	WATER VALVE	Y	
R-26	NW CORNER OF TRANSIT RD. AND MCDONALD DRIVEWAY CURB RAMP 2 (X-ING MACDONALD DRIVEWAY)	42°55'49.34"	78°41'49.53"	REPLACE		OPTION A				REPLACE	16		5	1	1.1		Y	
R-27	NE CORNER OF TRANSIT RD. AND TOPS DRIVEWAY (SOUTH) CURB RAMP 1 (X-ING TRANSIT)	42°55'49.37"	78°41'48.47"	REPLACE	MOD 5	OPTION A	5	3.0	2	REPLACE	13		5	1	1.1		Y	
R-28	NE CORNER OF TRANSIT RD AND TOPS DRIVEWAY (SOUTH) CURB RAMP 2 (X-ING TOPS DRIVEWAY)	42°55'49.35"	78°41'48.44"	REPLACE		OPTION A				REPLACE	13		5	1	1.1		Y	
R-29	SE CORNER OF TRANSIT RD. AND TOPS DRIVEWAY (SOUTH) CURB RAMP 1 (X-ING TOPS DRIVEWAY)	42°55'48.64"	78°41'48.29"	REPLACE	MOD 5	OPTION A	5	3.0	2	REPLACE	18		5	1	1.1		Y	
R-30	SE CORNER OF TRANSIT RD. AND TOPS DRIVEWAY (SOUTH) CURB RAMP 2 (X-ING TRANSIT)	42°55'48.54"	78°41'48.36"	REPLACE		OPTION A				REPLACE	18		5	1	1.1		Y	
R-31	SW CORNER OF TRANSIT RD. AND MCDONALDS DRIVEWAY CURB RAMP 1 (X-ING MCDONALDS DRIVEWAY)	42°55'48.48"	78°41'49.51"	REPLACE	MOD 7	OPTION A	10	6.0	4	REPLACE	20		5	1	1.1	WATER VALVE	Y	
R-32	SW CORNER OF TRANSIT RD. AND MCDONALDS DRIVEWAY CURB RAMP 2 (X-ING TRANSIT)	42°55'48.52"	78°41'49.46"	REPLACE		OPTION A				REPLACE	20		5	1	1.1		Y	
R-33	NE CORNER OF TRANSIT RD. AND REHM RD.	42°55'40.54"	78°41'48.46"	NEW	1	OPTION A	3	2.0	1	REPLACE	23		5	1	1.1	WATER VALVE	Y	
R-34	NW CORNER OF TRANSIT RD. AND REHM RD.	42°55'40.56"	78°41'49.50"	REPLACE	1	OPTION A	5	3.0	2	REPLACE	39		5	1	1.1		Y	
R-35	SE CORNER OF TRANSIT RD. AND REHM RD.	42°55'39.99"	78°41'49.47"	REPLACE	1	OPTION A	3	2.0	1	REPLACE	40		5	1	1.1	GUY WIRE	Y	
R-36	SW CORNER OF TRANSIT RD. AND REHM RD.	42°55'40.01"	78°41'48.45"	REPLACE	1	OPTION A	3	2.0	1	REPLACE	37		5	1	1.1		Y	
R-37	NE CORNER OF TRANSIT RD. AND HANWELL PL.	42°55'33.14"	78°41'48.41"	REPLACE	1	OPTION A	3.6	2.0	1	REPLACE	36.0		5	1	1.1		Y	
R-38	SE CORNER OF TRANSIT RD. AND HANWELL PL.	42°55'32.64"	78°41'48.46"	REPLACE	1	OPTION A	5.8	3.0	2	REPLACE	37.0		5	1	1.1	GAS VALVE	Y	
R-39	NW CORNER OF TRANSIT RD. AND LEE ST.	42°55'28.87"	78°41'49.50"	REPLACE	1	OPTION A	5.3	3.0	2	REPLACE	46.0		5	1	1.1		Y	
R-40	SW CORNER OF TRANSIT RD. AND LEE ST.	42°55'28.34"	78°41'49.47"	REPLACE	1	OPTION A	5	3.0	2	REPLACE	39.0		5	1	1.1		Y	
R-41	NW CORNER OF TRANSIT RD. AND AIRVIEW TERR.	42°55'26.01"	78°41'49.56"	REPLACE	1	OPTION A	3.3	2.0	1	REPLACE	24.0		5	1	1.1		Y	
R-42	SW CORNER OF TRANSIT RD. AND AIRVIEW TERR.	42°55'25.56"	78°41'49.55"	REPLACE	1	OPTION A	6	4.0	2	REPLACE	74.0		5	1	1.1	GAS VALVE	Y	
R-43	NE CORNER OF TRANSIT RD. AND ENTRY DR.	42°55'16.11"	78°41'48.39"	REPLACE	1	OPTION A	5.1	3.0	2	REPLACE	25.0		5	1	1.1		Y	
R-44	SE CORNER OF TRANSIT RD. AND ENTRY DR.	42°55'15.60"	78°41'48.41"	REPLACE	1	OPTION A	8.1	5.0	3	REPLACE	36		5	1	1.1		Y	
R-45	NE CORNER OF TRANSIT RD. AND ARGUS DR.	42°55'10.59"	78°41'48.35"	REPLACE	1	OPTION A	7.1	4.0	2	REPLACE	25.0		5	1	1.1		Y	
R-46	SE CORNER OF TRANSIT RD. AND ARGUS DR.	42°55'10.11"	78°41'48.37"	REPLACE	1	OPTION A	7	4.0	2	REPLACE	25.0		5	1	1.1		Y	
R-47	NE CORNER OF TRANSIT RD. AND FRENCH DR. CURB RAMP 1 (X-ING TRANSIT)	42°55'07.47"	78°41'48.44"	REPLACE	MOD 7	OPTION A	6.5	4.0	2.5	REPLACE	20.0		5	1	1.1		Y	
R-48	NE CORNER OF TRANSIT RD. AND FRENCH DR. CURB RAMP 2 (X-ING FRENCH)	42°55'07.37"	78°41'48.34"	REPLACE	MOD 7	OPTION A	6.5	4.0	2.5	REPLACE	20.0		5	1	1.1		Y	
R-49	NW CORNER OF TRANSIT RD. AND FRENCH DR. CURB RAMP 1 (X-ING TRANSIT)	42°55'07.37"	78°41'49.39"	REPLACE	MOD 7	OPTION A	5	3.0	2	REPLACE	32.0		5	1	1.1		Y	
R-50	NW CORNER OF TRANSIT RD. AND FRENCH DR. CURB RAMP 2 (X-ING FRENCH)	42°55'07.28"	78°41'49.49"	REPLACE	MOD 7	OPTION A	5	3.0	2	REPLACE	32.0		5	1	1.1		Y	
R-51	SE CORNER OF TRANSIT RD. AND FRENCH DR. CURB RAMP 1 (X-ING FRENCH)	42°55'06.82"	78°41'49.45"	REPLACE	MOD 7	OPTION A	5	3.0	2	REPLACE	35.0		5	1	1.1	TELEPHONE MANHOLE, UTILITY POLE	Y	
R-52	SE CORNER OF TRANSIT RD. AND FRENCH DR. CURB RAMP 1 (X-ING TRANSIT)	42°55'06.73"	78°41'49.30"	REPLACE	MOD 7	OPTION A	5	3.0	2	REPLACE	35.0		5	1	1.1		Y	
R-53	SW CORNER OF TRANSIT RD. AND FRENCH DR. CURB RAMP 1 (X-ING FRENCH)	42°55'06.73"	78°41'48.38"	REPLACE	MOD 5	OPTION A	2.50	1.5	1	REPLACE	18		5	1	1.1	GAS VALVE	Y	
R-54	SW CORNER OF TRANSIT RD. AND FRENCH DR. CURB RAMP 1 (X-ING TRANSIT)	42°55'06.82"	78°41'48.29"	REPLACE	MOD 5	OPTION A	2.50	1.5	1	REPLACE	18		5	1	1.1			
						TOTAL QUANTITY (SF):		146.0										

SEE CURB RAMP PLANS, DWG. NO. CRP-1 THRU CRP-9 FOR NUMBERED LOCATIONS.

NOTES:

1. FOR RAMP TYPE REFER TO 608-01 STANDARD SHEETS (SHEETS 4, 5, 6 AND 7 OF 9).
2. FOR DETECTABLE WARNING ORIENTATION REFER TO 608-01 STANDARD SHEET (SHEET 2 OF 9).
3. N/A = NOT APPLICABLE

AFFIX SEAL:
ON:

D264571

STATE OF NEW YORK · ROBERT F. SCHALLER · NO. 082465 · LICENSED PROFESSIONAL ENGINEER

ALTERED BY:
ON:

AS-BUILT REVISIONS
DESCRIPTION OF ALTERATIONS:

NY 78, TRANSIT ROAD, S.H. 1334A-1
FRENCH ROAD TO WEHRLE DRIVE
TOWNS OF CHEEKTOWAGA & LANCASTER
VILLAGE OF DEPEW
COUNTY: ERIE REGION: 05

PIN 5813.61
NY 78
UTILITY QUALITY LEVEL D

BRIDGES

CULVERTS

ALL DIMENSIONS IN ft UNLESS OTHERWISE NOTED

CURB RAMP TABLE

CONTRACT NUMBER
D264571

DRAWING NO. CRT-1
SHEET NO. 225

IT IS A VIOLATION OF LAW FOR ANY PERSON, UNLESS THEY ARE ACTING UNDER THE DIRECTION OF A LICENSED PROFESSIONAL ENGINEER, ARCHITECT, LANDSCAPE ARCHITECT, OR LAND SURVEYOR, TO ALTER AN ITEM IN ANY WAY. IF AN ITEM BEARING THE STAMP OF A LICENSED PROFESSIONAL IS ALTERED, THE ALTERING ENGINEER, ARCHITECT, LANDSCAPE ARCHITECT, OR LAND SURVEYOR SHALL STAMP THE DOCUMENT AND INCLUDE THE NOTATION "ALTERED BY" FOLLOWED BY THEIR SIGNATURE, THE DATE OF SUCH ALTERATION, AND A SPECIFIC DESCRIPTION OF THE ALTERATION.

NEW YORK STATE OF OPPORTUNITY. Department of Transportation

PROJECT MANAGER S. S. VAIDYA
CHECK R. F. SCHALLER
DRAFTING C. L. CRITES
CHECK R. F. SCHALLER
DESIGN C. L. CRITES
JOB MANAGER R. F. SCHALLER
DESIGN SUPERVISOR S. S. VAIDYA
FILE NAME = 581361_CPH_HWY_CRT-1.dgn
DATE/TIME = 22-JUN-2021 12:43
USER = crites

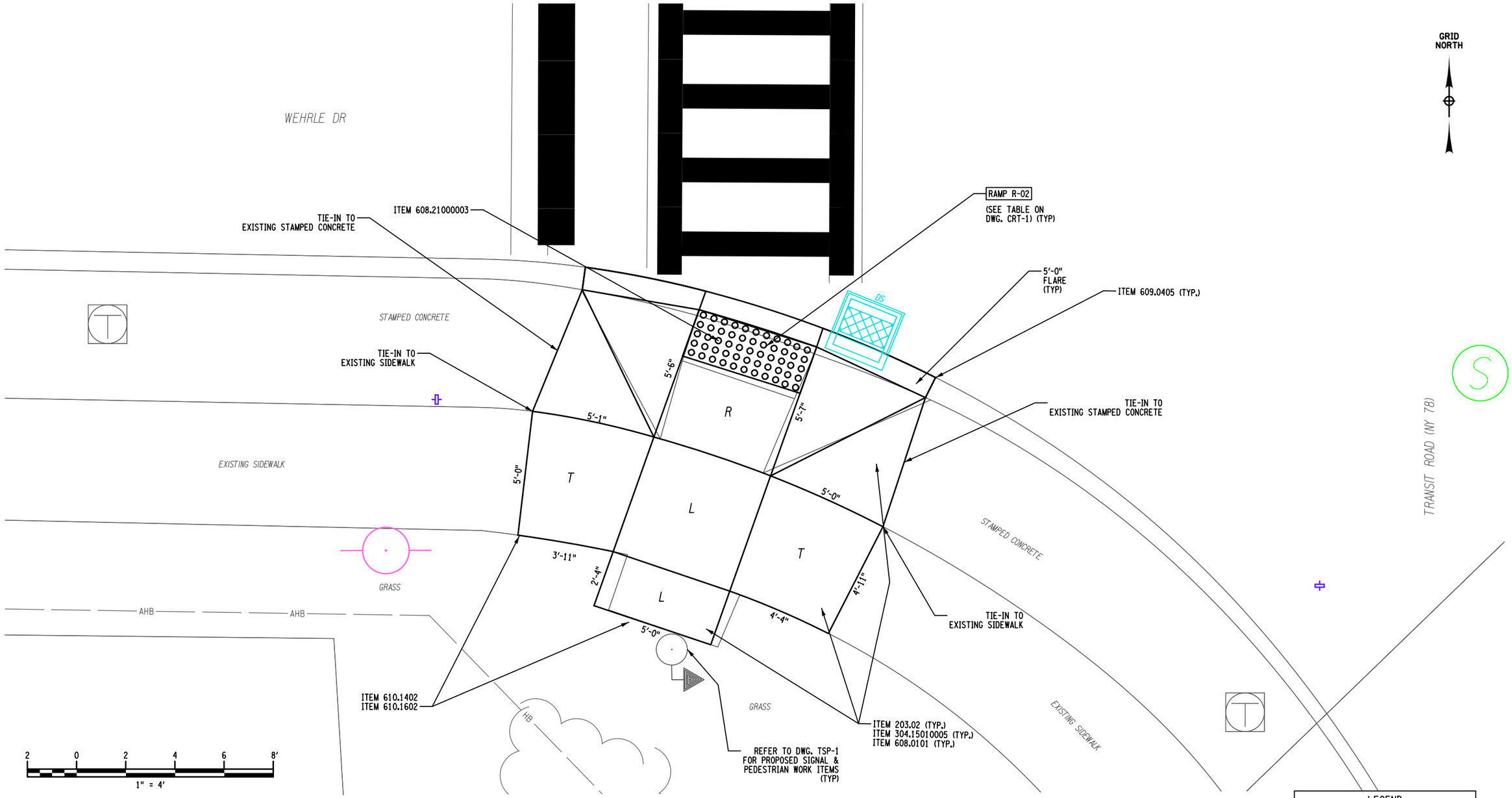

ITEM SUMMARY:

ITEM 203.02 - UNCLASSIFIED EXCAVATION AND DISPOSAL (CY)
ITEM 304.15010005 - SUBBASE COURSE, OPTIONAL TYPE (MODIFIED) (CY)
ITEM 608.0101 - CONCRETE SIDEWALKS AND DRIVEWAYS (CY)
ITEM 608.21000003 - CAST IRON EMBEDDED DETECTABLE WARNING UNITS (SY)
ITEM 609.0405 - CAST-IN-PLACE CONCRETE CURB TYPE M100 (LF)
ITEM 610.1402 - TOPSOIL - ROADSIDE (CY)
ITEM 610.1602 - TURF ESTABLISHMENT - LAWNS (SY)

LEGEND
L = LANDING / TURNING SPACE
R = RAMP
T = TRANSITION

AFFIX SEAL: ON:

ALTERED BY: ON:

D264571

STATE OF NEW YORK · ROBERT F. SCHALLER · NO. 082465 · LICENSED PROFESSIONAL ENGINEER

AS-BUILT REVISIONS DESCRIPTION OF ALTERATIONS:	NY 78, TRANSIT ROAD, S.H. 1334A-1 FRENCH ROAD TO WEHRLE DRIVE TOWNS OF CHEEKTOWAGA & LANCASTER VILLAGE OF DEPEW COUNTY: ERIE REGION: 05	PIN 5813.61 NY 78	BRIDGES	CULVERTS	ALL DIMENSIONS IN ft UNLESS OTHERWISE NOTED CURB RAMP / ADA PLANS SW - TRANSIT & WEHRLE DR.	CONTRACT NUMBER D264571 DRAWING NO. CRP-1 SHEET NO. 226

IT IS A VIOLATION OF LAW FOR ANY PERSON, UNLESS THEY ARE ACTING UNDER THE DIRECTION OF A LICENSED PROFESSIONAL ENGINEER, ARCHITECT, LANDSCAPE ARCHITECT, OR LAND SURVEYOR, TO ALTER AN ITEM IN ANY WAY. IF AN ITEM BEARING THE STAMP OF A LICENSED PROFESSIONAL IS ALTERED, THE ALTERING ENGINEER, ARCHITECT, LANDSCAPE ARCHITECT, OR LAND SURVEYOR SHALL STAMP THE DOCUMENT AND INCLUDE THE NOTATION "ALTERED BY" FOLLOWED BY THEIR SIGNATURE, THE DATE OF SUCH ALTERATION, AND A SPECIFIC DESCRIPTION OF THE ALTERATION.

NEW YORK STATE OF OPPORTUNITY. Department of Transportation

DESIGN SUPERVISOR S. S. VAIDYA JOB MANAGER R. F. SCHALLER DESIGN H. M. BELACHEW CHECK R. F. SCHALLER DRAFTING H. M. BELACHEW CHECK R. F. SCHALLER PROJECT MANAGER S. S. VAIDYA

FILE NAME = 581361_CPH_HWY_CRP-1.dgn
DATE/TIME = 22-JUN-2021 12:43
USER = cortes

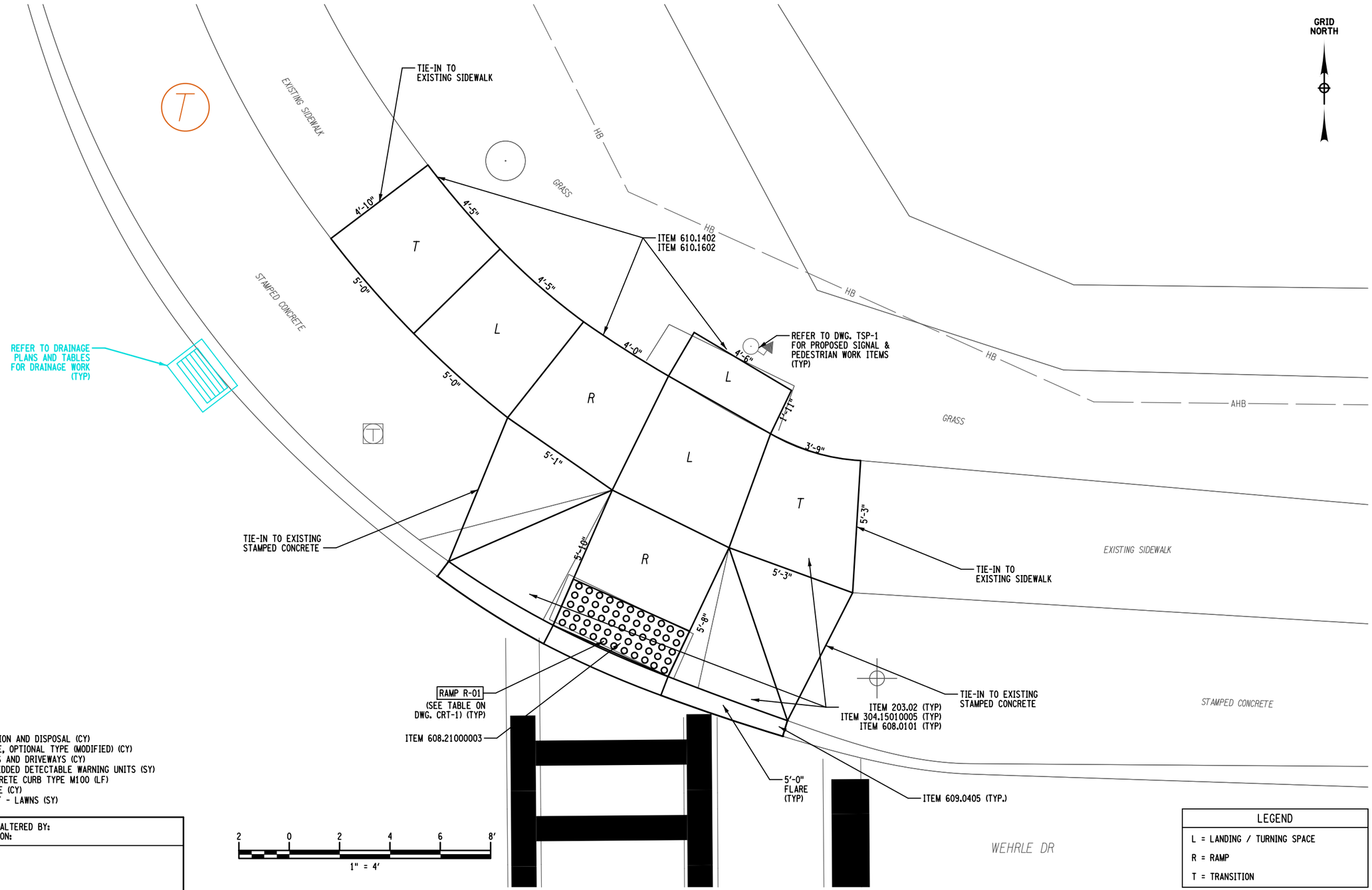

ITEM SUMMARY:

ITEM 203.02 - UNCLASSIFIED EXCAVATION AND DISPOSAL (CY)
ITEM 304.15010005 - SUBBASE COURSE, OPTIONAL TYPE (MODIFIED) (CY)
ITEM 608.0101 - CONCRETE SIDEWALKS AND DRIVEWAYS (CY)
ITEM 608.21000003 - CAST IRON EMBEDDED DETECTABLE WARNING UNITS (SY)
ITEM 609.0405 - CAST-IN-PLACE CONCRETE CURB TYPE M100 (LF)
ITEM 610.1402 - TOPSOIL - ROADSIDE (CY)
ITEM 610.1602 - TURF ESTABLISHMENT - LAWNS (SY)

LEGEND
L = LANDING / TURNING SPACE
R = RAMP
T = TRANSITION

AFFIX SEAL:
ON:

ALTERED BY:
ON:

D264571

STATE OF NEW YORK
ROBERT F. SCHALLER
NO. 082465
LICENSED PROFESSIONAL ENGINEER

AS-BUILT REVISIONS
DESCRIPTION OF ALTERATIONS:

NY 78, TRANSIT ROAD, S.H. 1334A-1
FRENCH ROAD TO WEHRLE DRIVE
TOWNS OF CHEEKTOWAGA & LANCASTER
VILLAGE OF DEPEW
COUNTY: ERIE REGION: 05

PIN 5813.61
NY 78

BRIDGES

CULVERTS

ALL DIMENSIONS IN ft UNLESS OTHERWISE NOTED

CURB RAMP / ADA PLANS
NE - TRANSIT & WEHRLE

CONTRACT NUMBER
D264571

DRAWING NO. CRP-2
SHEET NO. 227

IT IS A VIOLATION OF LAW FOR ANY PERSON, UNLESS THEY ARE ACTING UNDER THE DIRECTION OF A LICENSED PROFESSIONAL ENGINEER, ARCHITECT, LANDSCAPE ARCHITECT, OR LAND SURVEYOR, TO ALTER AN ITEM IN ANY WAY. IF AN ITEM BEARING THE STAMP OF A LICENSED PROFESSIONAL IS ALTERED, THE ALTERING ENGINEER, ARCHITECT, LANDSCAPE ARCHITECT, OR LAND SURVEYOR SHALL STAMP THE DOCUMENT AND INCLUDE THE NOTATION "ALTERED BY" FOLLOWED BY THEIR SIGNATURE, THE DATE OF SUCH ALTERATION, AND A SPECIFIC DESCRIPTION OF THE ALTERATION.

NEW YORK STATE OF OPPORTUNITY. Department of Transportation

DESIGN SUPERVISOR S. S. VAIDYA JOB MANAGER R. F. SCHALLER DESIGN H. M. BELACHEW CHECK R. F. SCHALLER DRAFTING H. M. BELACHEW CHECK R. F. SCHALLER PROJECT MANAGER S. S. VAIDYA

FILE NAME = 581361_CPH_HWY_CRP-2.dgn
DATE/TIME = 22-JUN-2021 12:43
USER = cortes

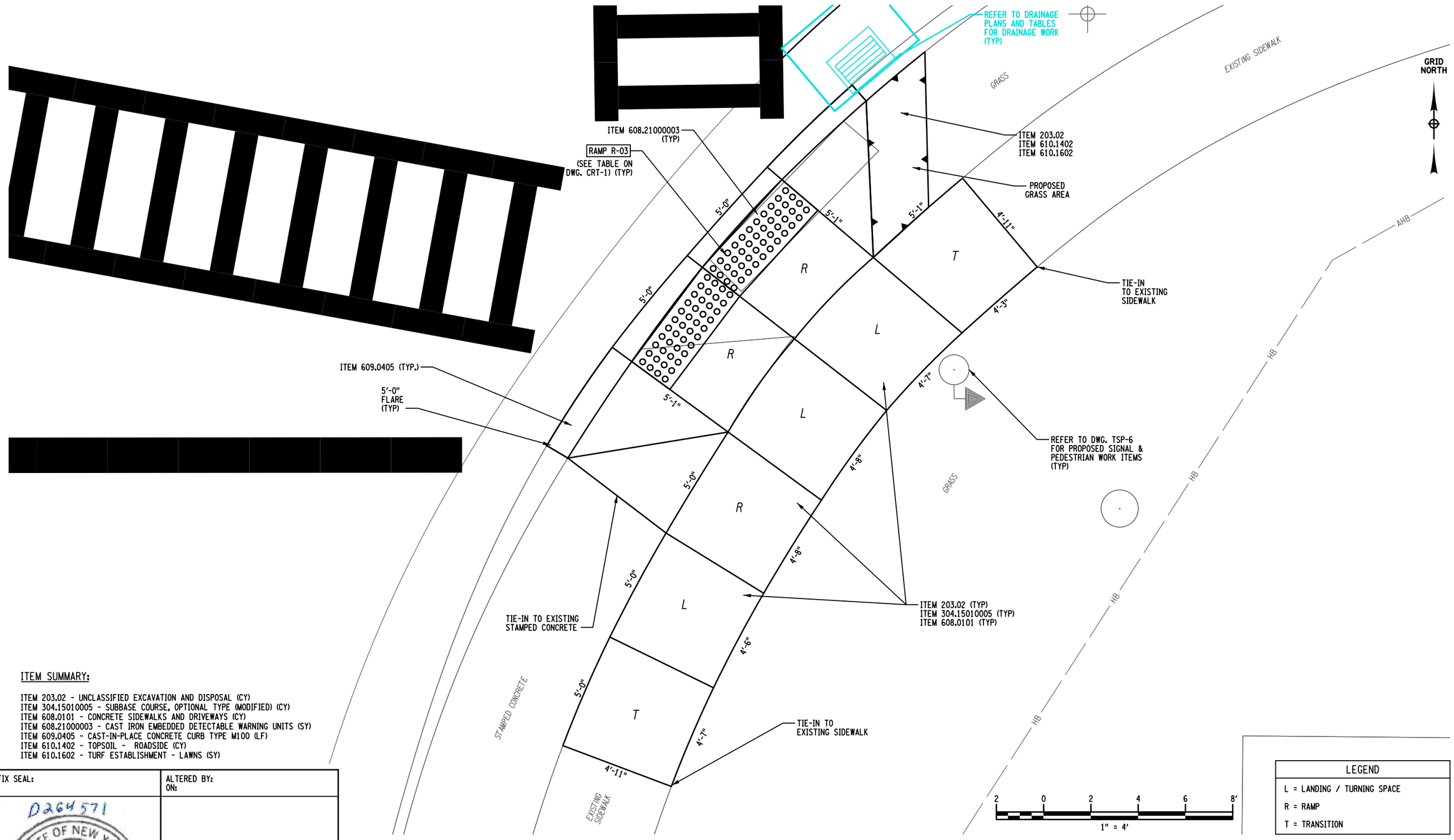

ITEM SUMMARY:

ITEM 203.02 - UNCLASSIFIED EXCAVATION AND DISPOSAL (CY)
ITEM 304.15010005 - SUBBASE COURSE, OPTIONAL TYPE (MODIFIED) (CY)
ITEM 608.0101 - CONCRETE SIDEWALKS AND DRIVEWAYS (CY)
ITEM 608.21000003 - CAST IRON EMBEDDED DETECTABLE WARNING UNITS (SY)
ITEM 609.0405 - CAST-IN-PLACE CONCRETE CURB TYPE M100 (LF)
ITEM 610.1402 - TOPSOIL - ROADSIDE (CY)
ITEM 610.1602 - TURF ESTABLISHMENT - LAWNS (SY)

LEGEND
L = LANDING / TURNING SPACE
R = RAMP
T = TRANSITION

AFFIX SEAL:
ON:

ALTERED BY:
ON:

D264571
STATE OF NEW YORK
ROBERT F. SCHALLER
NO. 082465
LICENSED PROFESSIONAL ENGINEER

AS-BUILT REVISIONS
DESCRIPTION OF ALTERATIONS:

NY 78, TRANSIT ROAD, S.H. 1334A-1
FRENCH ROAD TO WEHRLE DRIVE
TOWNS OF CHEEKTOWAGA & LANCASTER
VILLAGE OF DEPEW
COUNTY: ERIE REGION: 05

PIN 5813.61
NY 78

BRIDGES

CULVERTS

ALL DIMENSIONS IN ft UNLESS OTHERWISE NOTED

CURB RAMP / ADA PLANS
SE - TRANSIT & FREEMAN

CONTRACT NUMBER
D264571

DRAWING NO. CRP-3
SHEET NO. 228

IT IS A VIOLATION OF LAW FOR ANY PERSON, UNLESS THEY ARE ACTING UNDER THE DIRECTION OF A LICENSED PROFESSIONAL ENGINEER, ARCHITECT, LANDSCAPE ARCHITECT, OR LAND SURVEYOR, TO ALTER AN ITEM IN ANY WAY. IF AN ITEM BEARING THE STAMP OF A LICENSED PROFESSIONAL IS ALTERED, THE ALTERING ENGINEER, ARCHITECT, LANDSCAPE ARCHITECT, OR LAND SURVEYOR SHALL STAMP THE DOCUMENT AND INCLUDE THE NOTATION "ALTERED BY" FOLLOWED BY THEIR SIGNATURE, THE DATE OF SUCH ALTERATION, AND A SPECIFIC DESCRIPTION OF THE ALTERATION.

NEW YORK STATE OF OPPORTUNITY. Department of Transportation

DESIGN SUPERVISOR S. S. VAIDYA
JOB MANAGER R. F. SCHALLER
DESIGN H. M. BELACHEW
CHECK R. F. SCHALLER
DRAFTING H. M. BELACHEW
CHECK R. F. SCHALLER
PROJECT MANAGER S. S. VAIDYA

FILE NAME = 581361_CPH_HWY_CRP-3.dgn
DATE/TIME = 22-JUN-2021 12:43
USER = corites

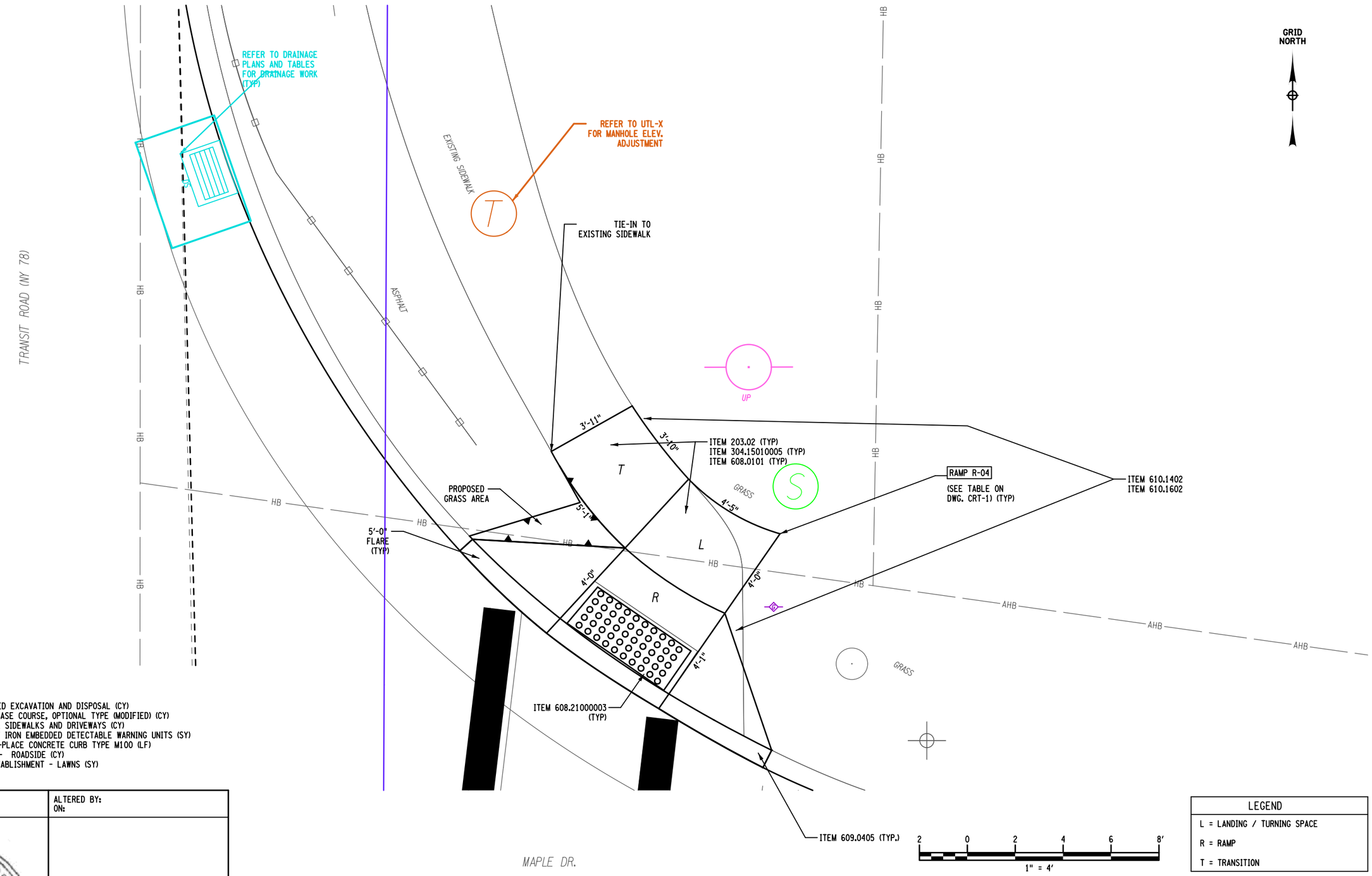

ITEM SUMMARY:

ITEM 203.02 - UNCLASSIFIED EXCAVATION AND DISPOSAL (CY)
ITEM 304.15010005 - SUBBASE COURSE, OPTIONAL TYPE (MODIFIED) (CY)
ITEM 608.0101 - CONCRETE SIDEWALKS AND DRIVEWAYS (CY)
ITEM 608.21000003 - CAST IRON EMBEDDED DETECTABLE WARNING UNITS (SY)
ITEM 609.0405 - CAST-IN-PLACE CONCRETE CURB TYPE M100 (LF)
ITEM 610.1402 - TOPSOIL - ROADSIDE (CY)
ITEM 610.1602 - TURF ESTABLISHMENT - LAWNS (SY)

LEGEND
L = LANDING / TURNING SPACE
R = RAMP
T = TRANSITION

AFFIX SEAL:
ON:

ALTERED BY:
ON:

D264571
STATE OF NEW YORK
ROBERT F. SCHALLER
NO. 082465
LICENSED PROFESSIONAL ENGINEER

AS-BUILT REVISIONS
DESCRIPTION OF ALTERATIONS:

NY 78, TRANSIT ROAD, S.H. 1334A-1
FRENCH ROAD TO WEHRLE DRIVE
TOWNS OF CHEEKTOWAGA & LANCASTER
VILLAGE OF DEPEW
COUNTY: ERIE REGION: 05

PIN 5813.61
NY 78

BRIDGES

CULVERTS

ALL DIMENSIONS IN ft UNLESS OTHERWISE NOTED

CURB RAMP / ADA PLANS
NE - TRANSIT & MAPLE DR

CONTRACT NUMBER
D264571

DRAWING NO. CRP-4
SHEET NO. 229

IT IS A VIOLATION OF LAW FOR ANY PERSON, UNLESS THEY ARE ACTING UNDER THE DIRECTION OF A LICENSED PROFESSIONAL ENGINEER, ARCHITECT, LANDSCAPE ARCHITECT, OR LAND SURVEYOR, TO ALTER AN ITEM IN ANY WAY. IF AN ITEM BEARING THE STAMP OF A LICENSED PROFESSIONAL IS ALTERED, THE ALTERING ENGINEER, ARCHITECT, LANDSCAPE ARCHITECT, OR LAND SURVEYOR SHALL STAMP THE DOCUMENT AND INCLUDE THE NOTATION "ALTERED BY" FOLLOWED BY THEIR SIGNATURE, THE DATE OF SUCH ALTERATION, AND A SPECIFIC DESCRIPTION OF THE ALTERATION.

NEW YORK STATE OF OPPORTUNITY. Department of Transportation

DESIGN SUPERVISOR S. S. VAIDYA
JOB MANAGER R. F. SCHALLER
DESIGN H. M. BELACHEW
CHECK R. F. SCHALLER
DRAFTING H. M. BELACHEW
CHECK R. F. SCHALLER
PROJECT MANAGER S. S. VAIDYA

FILE NAME = 581361_CPH_HWY_CRP-4.dgn
DATE/TIME = 22-JUN-2021 12:43
USER = cortes

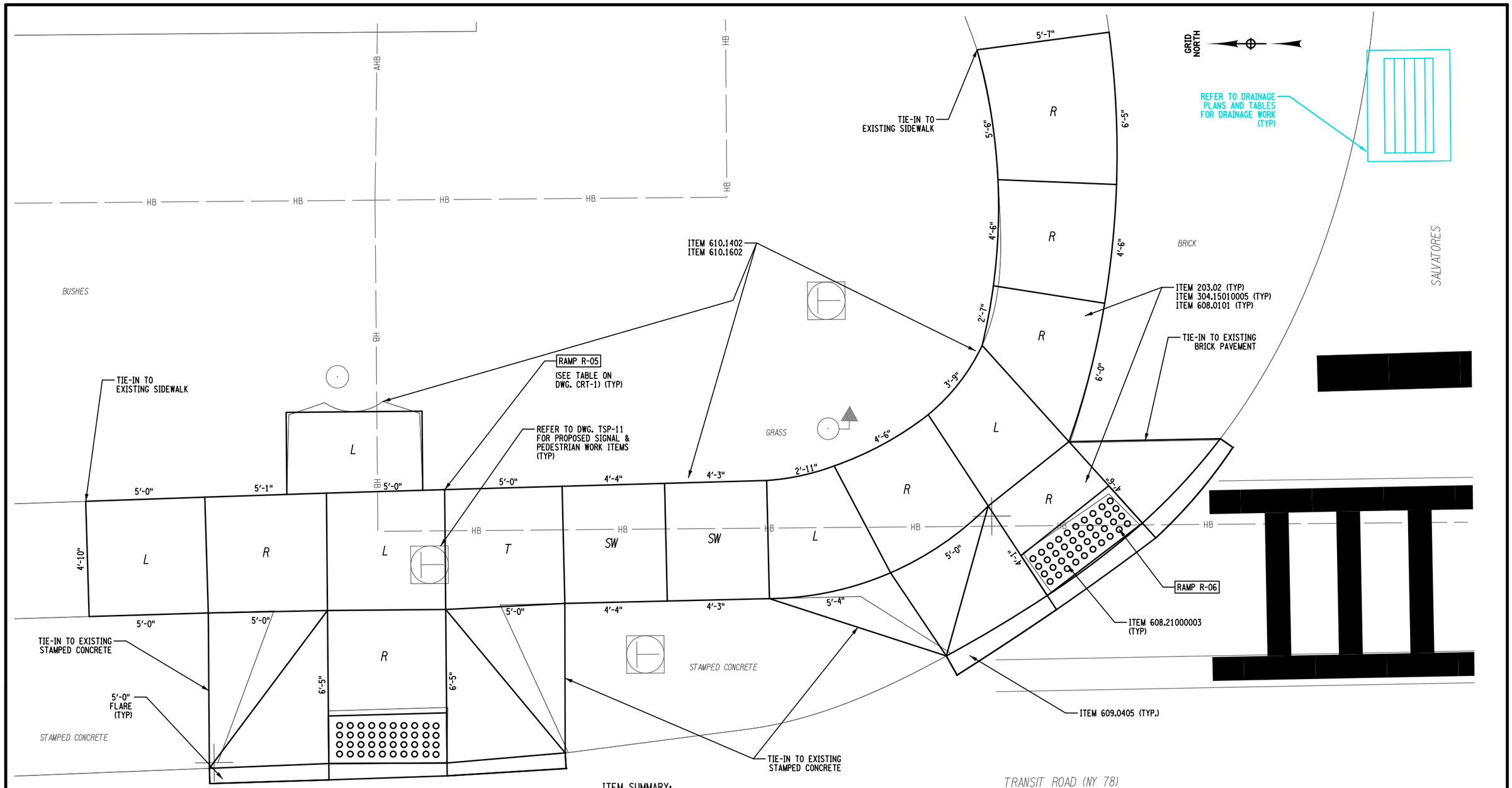

ITEM SUMMARY:

ITEM 203.02 - UNCLASSIFIED EXCAVATION AND DISPOSAL (CY)
ITEM 304.15010005 - SUBBASE COURSE, OPTIONAL TYPE (MODIFIED) (CY)
ITEM 608.0101 - CONCRETE SIDEWALKS AND DRIVEWAYS (CY)
ITEM 608.21000003 - CAST IRON EMBEDDED DETECTABLE WARNING UNITS (SY)
ITEM 609.0405 - CAST-IN-PLACE CONCRETE CURB TYPE M100 (LF)
ITEM 610.1402 - TOPSOIL - ROADSIDE (CY)
ITEM 610.1602 - TURF ESTABLISHMENT - LAWNS (SY)

2 0 2 4 6 8'
1" = 4'

LEGEND
L = LANDING / TURNING SPACE
R = RAMP
T = TRANSITION
SW = SIDEWALK

AFFIX SEAL: ON:

ALTERED BY: ON:

D264571

STATE OF NEW YORK · ROBERT F. SCHALLER · NO. 082465 · LICENSED PROFESSIONAL ENGINEER

AS-BUILT REVISIONS
DESCRIPTION OF ALTERATIONS:

NY 78, TRANSIT ROAD, S.H. 1334A-1
FRENCH ROAD TO WEHRLE DRIVE
TOWNS OF CHEEKTOWAGA & LANCASTER
VILLAGE OF DEPEW
COUNTY: ERIE REGION: 05

PIN 5813.61
NY 78

BRIDGES

CULVERTS

ALL DIMENSIONS IN ft UNLESS OTHERWISE NOTED

CURB RAMP / ADA PLANS
NE - TRANSIT & SALVATORS

CONTRACT NUMBER D264571

DRAWING NO. CRP-5
SHEET NO. 230

IT IS A VIOLATION OF LAW FOR ANY PERSON, UNLESS THEY ARE ACTING UNDER THE DIRECTION OF A LICENSED PROFESSIONAL ENGINEER, ARCHITECT, LANDSCAPE ARCHITECT, OR LAND SURVEYOR, TO ALTER AN ITEM IN ANY WAY. IF AN ITEM BEARING THE STAMP OF A LICENSED PROFESSIONAL IS ALTERED, THE ALTERING ENGINEER, ARCHITECT, LANDSCAPE ARCHITECT, OR LAND SURVEYOR SHALL STAMP THE DOCUMENT AND INCLUDE THE NOTATION "ALTERED BY" FOLLOWED BY THEIR SIGNATURE, THE DATE OF SUCH ALTERATION, AND A SPECIFIC DESCRIPTION OF THE ALTERATION.

NEW YORK STATE OF OPPORTUNITY. Department of Transportation

PROJECT MANAGER S. S. VAIDYA
CHECK R. F. SCHALLER
DRAFTING H. M. BELACHEW
CHECK R. F. SCHALLER
DESIGN H. M. BELACHEW
JOB MANAGER R. F. SCHALLER
DESIGN SUPERVISOR S. S. VAIDYA

FILE NAME = 581361_CPH_HWY_CRP-5.dgn
DATE/TIME = 22-JUN-2021 12:43
USER = cortes

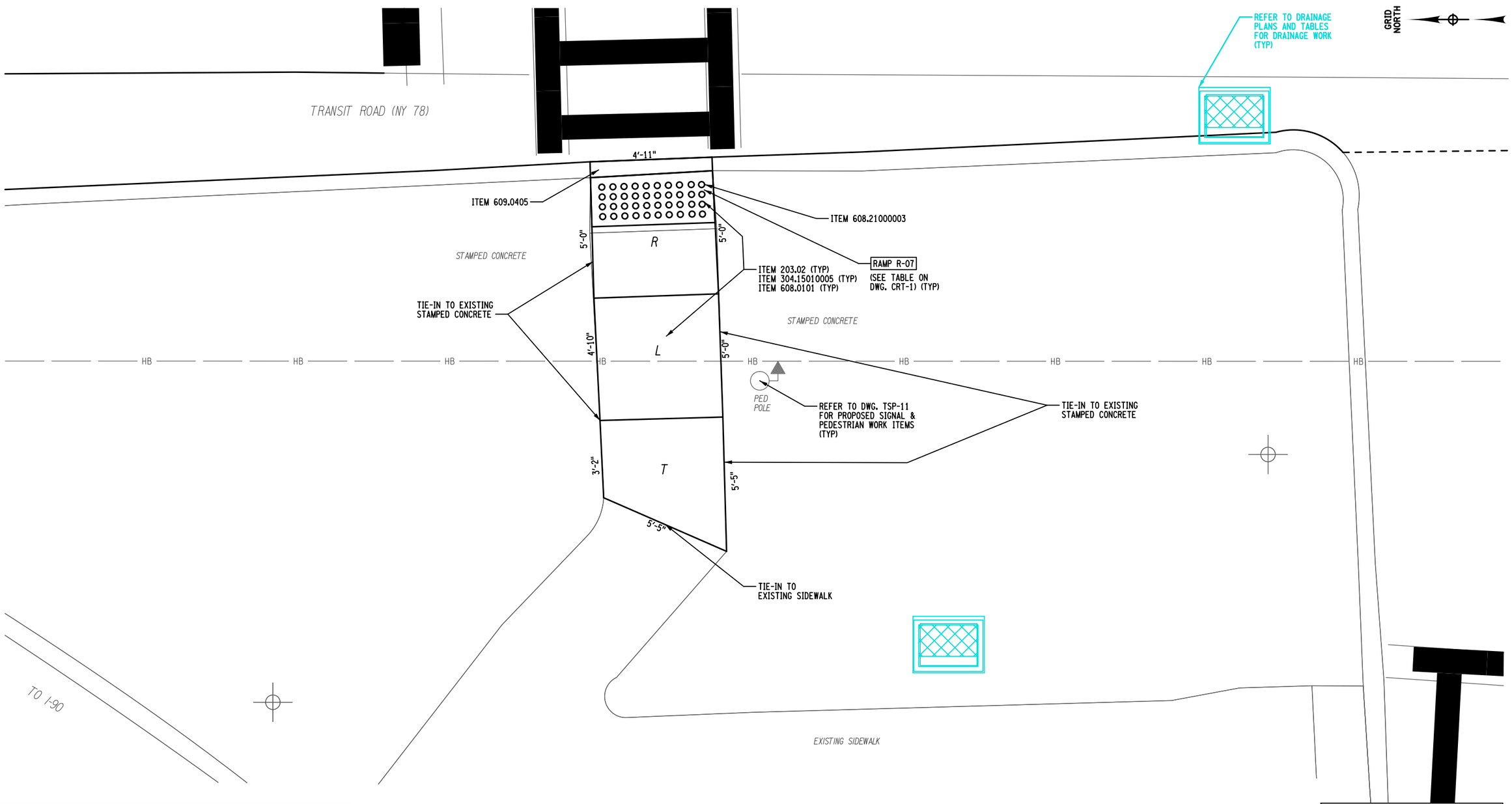

ITEM SUMMARY:

ITEM 203.02 - UNCLASSIFIED EXCAVATION AND DISPOSAL (CY)
ITEM 304.15010005 - SUBBASE COURSE, OPTIONAL TYPE (MODIFIED) (CY)
ITEM 608.0101 - CONCRETE SIDEWALKS AND DRIVEWAYS (CY)
ITEM 608.21000003 - CAST IRON EMBEDDED DETECTABLE WARNING UNITS (SY)
ITEM 609.0405 - CAST-IN-PLACE CONCRETE CURB TYPE M100 (LF)

2 0 2 4 6 8'
1" = 4'

LEGEND
L = LANDING / TURNING SPACE
R = RAMP
T = TRANSITION

AFFIX SEAL:
ON:

ALTERED BY:
ON:

D264571
STATE OF NEW YORK
ROBERT F. SCHALLER
NO. 082465
LICENSED PROFESSIONAL ENGINEER

AS-BUILT REVISIONS
DESCRIPTION OF ALTERATIONS:

NY 78, TRANSIT ROAD, S.H. 1334A-1
FRENCH ROAD TO WEHRLE DRIVE
TOWNS OF CHEEKTOWAGA & LANCASTER
VILLAGE OF DEPEW
COUNTY: ERIE REGION: 05

PIN 5813.61
NY 78

BRIDGES

CULVERTS

ALL DIMENSIONS IN ft UNLESS OTHERWISE NOTED

CURB RAMP / ADA PLANS
NW ISLAND- TRANSIT & I-90

CONTRACT NUMBER
D264571

DRAWING NO. CRP-6
SHEET NO. 231

IT IS A VIOLATION OF LAW FOR ANY PERSON, UNLESS THEY ARE ACTING UNDER THE DIRECTION OF A LICENSED PROFESSIONAL ENGINEER, ARCHITECT, LANDSCAPE ARCHITECT, OR LAND SURVEYOR, TO ALTER AN ITEM IN ANY WAY. IF AN ITEM BEARING THE STAMP OF A LICENSED PROFESSIONAL IS ALTERED, THE ALTERING ENGINEER, ARCHITECT, LANDSCAPE ARCHITECT, OR LAND SURVEYOR SHALL STAMP THE DOCUMENT AND INCLUDE THE NOTATION "ALTERED BY" FOLLOWED BY THEIR SIGNATURE, THE DATE OF SUCH ALTERATION, AND A SPECIFIC DESCRIPTION OF THE ALTERATION.

NEW YORK STATE OF OPPORTUNITY. Department of Transportation

PROJECT MANAGER S. S. VAIDYA
CHECK R. F. SCHALLER
DRAFTING H. M. BELACHEW
CHECK R. F. SCHALLER
DESIGN H. M. BELACHEW
JOB MANAGER R. F. SCHALLER
DESIGN SUPERVISOR S. S. VAIDYA

FILE NAME = 581361_CPH_HWY_CRP-6.dgn
DATE/TIME = 22-JUN-2021 12:43
USER = cortes

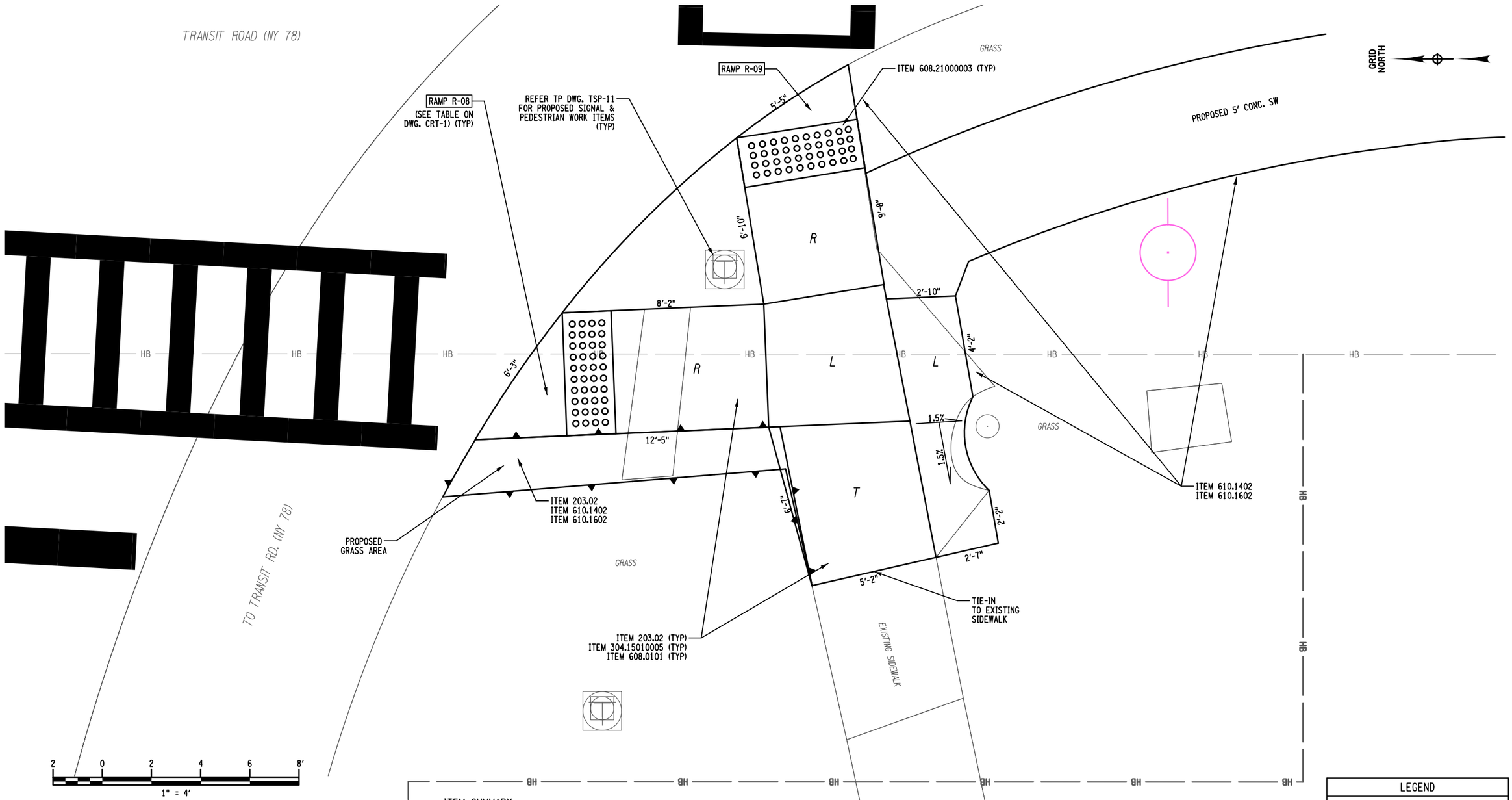

ITEM SUMMARY:

ITEM 203.02 - UNCLASSIFIED EXCAVATION AND DISPOSAL (CY)
ITEM 304.15010005 - SUBBASE COURSE, OPTIONAL TYPE (MODIFIED) (CY)
ITEM 608.0101 - CONCRETE SIDEWALKS AND DRIVEWAYS (CY)
ITEM 608.21000003 - CAST IRON EMBEDDED DETECTABLE WARNING UNITS (SY)
ITEM 610.1402 - TOPSOIL - ROADSIDE (CY)
ITEM 610.1602 - TURF ESTABLISHMENT - LAWNS (SY)

LEGEND
L = LANDING / TURNING SPACE
R = RAMP
T = TRANSITION
SW = SIDEWALK

AFFIX SEAL:
ON:

ALTERED BY:
ON:

D264571
STATE OF NEW YORK
ROBERT F. SCHALLER
NO. 082465
LICENSED PROFESSIONAL ENGINEER

AS-BUILT REVISIONS
DESCRIPTION OF ALTERATIONS:

NY 78, TRANSIT ROAD, S.H. 1334A-1
FRENCH ROAD TO WEHRLE DRIVE
TOWNS OF CHEEKTOWAGA & LANCASTER
VILLAGE OF DEPEW
COUNTY: ERIE REGION: 05

PIN 5813.61
NY 78

BRIDGES

CULVERTS

ALL DIMENSIONS IN ft UNLESS OTHERWISE NOTED

CURB RAMP / ADA PLANS
SW - TRANSIT & I-90

CONTRACT NUMBER
D264571

DRAWING NO. CRP-7
SHEET NO. 232

IT IS A VIOLATION OF LAW FOR ANY PERSON, UNLESS THEY ARE ACTING UNDER THE DIRECTION OF A LICENSED PROFESSIONAL ENGINEER, ARCHITECT, LANDSCAPE ARCHITECT, OR LAND SURVEYOR, TO ALTER AN ITEM IN ANY WAY. IF AN ITEM BEARING THE STAMP OF A LICENSED PROFESSIONAL IS ALTERED, THE ALTERING ENGINEER, ARCHITECT, LANDSCAPE ARCHITECT, OR LAND SURVEYOR SHALL STAMP THE DOCUMENT AND INCLUDE THE NOTATION "ALTERED BY" FOLLOWED BY THEIR SIGNATURE, THE DATE OF SUCH ALTERATION, AND A SPECIFIC DESCRIPTION OF THE ALTERATION.

NEW YORK STATE OF OPPORTUNITY. Department of Transportation

PROJECT MANAGER S. S. VAIDYA
CHECK R. F. SCHALLER
DRAFTING H. M. BELACHEW
CHECK R. F. SCHALLER
DESIGN H. M. BELACHEW
JOB MANAGER R. F. SCHALLER
DESIGN SUPERVISOR S. S. VAIDYA

FILE NAME = 581361_CPH_HWY_CRP-7.dgn
DATE/TIME = 22-JUN-2021 12:43
USER = ccrites

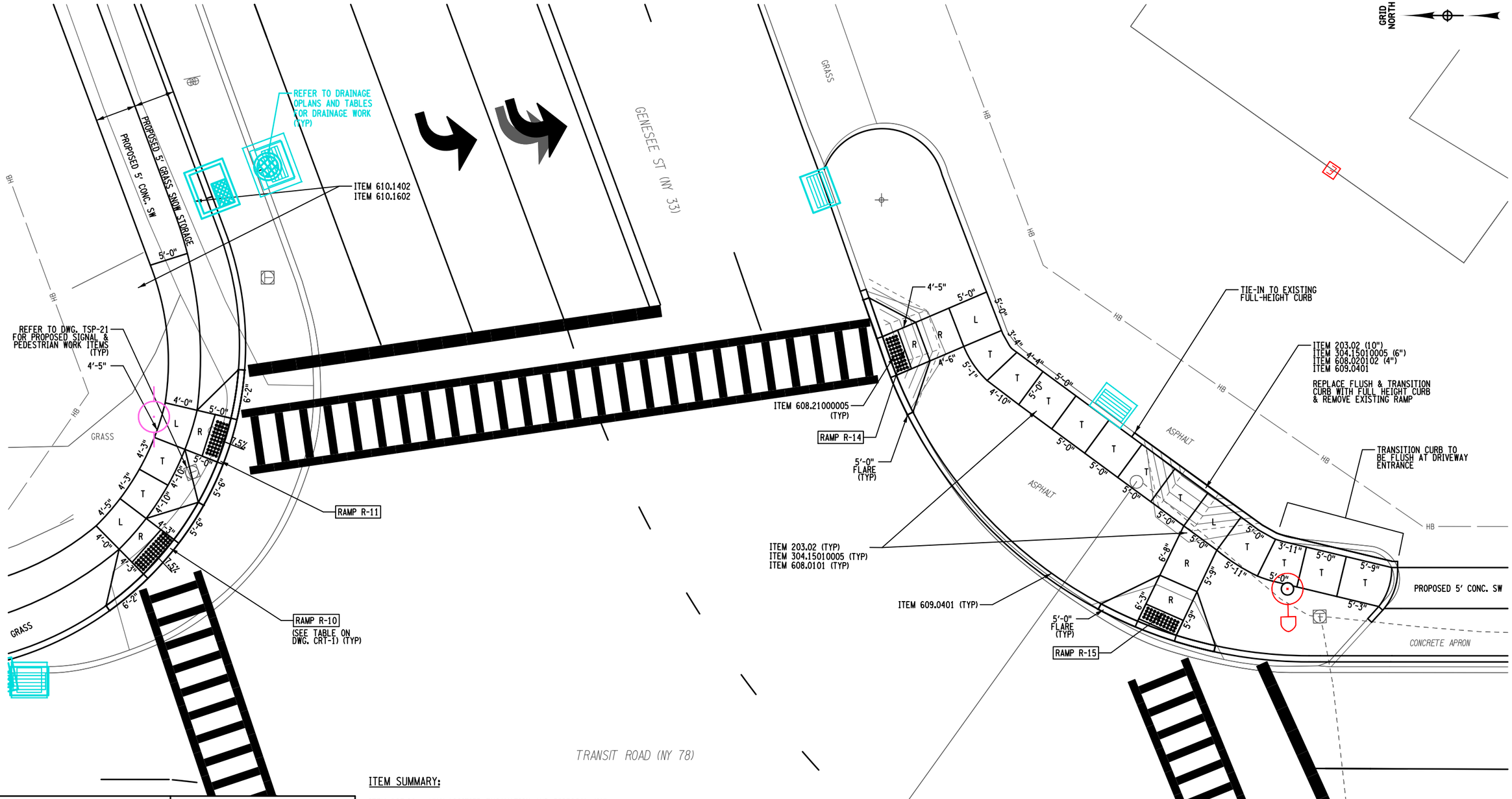

ITEM SUMMARY:

ITEM 203.02 - UNCLASSIFIED EXCAVATION AND DISPOSAL (CY)
ITEM 304.15010005 - SUBBASE COURSE, OPTIONAL TYPE (MODIFIED) (CY)
ITEM 608.0101 - CONCRETE SIDEWALKS AND DRIVEWAYS (CY)
ITEM 608.020102 - HMA SIDEWALKS, DRIVEWAYS, BIKE PATHS & VEGETATION CONTROL STRIPS (TON)
ITEM 608.2100005 - CAST IRON EMBEDDED DETECTABLE WARNING UNITS (SY)
ITEM 609.0401 - CAST-IN-PLACE CONCRETE CURB TYPE VF150 (LF)
ITEM 610.1402 - TOPSOIL - ROADSIDE (CY)
ITEM 610.1602 - TURF ESTABLISHMENT - LAWNS (SY)

6 0 6 12 18 24'
1" = 12'

LEGEND
L = LANDING / TURNING SPACE
R = RAMP
T = TRANSITION
SW = SIDEWALK

AFFIX SEAL:
ON:

D264571
STATE OF NEW YORK
ROBERT F. SCHALLER
NO. 082465
LICENSED PROFESSIONAL ENGINEER

ALTERED BY:
ON:

AS-BUILT REVISIONS DESCRIPTION OF ALTERATIONS:	NY 78, TRANSIT ROAD, S.H. 1334A-1	PIN 5813.61 NY 78	BRIDGES	CULVERTS	ALL DIMENSIONS IN ft UNLESS OTHERWISE NOTED
	FRENCH ROAD TO WEHRLE DRIVE				CURB RAMP / ADA PLANS NE & SE - TRANSIT & GENESEE
	TOWNS OF CHEEKTOWAGA & LANCASTER				CONTRACT NUMBER D264571
	VILLAGE OF DEPEW				DRAWING NO. CRP-8
	COUNTY: ERIE REGION: 05				SHEET NO. 233

IT IS A VIOLATION OF LAW FOR ANY PERSON, UNLESS THEY ARE ACTING UNDER THE DIRECTION OF A LICENSED PROFESSIONAL ENGINEER, ARCHITECT, LANDSCAPE ARCHITECT, OR LAND SURVEYOR, TO ALTER AN ITEM IN ANY WAY. IF AN ITEM BEARING THE STAMP OF A LICENSED PROFESSIONAL IS ALTERED, THE ALTERING ENGINEER, ARCHITECT, LANDSCAPE ARCHITECT, OR LAND SURVEYOR SHALL STAMP THE DOCUMENT AND INCLUDE THE NOTATION "ALTERED BY" FOLLOWED BY THEIR SIGNATURE, THE DATE OF SUCH ALTERATION, AND A SPECIFIC DESCRIPTION OF THE ALTERATION.

NEW YORK STATE OF OPPORTUNITY. Department of Transportation

DESIGN SUPERVISOR S. S. VAIDYA JOB MANAGER R. F. SCHALLER DESIGN H. M. BELACHEW DRAFTING H. M. BELACHEW CHECK R. F. SCHALLER CHECK R. F. SCHALLER PROJECT MANAGER S. S. VAIDYA
FILE NAME = 581361_CPH_HWY_CRP-8.dgn
DATE/TIME = 22-JUN-2021 12:44
USER = ccrites

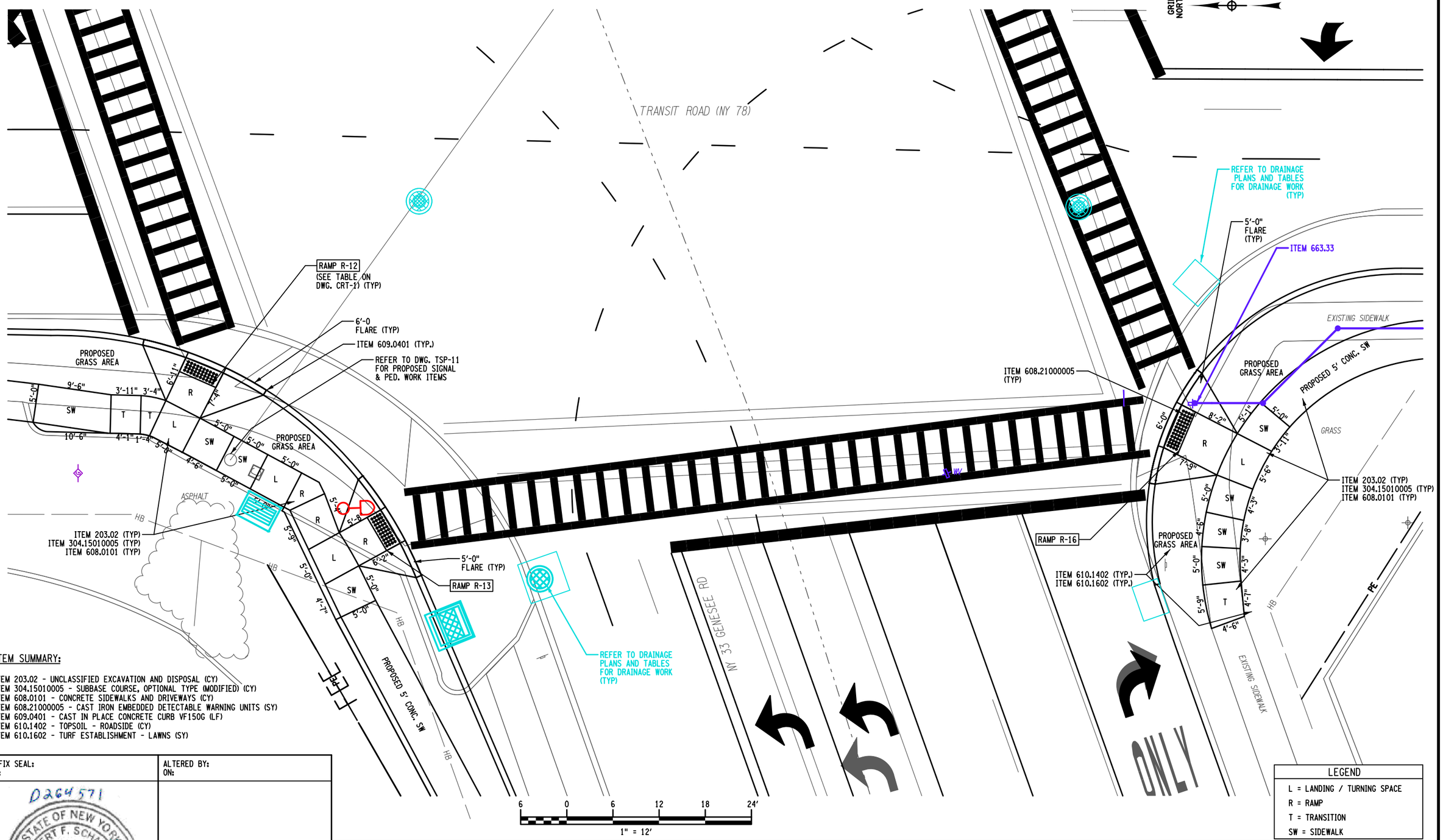

ITEM SUMMARY:

ITEM 203.02 - UNCLASSIFIED EXCAVATION AND DISPOSAL (CY)
ITEM 304.15010005 - SUBBASE COURSE, OPTIONAL TYPE (MODIFIED) (CY)
ITEM 608.0101 - CONCRETE SIDEWALKS AND DRIVEWAYS (CY)
ITEM 608.21000005 - CAST IRON EMBEDDED DETECTABLE WARNING UNITS (SY)
ITEM 609.0401 - CAST IN PLACE CONCRETE CURB VF150G (LF)
ITEM 610.1402 - TOPSOIL - ROADSIDE (CY)
ITEM 610.1602 - TURF ESTABLISHMENT - LAWNS (SY)

LEGEND
L = LANDING / TURNING SPACE
R = RAMP
T = TRANSITION
SW = SIDEWALK

AFFIX SEAL:
ON:

ALTERED BY:
ON:

D264571
STATE OF NEW YORK
ROBERT F. SCHALLER
NO. 082465
LICENSED PROFESSIONAL ENGINEER

AS-BUILT REVISIONS
DESCRIPTION OF ALTERATIONS:

NY 78, TRANSIT ROAD, S.H. 1334A-1
FRENCH ROAD TO WEHRLE DRIVE
TOWNS OF CHEEKTOWAGA & LANCASTER
VILLAGE OF DEPEW
COUNTY: ERIE REGION: 05

PIN 5813.61
NY 78

BRIDGES

CULVERTS

ALL DIMENSIONS IN ft UNLESS OTHERWISE NOTED

CURB RAMP / ADA PLANS
NW & SW - TRANSIT & GENESEE

CONTRACT NUMBER
D264571

DRAWING NO. CRP-9
SHEET NO. 234

IT IS A VIOLATION OF LAW FOR ANY PERSON, UNLESS THEY ARE ACTING UNDER THE DIRECTION OF A LICENSED PROFESSIONAL ENGINEER, ARCHITECT, LANDSCAPE ARCHITECT, OR LAND SURVEYOR, TO ALTER AN ITEM IN ANY WAY. IF AN ITEM BEARING THE STAMP OF A LICENSED PROFESSIONAL IS ALTERED, THE ALTERING ENGINEER, ARCHITECT, LANDSCAPE ARCHITECT, OR LAND SURVEYOR SHALL STAMP THE DOCUMENT AND INCLUDE THE NOTATION "ALTERED BY" FOLLOWED BY THEIR SIGNATURE, THE DATE OF SUCH ALTERATION, AND A SPECIFIC DESCRIPTION OF THE ALTERATION.

NEW YORK STATE OF OPPORTUNITY. Department of Transportation

DESIGN SUPERVISOR S. S. VAIDYA
JOB MANAGER R. F. SCHALLER
DESIGN H. M. BELACHEW
CHECK R. F. SCHALLER
DRAFTING H. M. BELACHEW
CHECK R. F. SCHALLER
PROJECT MANAGER S. S. VAIDYA

FILE NAME = 581361_CPH_HWY_CRP-9.dgn
DATE/TIME = 22-JUN-2021 12:44
USER = cortes

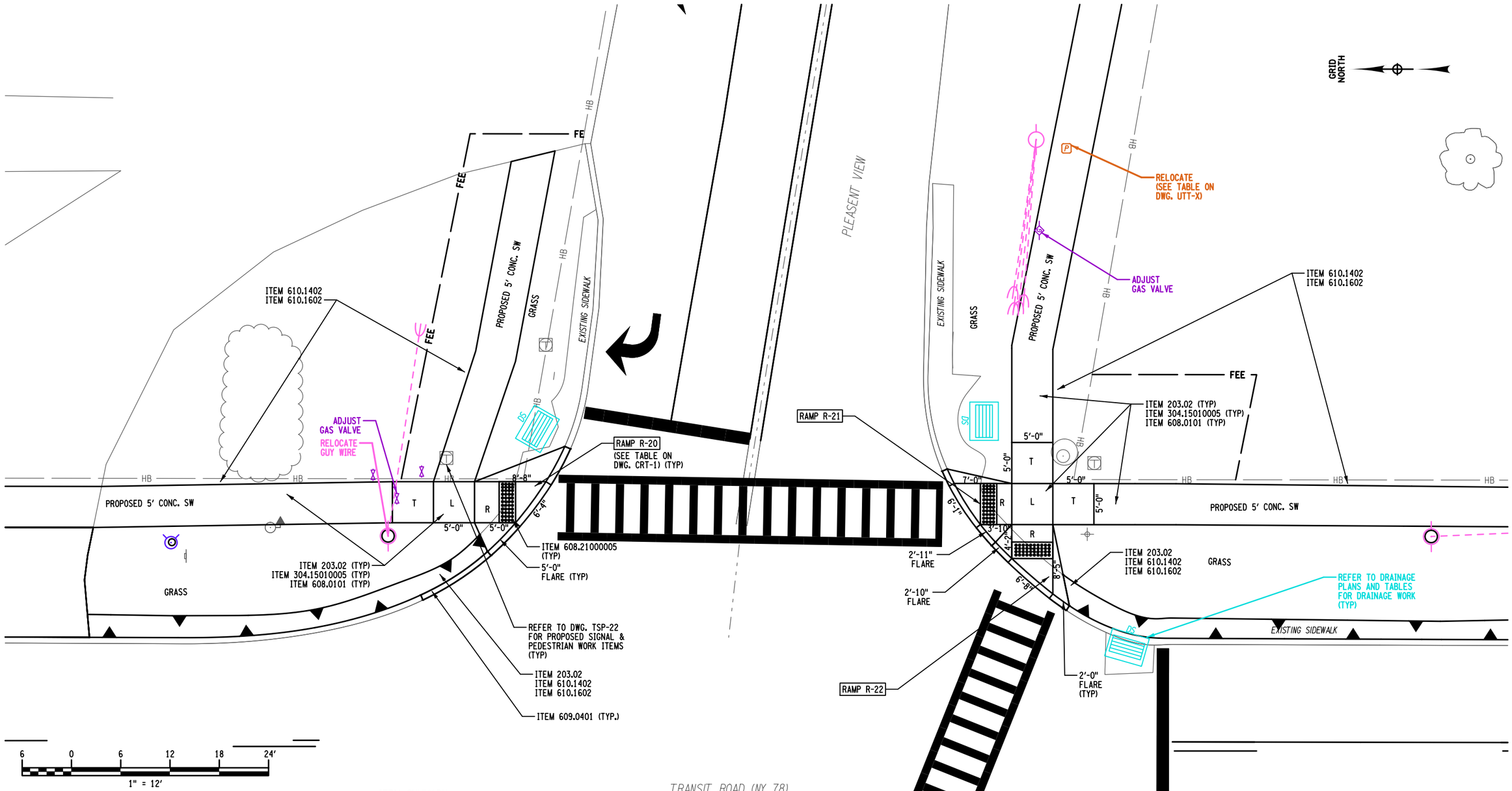

ITEM SUMMARY:

ITEM 203.02 - UNCLASSIFIED EXCAVATION AND DISPOSAL (CY)
ITEM 304.15010005 - SUBBASE COURSE, OPTIONAL TYPE (MODIFIED) (CY)
ITEM 608.0101 - CONCRETE SIDEWALKS AND DRIVEWAYS (CY)
ITEM 608.21000005 - CAST IRON EMBEDDED DETECTABLE WARNING UNITS (SY)
ITEM 609.0401 - CAST IN PLACE CONCRETE CURB VF150G (LF)
ITEM 610.1402 - TOPSOIL - ROADSIDE (CY)
ITEM 610.1602 - TURF ESTABLISHMENT - LAWNS (SY)

LEGEND
L = LANDING / TURNING SPACE
R = RAMP
T = TRANSITION
SW = SIDEWALK

AFFIX SEAL:
ON:

ALTERED BY:
ON:

D264571
STATE OF NEW YORK
ROBERT F. SCHALLER
NO. 082465
LICENSED PROFESSIONAL ENGINEER

AS-BUILT REVISIONS
DESCRIPTION OF ALTERATIONS:

NY 78, TRANSIT ROAD, S.H. 1334A-1
FRENCH ROAD TO WEHRLE DRIVE
TOWNS OF CHEEKTOWAGA & LANCASTER
VILLAGE OF DEPEW
COUNTY: ERIE REGION: 05

PIN 5813.61
NY 78

BRIDGES

CULVERTS

ALL DIMENSIONS IN ft UNLESS OTHERWISE NOTED

CURB RAMP / ADA PLANS
NE & SE - TRANSIT & PLEASANTVIEW

CONTRACT NUMBER
D264571

DRAWING NO. CRP-10
SHEET NO. 235

IT IS A VIOLATION OF LAW FOR ANY PERSON, UNLESS THEY ARE ACTING UNDER THE DIRECTION OF A LICENSED PROFESSIONAL ENGINEER, ARCHITECT, LANDSCAPE ARCHITECT, OR LAND SURVEYOR, TO ALTER AN ITEM IN ANY WAY. IF AN ITEM BEARING THE STAMP OF A LICENSED PROFESSIONAL IS ALTERED, THE ALTERING ENGINEER, ARCHITECT, LANDSCAPE ARCHITECT, OR LAND SURVEYOR SHALL STAMP THE DOCUMENT AND INCLUDE THE NOTATION "ALTERED BY" FOLLOWED BY THEIR SIGNATURE, THE DATE OF SUCH ALTERATION, AND A SPECIFIC DESCRIPTION OF THE ALTERATION.

NEW YORK STATE OF OPPORTUNITY. Department of Transportation

DESIGN SUPERVISOR S. S. VAIDYA
JOB MANAGER R. F. SCHALLER
DESIGN H. M. BELACHEW
CHECK R. F. SCHALLER
DRAFTING H. M. BELACHEW
CHECK R. F. SCHALLER
PROJECT MANAGER S. S. VAIDYA

FILE NAME = 581361_CPH.HWY.CRP-10.dgn
DATE/TIME = 22-JUN-2021 12:44
USER = corites

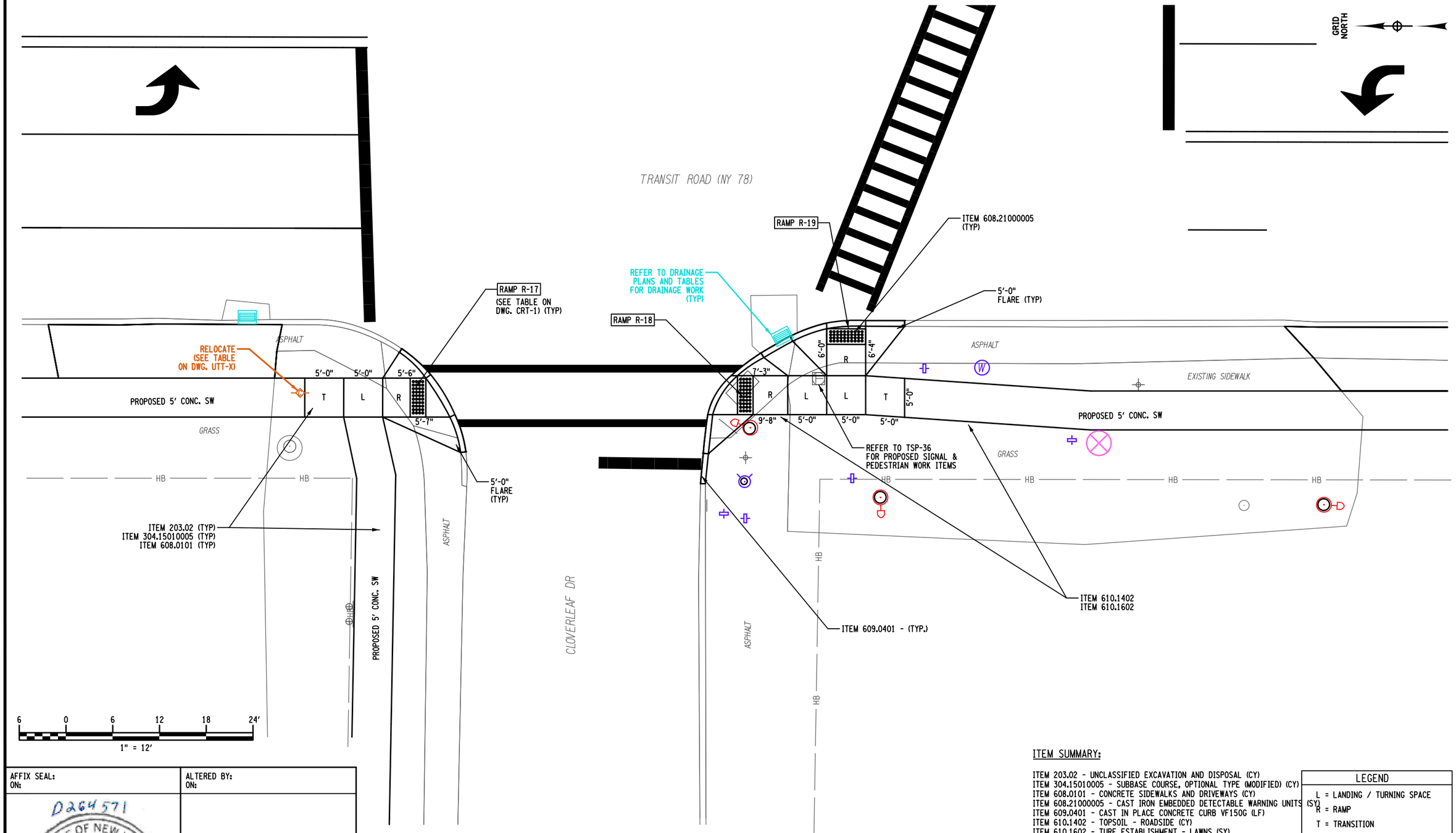

ITEM SUMMARY:

ITEM 203.02 - UNCLASSIFIED EXCAVATION AND DISPOSAL (CY)
ITEM 304.15010005 - SUBBASE COURSE, OPTIONAL TYPE (MODIFIED) (CY)
ITEM 608.0101 - CONCRETE SIDEWALKS AND DRIVEWAYS (CY)
ITEM 608.21000005 - CAST IRON EMBEDDED DETECTABLE WARNING UNITS (SY)
ITEM 609.0401 - CAST IN PLACE CONCRETE CURB VF150G (LF)
ITEM 610.1402 - TOPSOIL - ROADSIDE (CY)
ITEM 610.1602 - TURF ESTABLISHMENT - LAWNS (SY)

LEGEND
L = LANDING / TURNING SPACE
R = RAMP
T = TRANSITION
SW = SIDEWALK

AFFIX SEAL:
ON:

ALTERED BY:
ON:

D264571
STATE OF NEW YORK
ROBERT F. SCHALLER
NO. 082465
LICENSED PROFESSIONAL ENGINEER

AS-BUILT REVISIONS
DESCRIPTION OF ALTERATIONS:

NY 78, TRANSIT ROAD, S.H. 1334A-1
FRENCH ROAD TO WEHRLE DRIVE
TOWNS OF CHEEKTOWAGA & LANCASTER
VILLAGE OF DEPEW
COUNTY: ERIE REGION: 05

PIN 5813.61
NY 78

BRIDGES

CULVERTS

ALL DIMENSIONS IN ft UNLESS OTHERWISE NOTED

CURB RAMP / ADA PLANS
NE & SE - TRANSIT & PLEASANTVIEW

CONTRACT NUMBER
D264571

DRAWING NO. CRP-11
SHEET NO. 236

IT IS A VIOLATION OF LAW FOR ANY PERSON, UNLESS THEY ARE ACTING UNDER THE DIRECTION OF A LICENSED PROFESSIONAL ENGINEER, ARCHITECT, LANDSCAPE ARCHITECT, OR LAND SURVEYOR, TO ALTER AN ITEM IN ANY WAY. IF AN ITEM BEARING THE STAMP OF A LICENSED PROFESSIONAL IS ALTERED, THE ALTERING ENGINEER, ARCHITECT, LANDSCAPE ARCHITECT, OR LAND SURVEYOR SHALL STAMP THE DOCUMENT AND INCLUDE THE NOTATION "ALTERED BY" FOLLOWED BY THEIR SIGNATURE, THE DATE OF SUCH ALTERATION, AND A SPECIFIC DESCRIPTION OF THE ALTERATION.

NEW YORK STATE OF OPPORTUNITY. Department of Transportation

PROJECT MANAGER S. S. VAIDYA
CHECK R. F. SCHALLER
DRAFTING H. M. BELACHEW
CHECK R. F. SCHALLER
DESIGN H. M. BELACHEW
CHECK R. F. SCHALLER
JOB MANAGER R. F. SCHALLER
DESIGN SUPERVISOR S. S. VAIDYA

FILE NAME = 581361_CPH_HWY_CRP-11.dgn
DATE/TIME = 22-JUN-2021 12:44
USER = corrtes

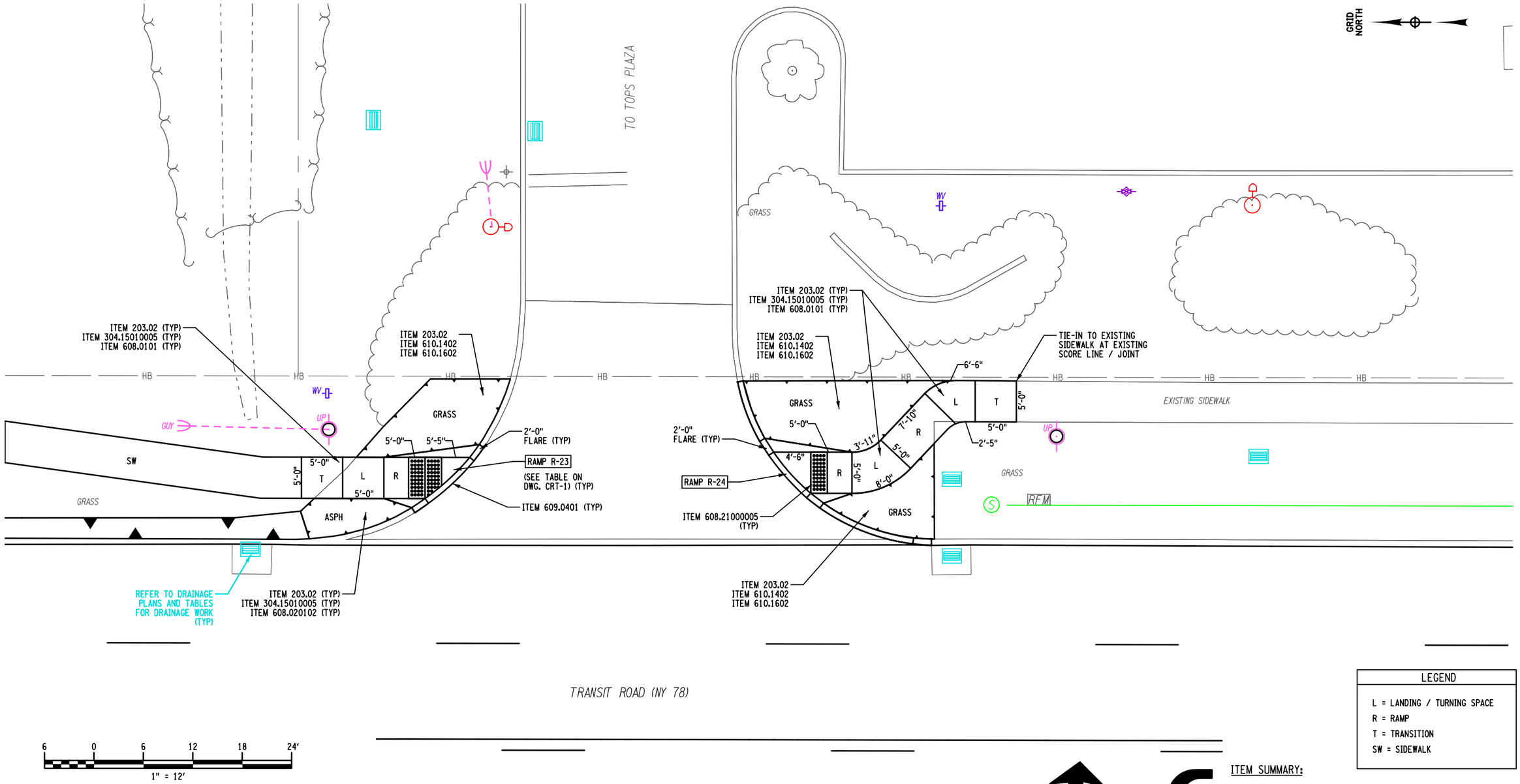

LEGEND

L = LANDING / TURNING SPACE
R = RAMP
T = TRANSITION
SW = SIDEWALK

ITEM SUMMARY:

ITEM 203.02 - UNCLASSIFIED EXCAVATION AND DISPOSAL (CY)
ITEM 304.15010005 - SUBBASE COURSE, OPTIONAL TYPE (MODIFIED) (CY)
ITEM 608.0101 - CONCRETE SIDEWALKS AND DRIVEWAYS (CY)
ITEM 608.020102 - HMA SIDEWALKS, DRIVEWAYS, BIKE PATHS & VEGETATION CONTROL STRIPS (TON)
ITEM 608.21000005 - CAST IRON EMBEDDED DETECTABLE WARNING UNITS (SY)
ITEM 609.0401 - CAST IN PLACE CONCRETE CURB VF150G (LF)
ITEM 610.1402 - TOPSOIL - ROADSIDE (CY)
ITEM 610.1602 - TURF ESTABLISHMENT - LAWNS (SY)

AFFIX SEAL:
ON:

ALTERED BY:
ON:

D264571
STATE OF NEW YORK
ROBERT F. SCHALLER
LICENSED PROFESSIONAL ENGINEER
NO. 082465

AS-BUILT REVISIONS
DESCRIPTION OF ALTERATIONS:

NY 78, TRANSIT ROAD, S.H. 1334A-1
FRENCH ROAD TO WEHRLE DRIVE
TOWNS OF CHEEKTOWAGA & LANCASTER
VILLAGE OF DEPEW
COUNTY: ERIE REGION: 05

PIN 5813.61
NY 78

BRIDGES

CULVERTS

ALL DIMENSIONS IN ft UNLESS OTHERWISE NOTED

CURB RAMP / ADA PLANS
NE & SE - TRANSIT & TOPS PLAZA
NORTH

CONTRACT NUMBER
D264571

DRAWING NO. CRP-12
SHEET NO. 237

IT IS A VIOLATION OF LAW FOR ANY PERSON, UNLESS THEY ARE ACTING UNDER THE DIRECTION OF A LICENSED PROFESSIONAL ENGINEER, ARCHITECT, LANDSCAPE ARCHITECT, OR LAND SURVEYOR, TO ALTER AN ITEM IN ANY WAY. IF AN ITEM BEARING THE STAMP OF A LICENSED PROFESSIONAL IS ALTERED, THE ALTERING ENGINEER, ARCHITECT, LANDSCAPE ARCHITECT, OR LAND SURVEYOR SHALL STAMP THE DOCUMENT AND INCLUDE THE NOTATION "ALTERED BY" FOLLOWED BY THEIR SIGNATURE, THE DATE OF SUCH ALTERATION, AND A SPECIFIC DESCRIPTION OF THE ALTERATION.

NEW YORK STATE OF OPPORTUNITY. Department of Transportation

PROJECT MANAGER S. S. VAIDYA
CHECK R. F. SCHALLER
DRAFTING H. M. BELACHEW
CHECK R. F. SCHALLER
DESIGN H. M. BELACHEW
JOB MANAGER R. F. SCHALLER
DESIGN SUPERVISOR S. S. VAIDYA
FILE NAME = 581361_CPH_HWY_CRP-12.dgn
DATE/TIME = 22-JUN-2021 12:44
USER = cortes

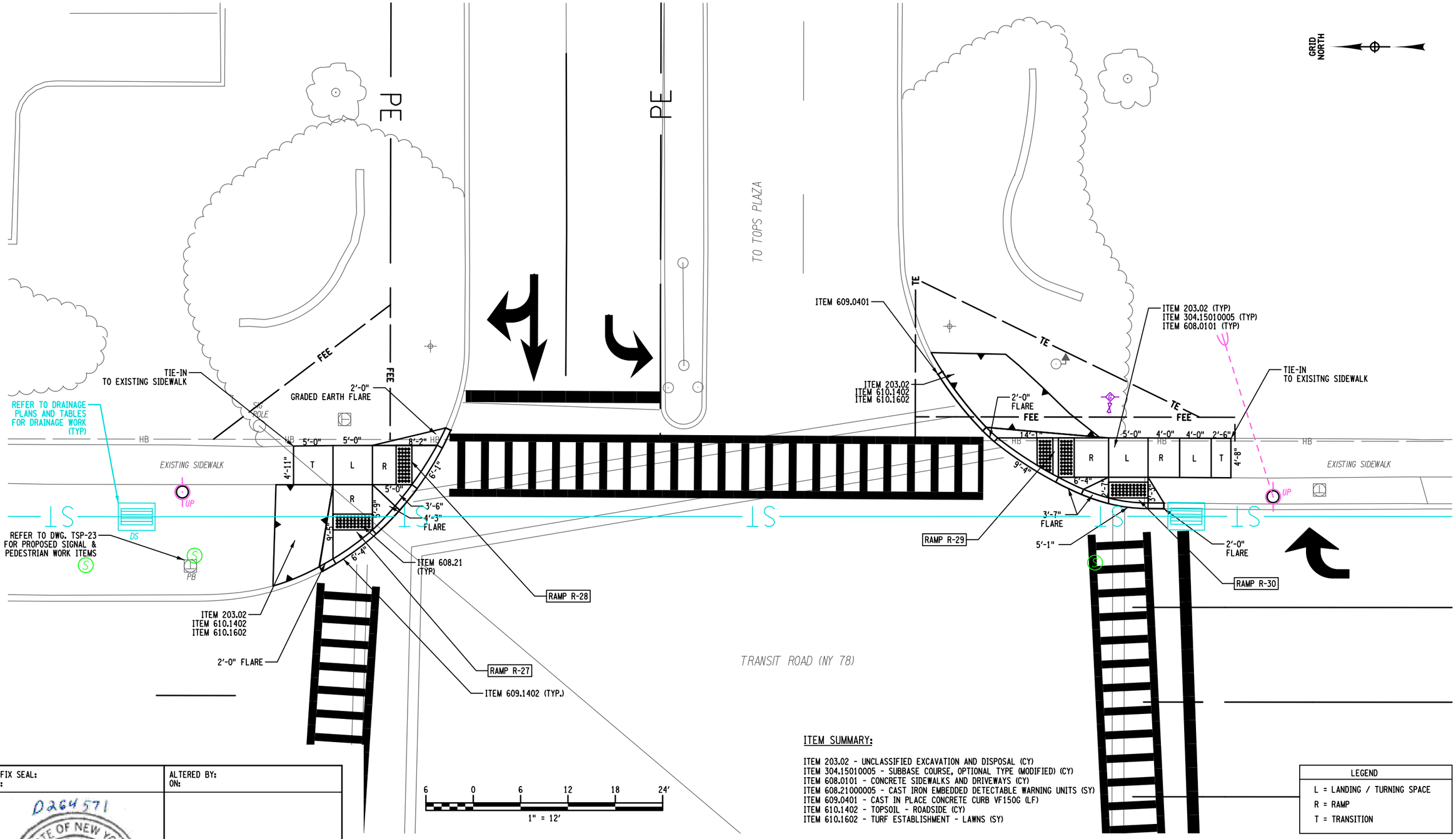

ITEM SUMMARY:

ITEM 203.02 - UNCLASSIFIED EXCAVATION AND DISPOSAL (CY)
ITEM 304.15010005 - SUBBASE COURSE, OPTIONAL TYPE (MODIFIED) (CY)
ITEM 608.0101 - CONCRETE SIDEWALKS AND DRIVEWAYS (CY)
ITEM 608.21000005 - CAST IRON EMBEDDED DETECTABLE WARNING UNITS (SY)
ITEM 609.0401 - CAST IN PLACE CONCRETE CURB VF150G (LF)
ITEM 610.1402 - TOPSOIL - ROADSIDE (CY)
ITEM 610.1602 - TURF ESTABLISHMENT - LAWNS (SY)

LEGEND
L = LANDING / TURNING SPACE
R = RAMP
T = TRANSITION

AFFIX SEAL:
ON:

D264571
STATE OF NEW YORK
ROBERT F. SCHALLER
NO. 082465
LICENSED PROFESSIONAL ENGINEER

ALTERED BY:
ON:

AS-BUILT REVISIONS
DESCRIPTION OF ALTERATIONS:

NY 78, TRANSIT ROAD, S.H. 1334A-1
FRENCH ROAD TO WEHRLE DRIVE
TOWNS OF CHEEKTOWAGA & LANCASTER
VILLAGE OF DEPEW
COUNTY: ERIE REGION: 05

PIN 5813.61
NY 78

BRIDGES

CULVERTS

ALL DIMENSIONS IN ft UNLESS OTHERWISE NOTED

CURB RAMP / ADA PLANS
NE & SE - TRANSIT & TOPS PLAZA
SOUTH

CONTRACT NUMBER
D264571

DRAWING NO. CRP-13
SHEET NO. 238

IT IS A VIOLATION OF LAW FOR ANY PERSON, UNLESS THEY ARE ACTING UNDER THE DIRECTION OF A LICENSED PROFESSIONAL ENGINEER, ARCHITECT, LANDSCAPE ARCHITECT, OR LAND SURVEYOR, TO ALTER AN ITEM IN ANY WAY. IF AN ITEM BEARING THE STAMP OF A LICENSED PROFESSIONAL IS ALTERED, THE ALTERING ENGINEER, ARCHITECT, LANDSCAPE ARCHITECT, OR LAND SURVEYOR SHALL STAMP THE DOCUMENT AND INCLUDE THE NOTATION "ALTERED BY" FOLLOWED BY THEIR SIGNATURE, THE DATE OF SUCH ALTERATION, AND A SPECIFIC DESCRIPTION OF THE ALTERATION.

NEW YORK STATE OF OPPORTUNITY. Department of Transportation

DESIGN SUPERVISOR S. S. VAIDYA
JOB MANAGER R. F. SCHALLER
DESIGN H. M. BELACHEW
CHECK R. F. SCHALLER
DRAFTING H. M. BELACHEW
CHECK R. F. SCHALLER
PROJECT MANAGER S. S. VAIDYA

FILE NAME = 581361_CPH_HWY_CRP-13.dgn
DATE/TIME = 22-JUN-2021 12:44
USER = corites

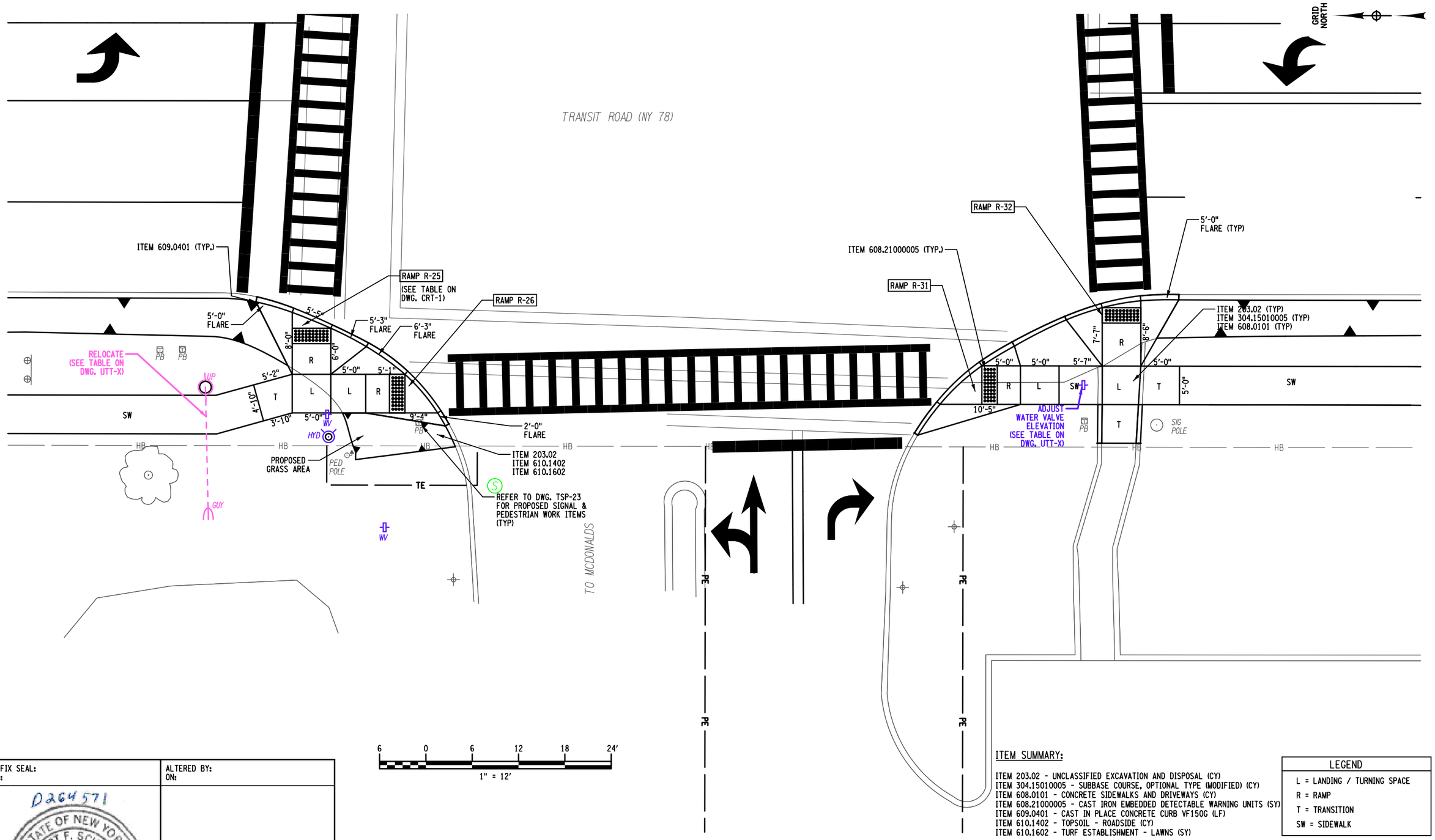

ITEM SUMMARY:

ITEM 203.02 - UNCLASSIFIED EXCAVATION AND DISPOSAL (CY)
ITEM 304.15010005 - SUBBASE COURSE, OPTIONAL TYPE (MODIFIED) (CY)
ITEM 608.0101 - CONCRETE SIDEWALKS AND DRIVEWAYS (CY)
ITEM 608.21000005 - CAST IRON EMBEDDED DETECTABLE WARNING UNITS (SY)
ITEM 609.0401 - CAST IN PLACE CONCRETE CURB VF150G (LF)
ITEM 610.1402 - TOPSOIL - ROADSIDE (CY)
ITEM 610.1602 - TURF ESTABLISHMENT - LAWNS (SY)

LEGEND
L = LANDING / TURNING SPACE
R = RAMP
T = TRANSITION
SW = SIDEWALK

AFFIX SEAL:
ON:

D264571

STATE OF NEW YORK
ROBERT F. SCHALLER
NO. 082465
LICENSED PROFESSIONAL ENGINEER

ALTERED BY:
ON:

AS-BUILT REVISIONS
DESCRIPTION OF ALTERATIONS:

NY 78, TRANSIT ROAD, S.H. 1334A-1	PIN 5813.61	BRIDGES	CULVERTS	ALL DIMENSIONS IN ft UNLESS OTHERWISE NOTED
FRENCH ROAD TO WEHRLE DRIVE	NY 78			CURB RAMP / ADA PLANS
TOWNS OF CHEEKTOWAGA & LANCASTER				NW & SW - TRANSIT & MCDONALDS
VILLAGE OF DEPEW				
COUNTY: ERIE REGION: 05				

CONTRACT NUMBER
D264571

DRAWING NO. CRP-14
SHEET NO. 239

IT IS A VIOLATION OF LAW FOR ANY PERSON, UNLESS THEY ARE ACTING UNDER THE DIRECTION OF A LICENSED PROFESSIONAL ENGINEER, ARCHITECT, LANDSCAPE ARCHITECT, OR LAND SURVEYOR, TO ALTER AN ITEM IN ANY WAY. IF AN ITEM BEARING THE STAMP OF A LICENSED PROFESSIONAL IS ALTERED, THE ALTERING ENGINEER, ARCHITECT, LANDSCAPE ARCHITECT, OR LAND SURVEYOR SHALL STAMP THE DOCUMENT AND INCLUDE THE NOTATION "ALTERED BY" FOLLOWED BY THEIR SIGNATURE, THE DATE OF SUCH ALTERATION, AND A SPECIFIC DESCRIPTION OF THE ALTERATION.

NEW YORK STATE OF OPPORTUNITY. Department of Transportation

DESIGN SUPERVISOR S. S. VAIDYA | JOB MANAGER R. F. SCHALLER | DESIGN H. M. BELACHEW | CHECK R. F. SCHALLER | DRAFTING H. M. BELACHEW | CHECK R. F. SCHALLER | PROJECT MANAGER S. S. VAIDYA

FILE NAME = 581361_CPH_HWY_CRP-14.dgn
DATE/TIME = 22-JUN-2021 12:44
USER = corites

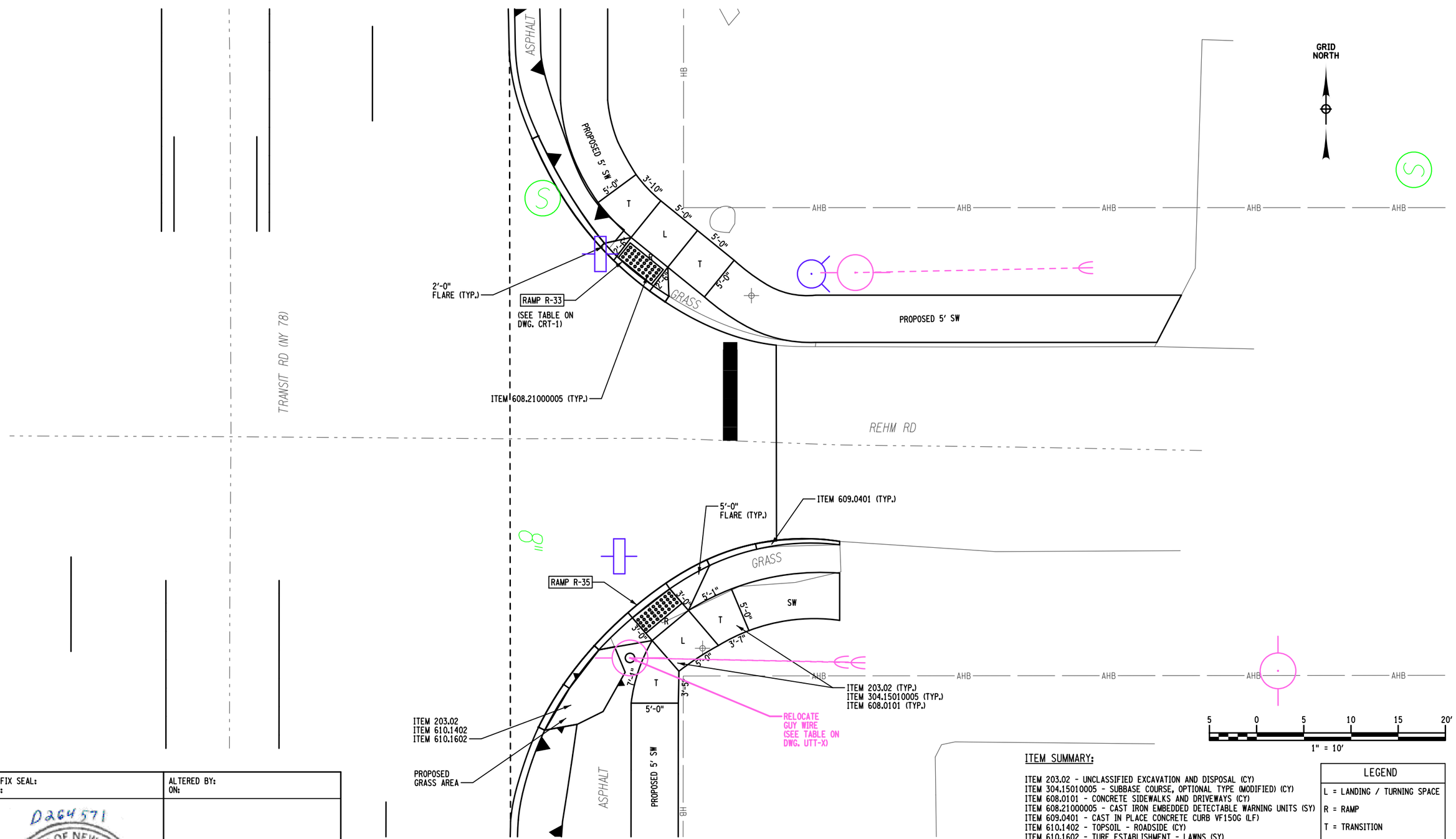

ITEM SUMMARY:

ITEM 203.02 - UNCLASSIFIED EXCAVATION AND DISPOSAL (CY)
ITEM 304.15010005 - SUBBASE COURSE, OPTIONAL TYPE (MODIFIED) (CY)
ITEM 608.0101 - CONCRETE SIDEWALKS AND DRIVEWAYS (CY)
ITEM 608.21000005 - CAST IRON EMBEDDED DETECTABLE WARNING UNITS (SY)
ITEM 609.0401 - CAST IN PLACE CONCRETE CURB VF150G (LF)
ITEM 610.1402 - TOPSOIL - ROADSIDE (CY)
ITEM 610.1602 - TURF ESTABLISHMENT - LAWNS (SY)

LEGEND
L = LANDING / TURNING SPACE
R = RAMP
T = TRANSITION
SW = SIDEWALK

AFFIX SEAL:
ON:

D264571
STATE OF NEW YORK
ROBERT F. SCHALLER
NO. 082465
LICENSED PROFESSIONAL ENGINEER

ALTERED BY:
ON:

AS-BUILT REVISIONS
DESCRIPTION OF ALTERATIONS:

NY 78, TRANSIT ROAD, S.H. 1334A-1	PIN 5813.61	BRIDGES	CULVERTS	ALL DIMENSIONS IN ft UNLESS OTHERWISE NOTED	CONTRACT NUMBER
FRENCH ROAD TO WEHRLE DRIVE	NY 78			CURB RAMP / ADA PLANS	D264571
TOWNS OF CHEEKTOWAGA & LANCASTER				NE & SE TRANSIT AND REHM RD	
VILLAGE OF DEPEW					DRAWING NO. CRP-15
COUNTY: ERIE REGION: 05					SHEET NO. 240

IT IS A VIOLATION OF LAW FOR ANY PERSON, UNLESS THEY ARE ACTING UNDER THE DIRECTION OF A LICENSED PROFESSIONAL ENGINEER, ARCHITECT, LANDSCAPE ARCHITECT, OR LAND SURVEYOR, TO ALTER AN ITEM IN ANY WAY. IF AN ITEM BEARING THE STAMP OF A LICENSED PROFESSIONAL IS ALTERED, THE ALTERING ENGINEER, ARCHITECT, LANDSCAPE ARCHITECT, OR LAND SURVEYOR SHALL STAMP THE DOCUMENT AND INCLUDE THE NOTATION "ALTERED BY" FOLLOWED BY THEIR SIGNATURE, THE DATE OF SUCH ALTERATION, AND A SPECIFIC DESCRIPTION OF THE ALTERATION.

NEW YORK STATE OF OPPORTUNITY. Department of Transportation

DESIGN SUPERVISOR S. S. VAIDYA
JOB MANAGER R. F. SCHALLER
DESIGN H. M. BELACHEW
CHECK R. F. SCHALLER
DRAFTING H. M. BELACHEW
CHECK R. F. SCHALLER
PROJECT MANAGER S. S. VAIDYA

FILE NAME = 581361_CPH_HWY_CRP-15.dgn
DATE/TIME = 22-JUN-2021 12:44
USER = cortes

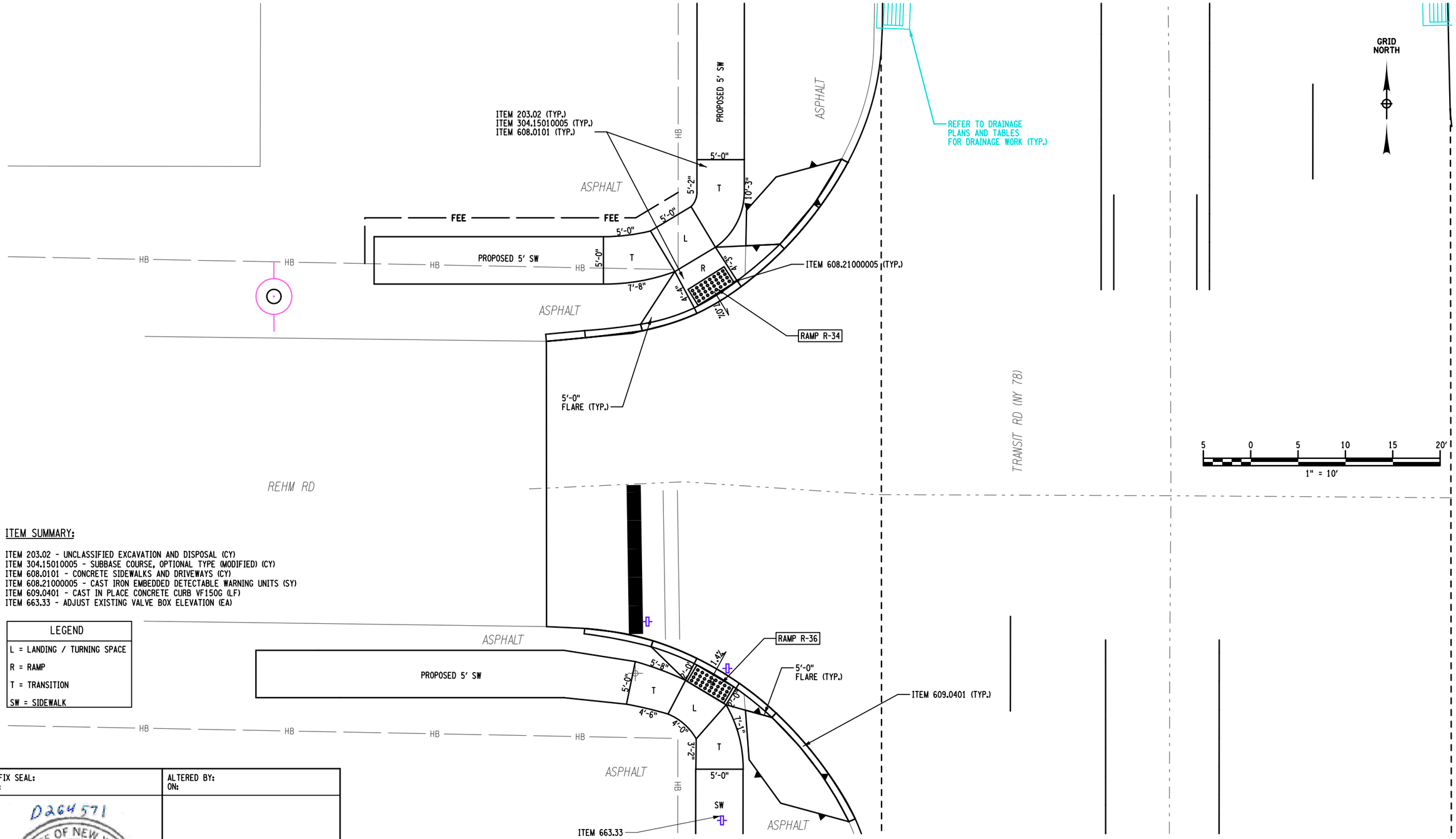

ITEM SUMMARY:

ITEM 203.02 - UNCLASSIFIED EXCAVATION AND DISPOSAL (CY)
ITEM 304.15010005 - SUBBASE COURSE, OPTIONAL TYPE (MODIFIED) (CY)
ITEM 608.0101 - CONCRETE SIDEWALKS AND DRIVEWAYS (CY)
ITEM 608.21000005 - CAST IRON EMBEDDED DETECTABLE WARNING UNITS (SY)
ITEM 609.0401 - CAST IN PLACE CONCRETE CURB VF150G (LF)
ITEM 663.33 - ADJUST EXISTING VALVE BOX ELEVATION (EA)

LEGEND
L = LANDING / TURNING SPACE
R = RAMP
T = TRANSITION
SW = SIDEWALK

AFFIX SEAL:
ON:

ALTERED BY:
ON:

D264571
STATE OF NEW YORK
ROBERT F. SCHALLER
NO. 082465
LICENSED PROFESSIONAL ENGINEER

AS-BUILT REVISIONS
DESCRIPTION OF ALTERATIONS:

NY 78, TRANSIT ROAD, S.H. 1334A-1
FRENCH ROAD TO WEHRLE DRIVE
TOWNS OF CHEEKTOWAGA & LANCASTER
VILLAGE OF DEPEW
COUNTY: ERIE REGION: 05

PIN 5813.61
NY 78

BRIDGES

CULVERTS

ALL DIMENSIONS IN ft UNLESS OTHERWISE NOTED

CURB RAMP / ADA PLANS
NW & SW TRANSIT AND REHM RD

CONTRACT NUMBER
D264571

DRAWING NO. CRP-16
SHEET NO. 241

IT IS A VIOLATION OF LAW FOR ANY PERSON, UNLESS THEY ARE ACTING UNDER THE DIRECTION OF A LICENSED PROFESSIONAL ENGINEER, ARCHITECT, LANDSCAPE ARCHITECT, OR LAND SURVEYOR, TO ALTER AN ITEM IN ANY WAY. IF AN ITEM BEARING THE STAMP OF A LICENSED PROFESSIONAL IS ALTERED, THE ALTERING ENGINEER, ARCHITECT, LANDSCAPE ARCHITECT, OR LAND SURVEYOR SHALL STAMP THE DOCUMENT AND INCLUDE THE NOTATION "ALTERED BY" FOLLOWED BY THEIR SIGNATURE, THE DATE OF SUCH ALTERATION, AND A SPECIFIC DESCRIPTION OF THE ALTERATION.

NEW YORK STATE OF OPPORTUNITY. Department of Transportation

PROJECT MANAGER S. S. VAIDYA
CHECK R. F. SCHALLER
DRAFTING H. M. BELACHEW
CHECK R. F. SCHALLER
DESIGN H. M. BELACHEW
JOB MANAGER R. F. SCHALLER
DESIGN SUPERVISOR S. S. VAIDYA

FILE NAME = 581361_CPH_HWY_CRP-16.dgn
DATE/TIME = 22-JUN-2021 12:44
USER = cortes

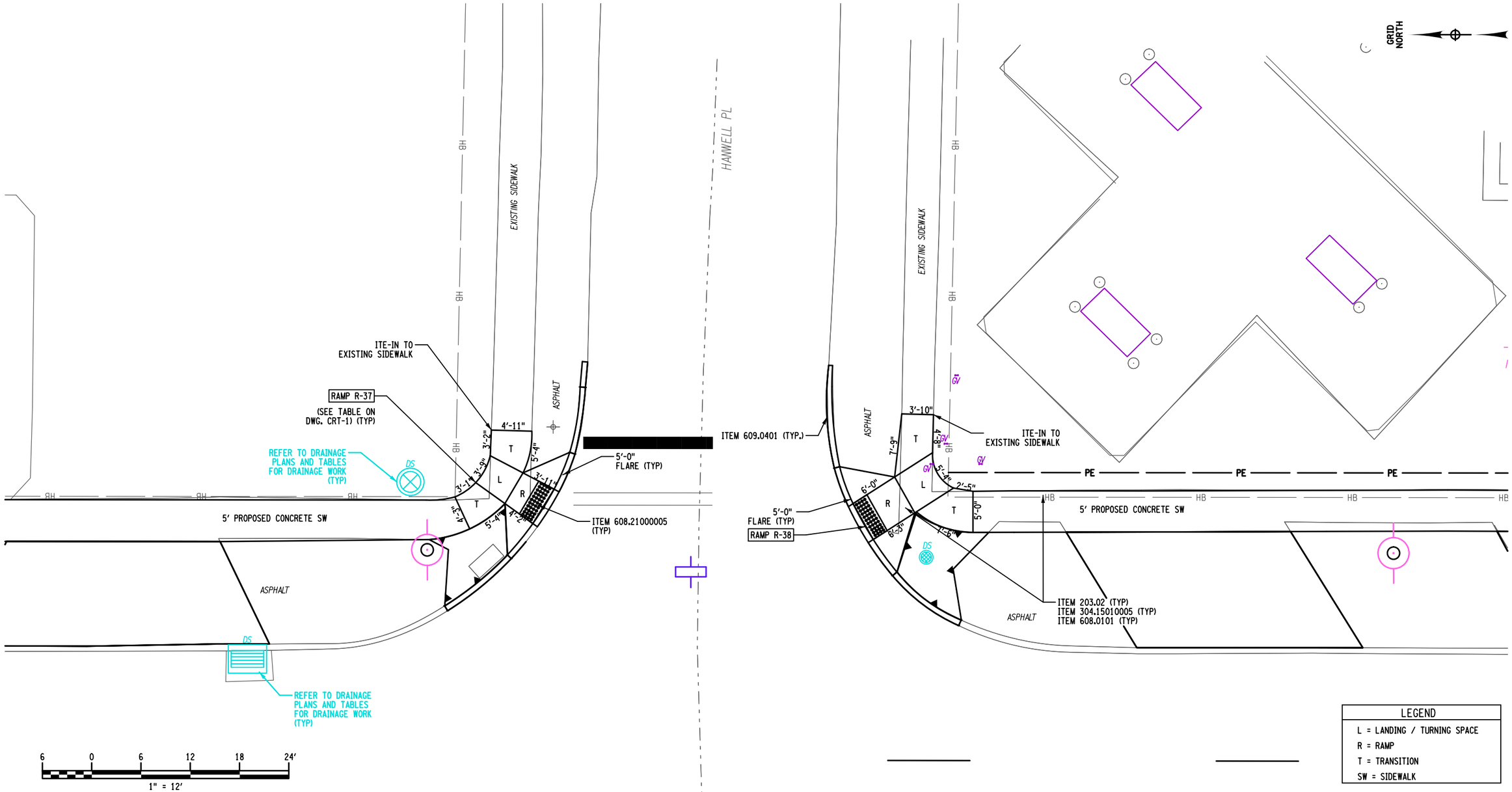

LEGEND
L = LANDING / TURNING SPACE
R = RAMP
T = TRANSITION
SW = SIDEWALK

ITEM SUMMARY:

ITEM 203.02 - UNCLASSIFIED EXCAVATION AND DISPOSAL (CY)
ITEM 304.15010005 - SUBBASE COURSE, OPTIONAL TYPE (MODIDIED) (CY)
ITEM 608.0101 - CONCRETE SIDEWALKS AND DRIVEWAYS (CY)
ITEM 608.21000005 - CAST IRON EMBEDDED DETECTABLE WARNING UNITS (SY)
ITEM 609.0401 - CAST IN PLACE CONCRETE CURB VF150G (LF)

AFFIX SEAL:
ON:

D264571
STATE OF NEW YORK
ROBERT F. SCHALLER
LICENSED PROFESSIONAL ENGINEER
NO. 082465

ALTERED BY:
ON:

AS-BUILT REVISIONS
DESCRIPTION OF ALTERATIONS:

NY 78, TRANSIT ROAD, S.H. 1334A-1	PIN 5813.61	BRIDGES	CULVERTS	ALL DIMENSIONS IN ft UNLESS OTHERWISE NOTED	CONTRACT NUMBER
FRENCH ROAD TO WEHRLE DRIVE	NY 78			CURB RAMP / ADA PLANS	D264571
TOWNS OF CHEEKTOWAGA & LANCASTER				NE & SE TRANSIT AND HANWELL	
VILLAGE OF DEPEW					DRAWING NO. CRP-17
COUNTY: ERIE REGION: 05					SHEET NO. 242

IT IS A VIOLATION OF LAW FOR ANY PERSON, UNLESS THEY ARE ACTING UNDER THE DIRECTION OF A LICENSED PROFESSIONAL ENGINEER, ARCHITECT, LANDSCAPE ARCHITECT, OR LAND SURVEYOR, TO ALTER AN ITEM IN ANY WAY. IF AN ITEM BEARING THE STAMP OF A LICENSED PROFESSIONAL IS ALTERED, THE ALTERING ENGINEER, ARCHITECT, LANDSCAPE ARCHITECT, OR LAND SURVEYOR SHALL STAMP THE DOCUMENT AND INCLUDE THE NOTATION "ALTERED BY" FOLLOWED BY THEIR SIGNATURE, THE DATE OF SUCH ALTERATION, AND A SPECIFIC DESCRIPTION OF THE ALTERATION.

NEW YORK STATE OF OPPORTUNITY. Department of Transportation

PROJECT MANAGER S. S. VAIDYA
CHECK R. F. SCHALLER
DRAFTING H. M. BELACHEW
CHECK R. F. SCHALLER
DESIGN H. M. BELACHEW
CHECK R. F. SCHALLER
JOB MANAGER R. F. SCHALLER
DESIGN SUPERVISOR S. S. VAIDYA
FILE NAME = 581361_CPH_HWY_CRP-17.dgn
DATE/TIME = 22-JUN-2021 12:44
USER = ccrtes

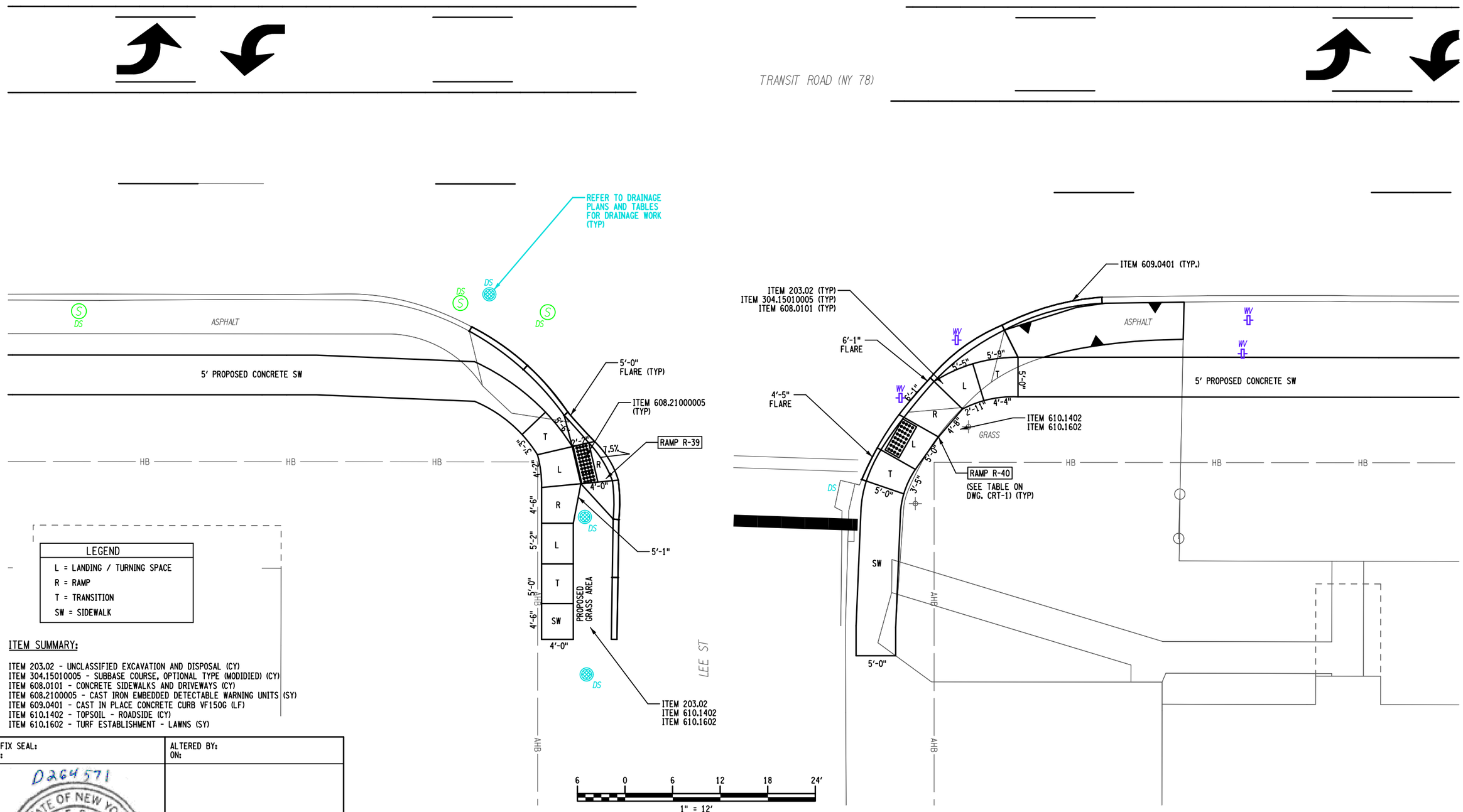

LEGEND
L = LANDING / TURNING SPACE
R = RAMP
T = TRANSITION
SW = SIDEWALK

ITEM SUMMARY:

ITEM 203.02 - UNCLASSIFIED EXCAVATION AND DISPOSAL (CY)
ITEM 304.15010005 - SUBBASE COURSE, OPTIONAL TYPE (MODIDIED) (CY)
ITEM 608.0101 - CONCRETE SIDEWALKS AND DRIVEWAYS (CY)
ITEM 608.2100005 - CAST IRON EMBEDDED DETECTABLE WARNING UNITS (SY)
ITEM 609.0401 - CAST IN PLACE CONCRETE CURB VF150G (LF)
ITEM 610.1402 - TOPSOIL - ROADSIDE (CY)
ITEM 610.1602 - TURF ESTABLISHMENT - LAWNS (SY)

AFFIX SEAL:
ON:

ALTERED BY:
ON:

D264571
STATE OF NEW YORK
ROBERT F. SCHALLER
NO. 082465
LICENSED PROFESSIONAL ENGINEER

AS-BUILT REVISIONS
DESCRIPTION OF ALTERATIONS:

NY 78, TRANSIT ROAD, S.H. 1334A-1
FRENCH ROAD TO WEHRLE DRIVE
TOWNS OF CHEEKTOWAGA & LANCASTER
VILLAGE OF DEPEW
COUNTY: ERIE REGION: 05

PIN 5813.61
NY 78

BRIDGES

CULVERTS

ALL DIMENSIONS IN ft UNLESS OTHERWISE NOTED

CURB RAMP / ADA PLANS
NW & SW - TRANSIT & LEE ST.

CONTRACT NUMBER
D264571

DRAWING NO. CRP-18
SHEET NO. 243

IT IS A VIOLATION OF LAW FOR ANY PERSON, UNLESS THEY ARE ACTING UNDER THE DIRECTION OF A LICENSED PROFESSIONAL ENGINEER, ARCHITECT, LANDSCAPE ARCHITECT, OR LAND SURVEYOR, TO ALTER AN ITEM IN ANY WAY. IF AN ITEM BEARING THE STAMP OF A LICENSED PROFESSIONAL IS ALTERED, THE ALTERING ENGINEER, ARCHITECT, LANDSCAPE ARCHITECT, OR LAND SURVEYOR SHALL STAMP THE DOCUMENT AND INCLUDE THE NOTATION "ALTERED BY" FOLLOWED BY THEIR SIGNATURE, THE DATE OF SUCH ALTERATION, AND A SPECIFIC DESCRIPTION OF THE ALTERATION.

NEW YORK STATE OF OPPORTUNITY. Department of Transportation

DESIGN SUPERVISOR S. S. VAIDYA
JOB MANAGER R. F. SCHALLER
DESIGN H. M. BELACHEW
CHECK R. F. SCHALLER
DRAFTING H. M. BELACHEW
CHECK R. F. SCHALLER
PROJECT MANAGER S. S. VAIDYA

FILE NAME = 581361_CPH_HWY_CRP-18.dgn
DATE/TIME = 22-JUN-2021 12:44
USER = ocrites

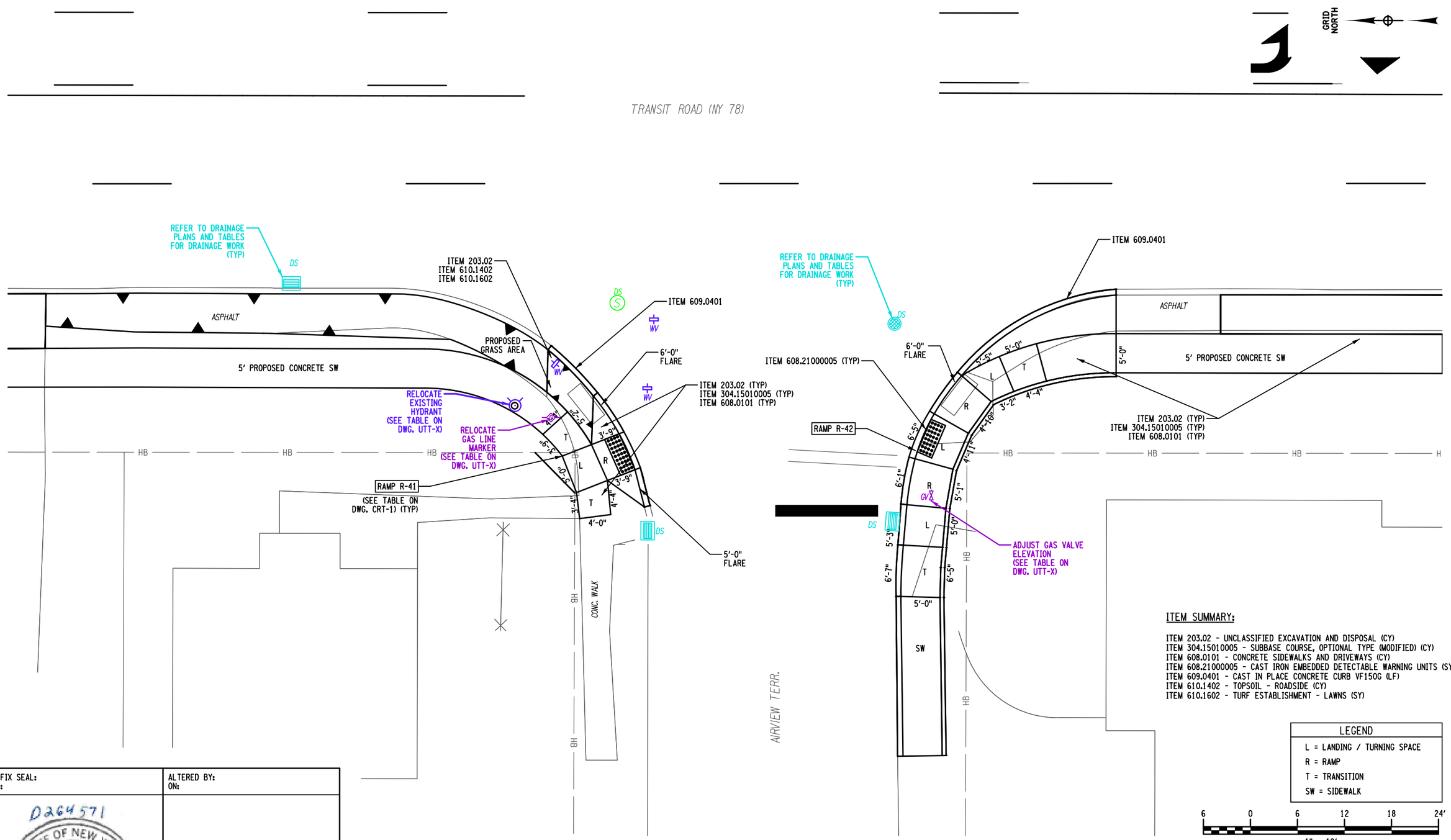

ITEM SUMMARY:

ITEM 203.02 - UNCLASSIFIED EXCAVATION AND DISPOSAL (CY)
ITEM 304.15010005 - SUBBASE COURSE, OPTIONAL TYPE (MODIFIED) (CY)
ITEM 608.0101 - CONCRETE SIDEWALKS AND DRIVEWAYS (CY)
ITEM 608.21000005 - CAST IRON EMBEDDED DETECTABLE WARNING UNITS (SY)
ITEM 609.0401 - CAST IN PLACE CONCRETE CURB VF150G (LF)
ITEM 610.1402 - TOPSOIL - ROADSIDE (CY)
ITEM 610.1602 - TURF ESTABLISHMENT - LAWNS (SY)

LEGEND
L = LANDING / TURNING SPACE
R = RAMP
T = TRANSITION
SW = SIDEWALK

6 0 6 12 18 24'
1" = 12'

AFFIX SEAL:
ON:

ALTERED BY:
ON:

D264571
STATE OF NEW YORK
ROBERT F. SCHALLER
NO. 082465
LICENSED PROFESSIONAL ENGINEER

AS-BUILT REVISIONS
DESCRIPTION OF ALTERATIONS:

NY 78, TRANSIT ROAD, S.H. 1334A-1
FRENCH ROAD TO WEHRLE DRIVE
TOWNS OF CHEEKTOWAGA & LANCASTER
VILLAGE OF DEPEW
COUNTY: ERIE REGION: 05

PIN 5813.61
NY 78

BRIDGES

CULVERTS

ALL DIMENSIONS IN ft UNLESS OTHERWISE NOTED

CURB RAMP / ADA PLANS
NW & SW - TRANSIT & AIRVIEW TERR.

CONTRACT NUMBER
D264571

DRAWING NO. CRP-19
SHEET NO. 244

IT IS A VIOLATION OF LAW FOR ANY PERSON, UNLESS THEY ARE ACTING UNDER THE DIRECTION OF A LICENSED PROFESSIONAL ENGINEER, ARCHITECT, LANDSCAPE ARCHITECT, OR LAND SURVEYOR, TO ALTER AN ITEM IN ANY WAY. IF AN ITEM BEARING THE STAMP OF A LICENSED PROFESSIONAL IS ALTERED, THE ALTERING ENGINEER, ARCHITECT, LANDSCAPE ARCHITECT, OR LAND SURVEYOR SHALL STAMP THE DOCUMENT AND INCLUDE THE NOTATION "ALTERED BY" FOLLOWED BY THEIR SIGNATURE, THE DATE OF SUCH ALTERATION, AND A SPECIFIC DESCRIPTION OF THE ALTERATION.

NEW YORK STATE OF OPPORTUNITY. Department of Transportation

PROJECT MANAGER S. S. VAIDYA
CHECK R. F. SCHALLER
DRAFTING H. M. BELACHEW
DESIGN H. M. BELACHEW
JOB MANAGER R. F. SCHALLER
DESIGN SUPERVISOR S. S. VAIDYA
FILE NAME = 581361_CPH_HWY_CRP-19.dgn
DATE/TIME = 22-JUN-2021 12:44
USER = cortes

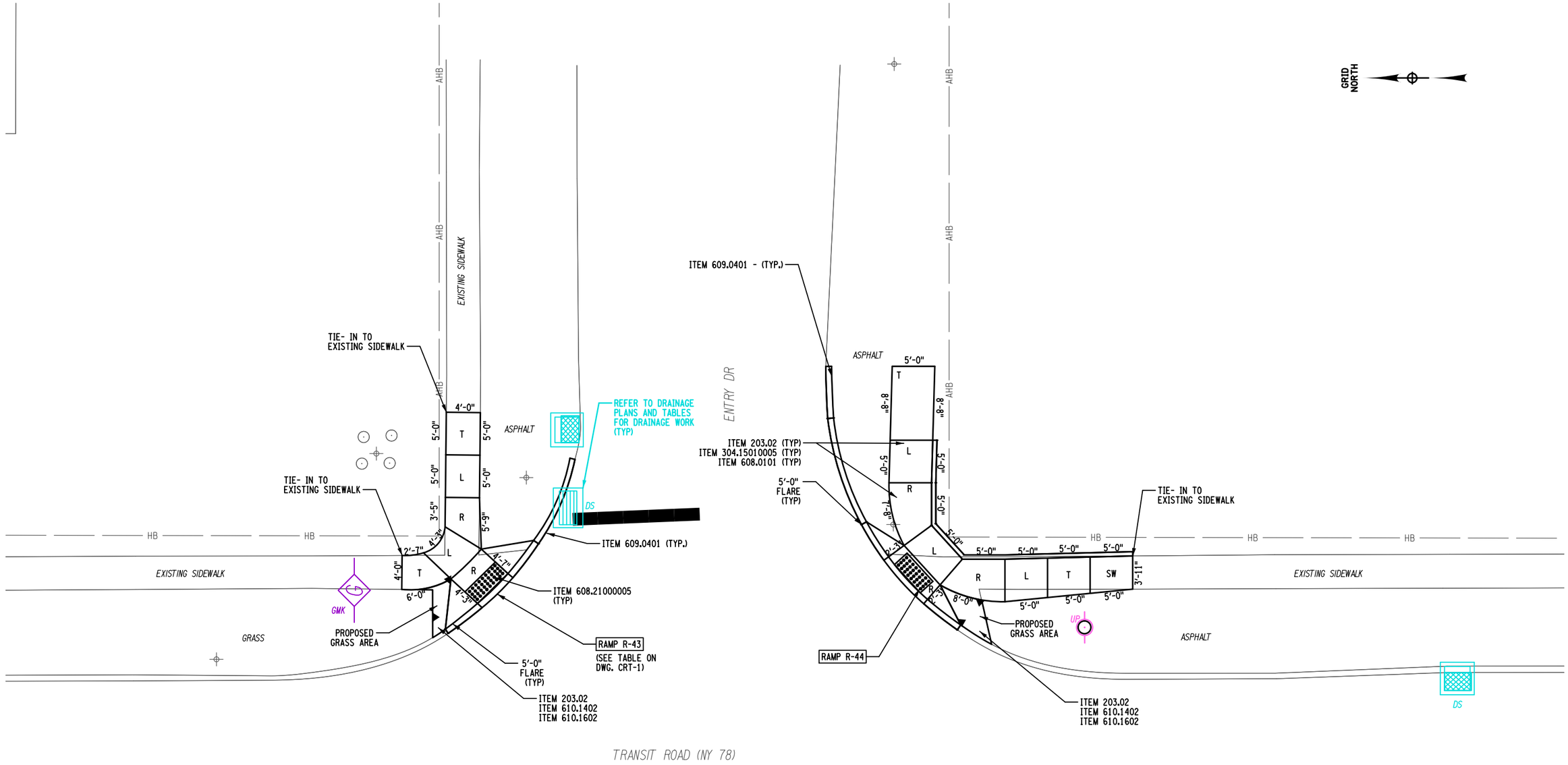

ITEM SUMMARY:

ITEM 203.02 - UNCLASSIFIED EXCAVATION AND DISPOSAL (CY)
ITEM 304.15010005 - SUBBASE COURSE, OPTIONAL TYPE (MODIFIED) (CY)
ITEM 608.0101 - CONCRETE SIDEWALKS AND DRIVEWAYS (CY)
ITEM 608.21000005 - CAST IRON EMBEDDED DETECTABLE WARNING UNITS (SY)
ITEM 609.0401 - CAST IN PLACE CONCRETE CURB VF150G (LF)
ITEM 610.1402 - TOPSOIL - ROADSIDE (CY)
ITEM 610.1602 - TURF ESTABLISHMENT - LAWNS (SY)

LEGEND
L = LANDING / TURNING SPACE
R = RAMP
T = TRANSITION
SW = SIDEWALK

6 0 6 12 18 24'
1" = 12'

AFFIX SEAL:
ON:

ALTERED BY:
ON:

D264571
STATE OF NEW YORK
ROBERT F. SCHALLER
NO. 082465
LICENSED PROFESSIONAL ENGINEER

AS-BUILT REVISIONS
DESCRIPTION OF ALTERATIONS:

NY 78, TRANSIT ROAD, S.H. 1334A-1
FRENCH ROAD TO WEHRLE DRIVE
TOWNS OF CHEEKTOWAGA & LANCASTER
VILLAGE OF DEPEW
COUNTY: ERIE REGION: 05

PIN 5813.61
NY 78

BRIDGES

CULVERTS

ALL DIMENSIONS IN ft UNLESS OTHERWISE NOTED

CURB RAMP/ ADA PANS
NE & SE - TRANSIT & ENTRY DR.

CONTRACT NUMBER
D264571

DRAWING NO. CRP-20
SHEET NO. 245

IT IS A VIOLATION OF LAW FOR ANY PERSON, UNLESS THEY ARE ACTING UNDER THE DIRECTION OF A LICENSED PROFESSIONAL ENGINEER, ARCHITECT, LANDSCAPE ARCHITECT, OR LAND SURVEYOR, TO ALTER AN ITEM IN ANY WAY. IF AN ITEM BEARING THE STAMP OF A LICENSED PROFESSIONAL IS ALTERED, THE ALTERING ENGINEER, ARCHITECT, LANDSCAPE ARCHITECT, OR LAND SURVEYOR SHALL STAMP THE DOCUMENT AND INCLUDE THE NOTATION "ALTERED BY" FOLLOWED BY THEIR SIGNATURE, THE DATE OF SUCH ALTERATION, AND A SPECIFIC DESCRIPTION OF THE ALTERATION.

NEW YORK STATE OF OPPORTUNITY. Department of Transportation

DESIGN SUPERVISOR S. S. VAIDYA
JOB MANAGER R. F. SCHALLER
DESIGN H. M. BELACHEW
CHECK R. F. SCHALLER
DRAFTING H. M. BELACHEW
CHECK R. F. SCHALLER
PROJECT MANAGER S. S. VAIDYA

FILE NAME = 581361_CPH_HWY_CRP-20.dgn
DATE/TIME = 22-JUN-2021 12:44
USER = cortes

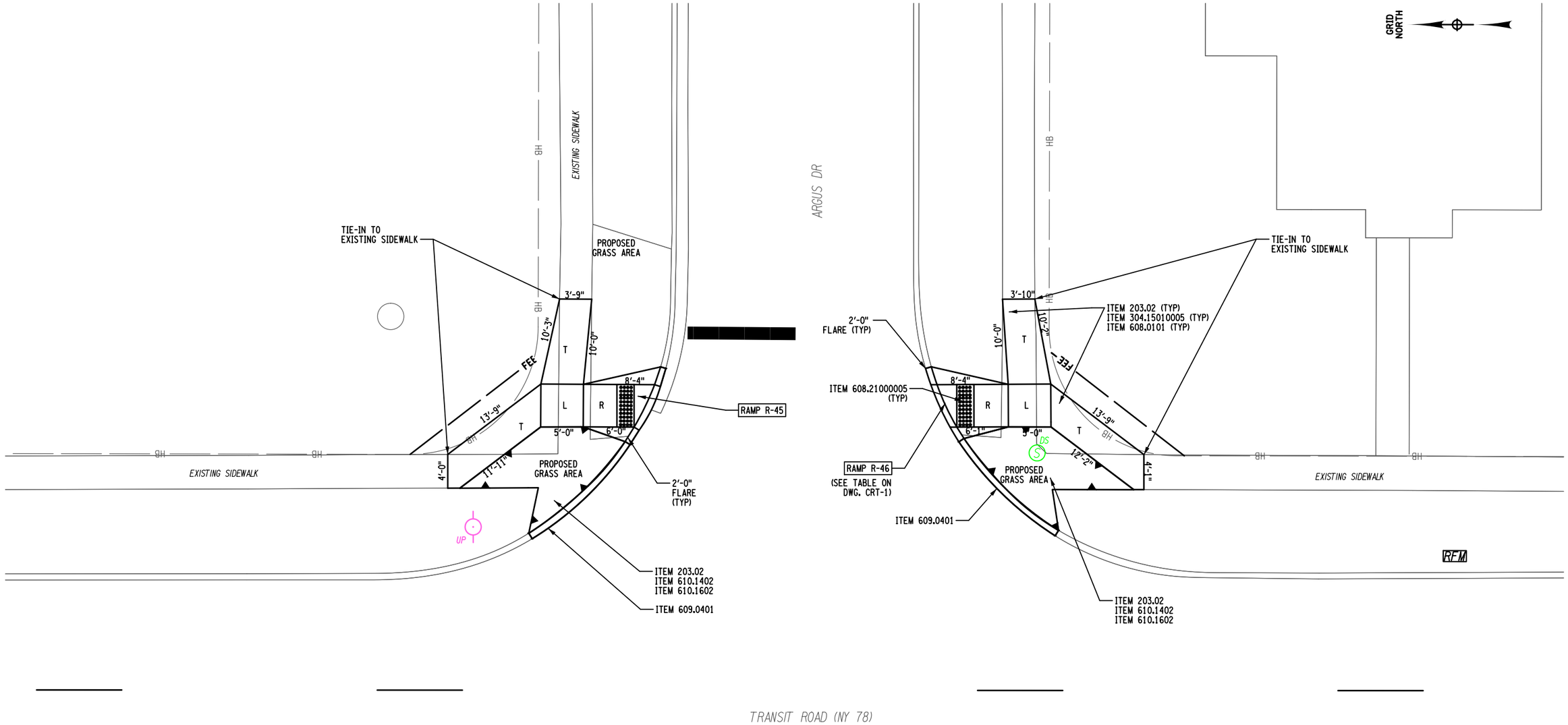

6 0 6 12 18 24'

1" = 12'

ITEM SUMMARY:

ITEM 203.02 - UNCLASSIFIED EXCAVATION AND DISPOSAL (CY)
ITEM 304.15010005 - SUBBASE COURSE, OPTIONAL TYPE (MODIFIED) (CY)
ITEM 608.0101 - CONCRETE SIDEWALKS AND DRIVEWAYS (CY)
ITEM 608.21000005 - CAST IRON EMBEDDED DETECTABLE WARNING UNITS (SY)
ITEM 609.0401 - CAST IN PLACE CONCRETE CURB VF150G (LF)
ITEM 610.1402 - TOPSOIL - ROADSIDE (CY)
ITEM 610.1602 - TURF ESTABLISHMENT - LAWNS (SY)

LEGEND
L = LANDING / TURNING SPACE
R = RAMP
T = TRANSITION
SW = SIDEWALK

AFFIX SEAL:
ON:

ALTERED BY:
ON:

D264571

STATE OF NEW YORK
ROBERT F. SCHALLER
NO. 082465
LICENSED PROFESSIONAL ENGINEER

AS-BUILT REVISIONS
DESCRIPTION OF ALTERATIONS:

NY 78, TRANSIT ROAD, S.H. 1334A-1
FRENCH ROAD TO WEHRLE DRIVE
TOWNS OF CHEEKTOWAGA & LANCASTER
VILLAGE OF DEPEW
COUNTY: ERIE REGION: 05

PIN 5813.61
NY 78

BRIDGES

CULVERTS

ALL DIMENSIONS IN ft UNLESS OTHERWISE NOTED

CURB RAMP / ADA PLANS
NE & SE - TRANSIT & ARGUS DR.

CONTRACT NUMBER
D264571

DRAWING NO. CRP-21
SHEET NO. 246

IT IS A VIOLATION OF LAW FOR ANY PERSON, UNLESS THEY ARE ACTING UNDER THE DIRECTION OF A LICENSED PROFESSIONAL ENGINEER, ARCHITECT, LANDSCAPE ARCHITECT, OR LAND SURVEYOR, TO ALTER AN ITEM IN ANY WAY. IF AN ITEM BEARING THE STAMP OF A LICENSED PROFESSIONAL IS ALTERED, THE ALTERING ENGINEER, ARCHITECT, LANDSCAPE ARCHITECT, OR LAND SURVEYOR SHALL STAMP THE DOCUMENT AND INCLUDE THE NOTATION "ALTERED BY" FOLLOWED BY THEIR SIGNATURE, THE DATE OF SUCH ALTERATION, AND A SPECIFIC DESCRIPTION OF THE ALTERATION.

NEW YORK STATE OF OPPORTUNITY. Department of Transportation

DESIGN SUPERVISOR S. S. VAIDYA JOB MANAGER R. F. SCHALLER DESIGN H. M. BELACHEW CHECK R. F. SCHALLER DRAFTING H. M. BELACHEW CHECK R. F. SCHALLER PROJECT MANAGER S. S. VAIDYA

FILE NAME = 581361_CPH_HWY_CRP-21.dgn
DATE/TIME = 22-JUN-2021 12:44
USER = corites

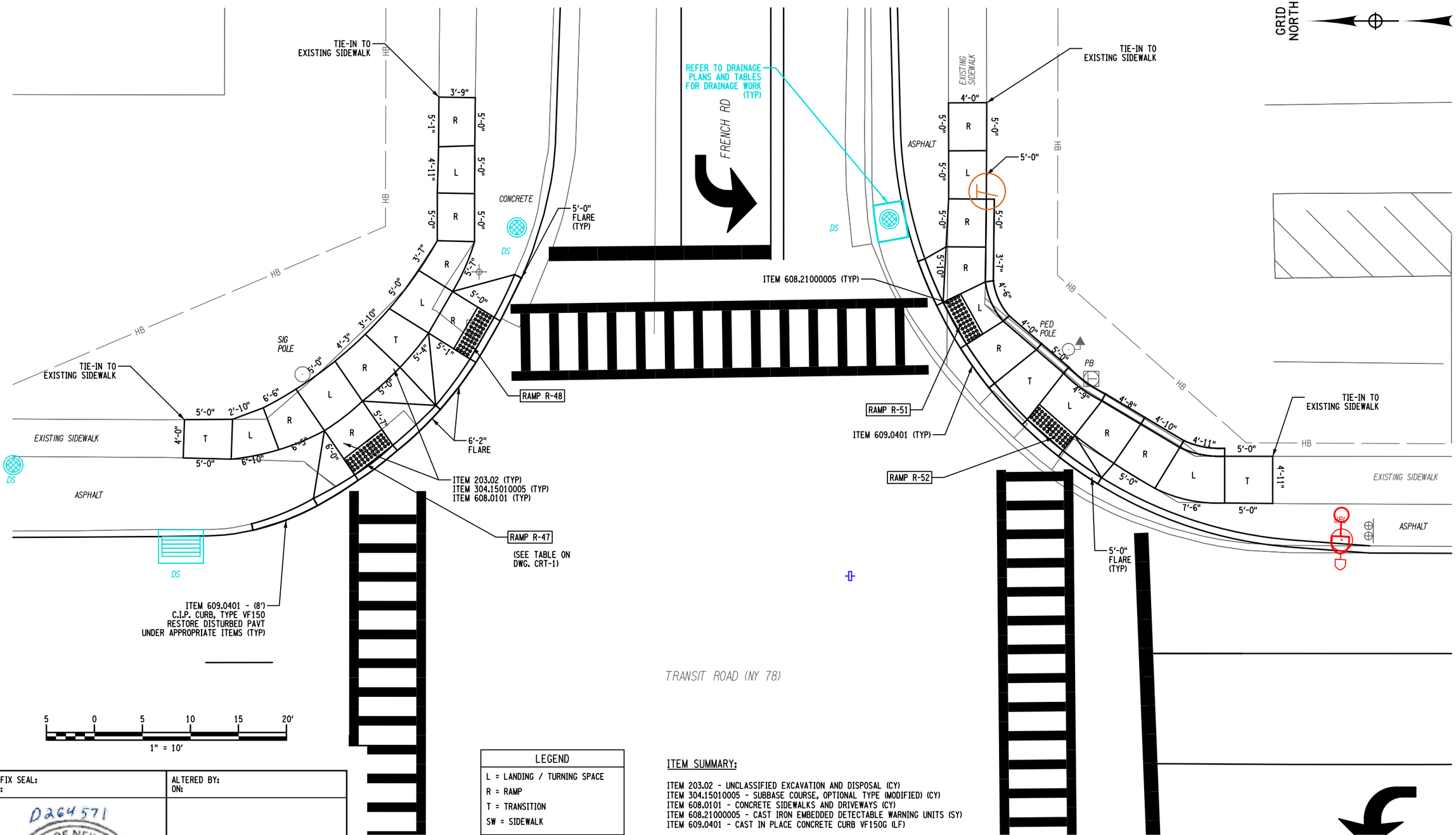

LEGEND
L = LANDING / TURNING SPACE
R = RAMP
T = TRANSITION
SW = SIDEWALK

ITEM SUMMARY:

ITEM 203.02 - UNCLASSIFIED EXCAVATION AND DISPOSAL (CY)
ITEM 304.15010005 - SUBBASE COURSE, OPTIONAL TYPE (MODIFIED) (CY)
ITEM 608.0101 - CONCRETE SIDEWALKS AND DRIVEWAYS (CY)
ITEM 608.21000005 - CAST IRON EMBEDDED DETECTABLE WARNING UNITS (SY)
ITEM 609.0401 - CAST IN PLACE CONCRETE CURB VF150G (LF)

AFFIX SEAL:
ON:

D264571

STATE OF NEW YORK · ROBERT F. SCHALLER · LICENSED PROFESSIONAL ENGINEER · NO. 082465

ALTERED BY:
ON:

AS-BUILT REVISIONS
DESCRIPTION OF ALTERATIONS:

NY 78, TRANSIT ROAD, S.H. 1334A-1
FRENCH ROAD TO WEHRLE DRIVE
TOWNS OF CHEEKTOWAGA & LANCASTER
VILLAGE OF DEPEW
COUNTY: ERIE REGION: 05

PIN 5813.61
NY 78

BRIDGES

CULVERTS

ALL DIMENSIONS IN ft UNLESS OTHERWISE NOTED

CURB RAMP / ADA PLANS
NE & SE - TRANSIT & FRENCH

CONTRACT NUMBER
D264571

DRAWING NO. CRP-22
SHEET NO. 247

IT IS A VIOLATION OF LAW FOR ANY PERSON, UNLESS THEY ARE ACTING UNDER THE DIRECTION OF A LICENSED PROFESSIONAL ENGINEER, ARCHITECT, LANDSCAPE ARCHITECT, OR LAND SURVEYOR, TO ALTER AN ITEM IN ANY WAY. IF AN ITEM BEARING THE STAMP OF A LICENSED PROFESSIONAL IS ALTERED, THE ALTERING ENGINEER, ARCHITECT, LANDSCAPE ARCHITECT, OR LAND SURVEYOR SHALL STAMP THE DOCUMENT AND INCLUDE THE NOTATION "ALTERED BY" FOLLOWED BY THEIR SIGNATURE, THE DATE OF SUCH ALTERATION, AND A SPECIFIC DESCRIPTION OF THE ALTERATION.

NEW YORK STATE OF OPPORTUNITY. Department of Transportation

PROJECT MANAGER S. S. VAIDYA
CHECK R. F. SCHALLER
DRAFTING H. M. BELACHEW
CHECK R. F. SCHALLER
DESIGN H. M. BELACHEW
JOB MANAGER R. F. SCHALLER
DESIGN SUPERVISOR S. S. VAIDYA

FILE NAME = 581361_CPH_HWY_CRP-22.dgn
DATE/TIME = 22-JUN-2021 12:44
USER = ccrites

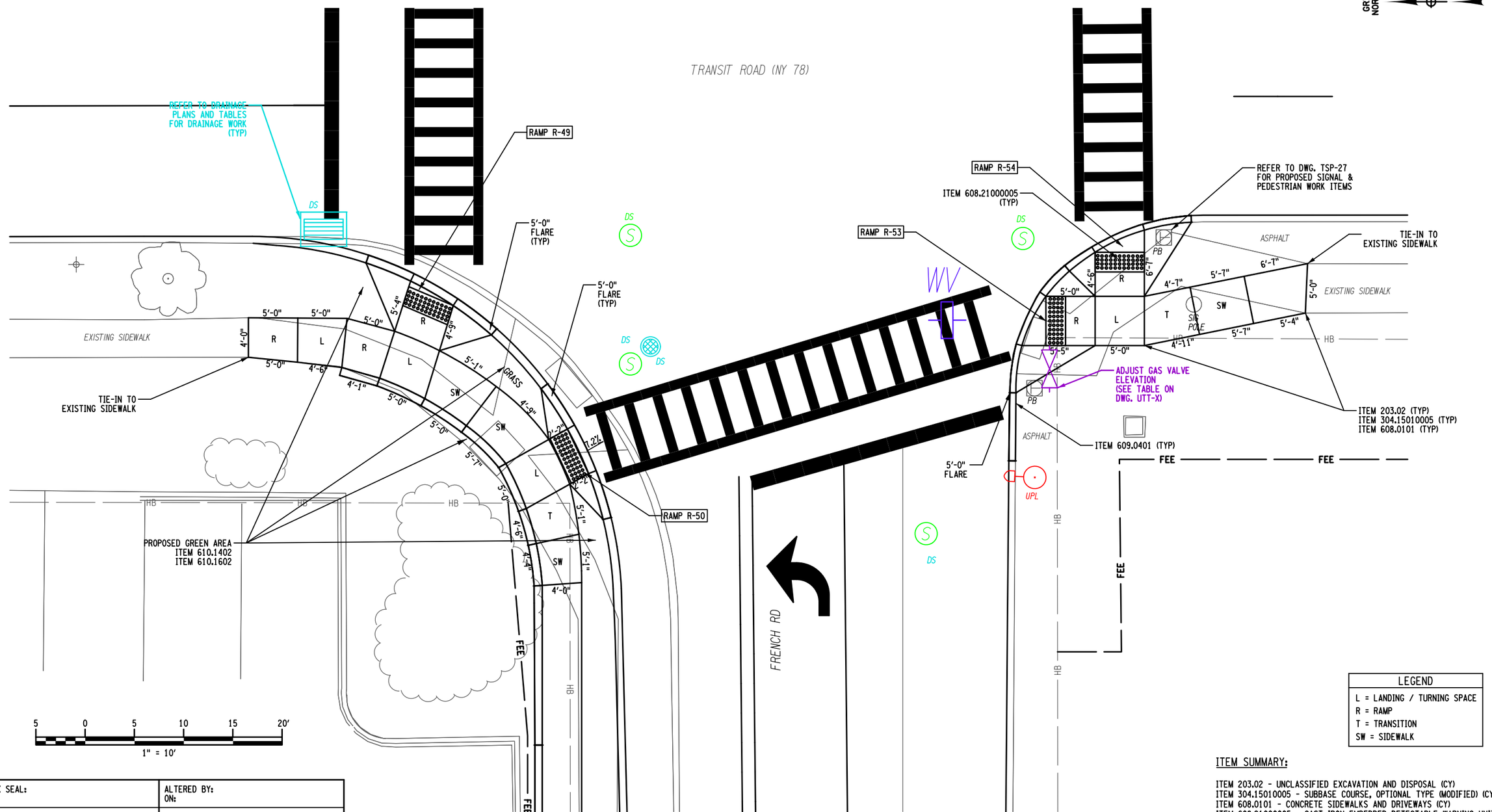

LEGEND
L = LANDING / TURNING SPACE
R = RAMP
T = TRANSITION
SW = SIDEWALK

ITEM SUMMARY:

ITEM 203.02 - UNCLASSIFIED EXCAVATION AND DISPOSAL (CY)
ITEM 304.15010005 - SUBBASE COURSE, OPTIONAL TYPE (MODIFIED) (CY)
ITEM 608.0101 - CONCRETE SIDEWALKS AND DRIVEWAYS (CY)
ITEM 608.21000005 - CAST IRON EMBEDDED DETECTABLE WARNING UNITS (SY)
ITEM 609.0401 - CAST IN PLACE CONCRETE CURB VF150G (LF)
ITEM 610.1402 - TOPSOIL - ROADSIDE (CY)
ITEM 610.1602 - TURF ESTABLISHMENT - LAWNS (SY)

AFFIX SEAL:
ON:

D264571

STATE OF NEW YORK
ROBERT F. SCHALLER
NO. 082465
LICENSED PROFESSIONAL ENGINEER

ALTERED BY:
ON:

AS-BUILT REVISIONS
DESCRIPTION OF ALTERATIONS:

NY 78, TRANSIT ROAD, S.H. 1334A-1
FRENCH ROAD TO WEHRLE DRIVE
TOWNS OF CHEEKTOWAGA & LANCASTER
VILLAGE OF DEPEW
COUNTY: ERIE REGION: 05

PIN 5813.61
NY 78

BRIDGES

CULVERTS

ALL DIMENSIONS IN ft UNLESS OTHERWISE NOTED

CURB RAMP / ADA PLANS
TRANSIT & FRENCH RD.

CONTRACT NUMBER
D264571

DRAWING NO. CRP-23
SHEET NO. 248

IT IS A VIOLATION OF LAW FOR ANY PERSON, UNLESS THEY ARE ACTING UNDER THE DIRECTION OF A LICENSED PROFESSIONAL ENGINEER, ARCHITECT, LANDSCAPE ARCHITECT, OR LAND SURVEYOR, TO ALTER AN ITEM IN ANY WAY. IF AN ITEM BEARING THE STAMP OF A LICENSED PROFESSIONAL IS ALTERED, THE ALTERING ENGINEER, ARCHITECT, LANDSCAPE ARCHITECT, OR LAND SURVEYOR SHALL STAMP THE DOCUMENT AND INCLUDE THE NOTATION "ALTERED BY" FOLLOWED BY THEIR SIGNATURE, THE DATE OF SUCH ALTERATION, AND A SPECIFIC DESCRIPTION OF THE ALTERATION.

NEW YORK STATE OF OPPORTUNITY. Department of Transportation

DESIGN SUPERVISOR S. S. VAIDYA JOB MANAGER R. F. SCHALLER DESIGN H. M. BELACHEW CHECK R. F. SCHALLER DRAFTING H. M. BELACHEW CHECK R. F. SCHALLER PROJECT MANAGER S. S. VAIDYA

FILE NAME = 581361_CPH_HWY_CRP-23.dgn
DATE/TIME = 22-JUN-2021 12:45
USER = cortes

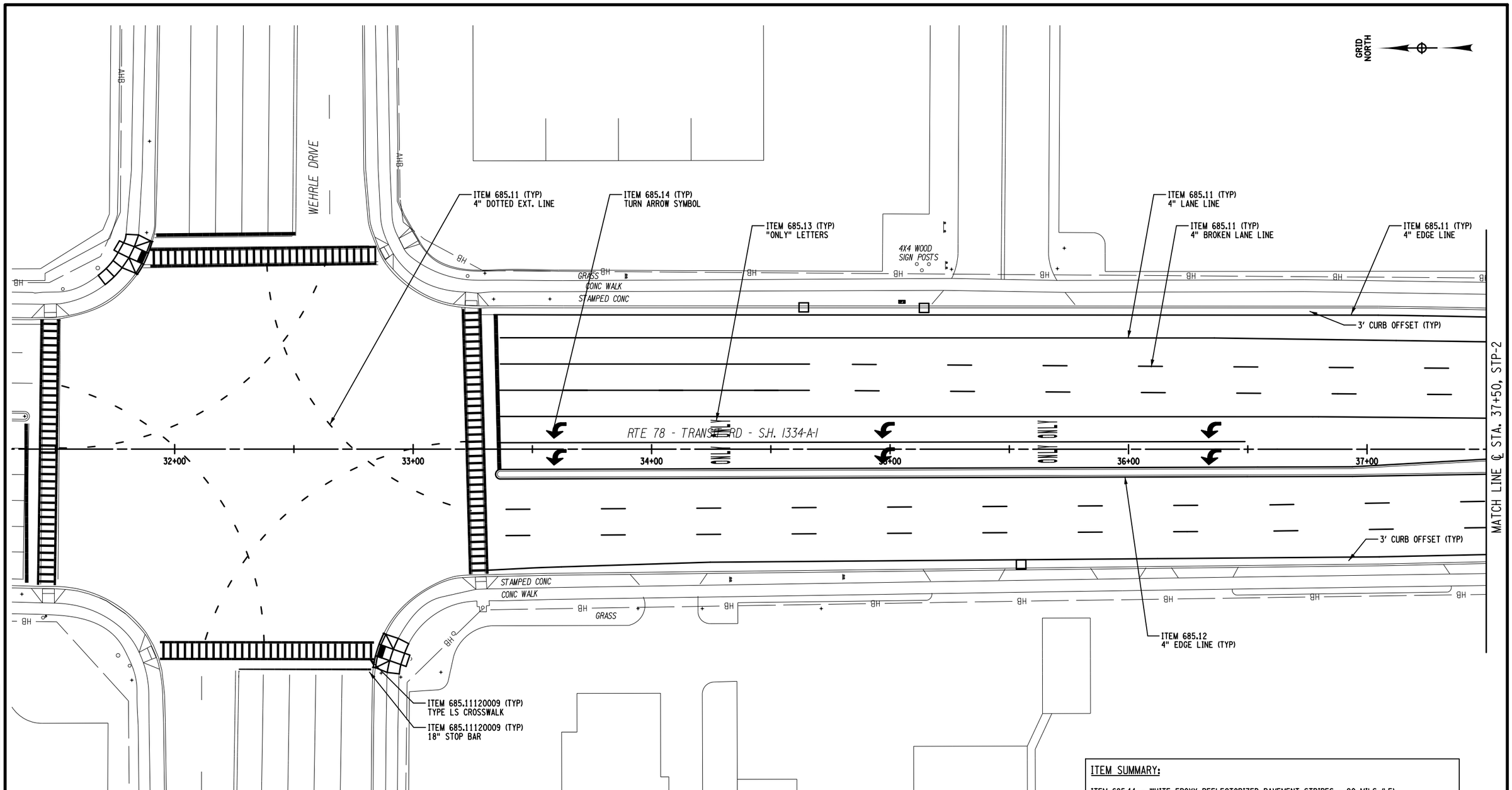

ITEM SUMMARY:

ITEM 685.11 - WHITE EPOXY REFLECTORIZED PAVEMENT STRIPES - 20 MILS (LF)
ITEM 685.12 - YELLOW EPOXY REFLECTORIZED PAVEMENT STRIPES - 20 MILS (LF)
ITEM 685.11120009 - EPOXY REFLECTORIZED PAVEMENT STRIPES - 20 MILS - HAND WORK (LF)
ITEM 685.13 - WHITE EPOXY REFLECTORIZED PAVEMENT LETTERS - 20 MILS (EA)
ITEM 685.14 - WHITE EPOXY REFLECTORIZED PAVEMENT SYMBOLS - 20 MILS (EA)

AFFIX SEAL:
ON:

D264571

STATE OF NEW YORK
ROBERT F. SCHALLER
LICENSED PROFESSIONAL ENGINEER
NO. 082465

ALTERED BY:
ON:

AS-BUILT REVISIONS
DESCRIPTION OF ALTERATIONS:

NY 78, TRANSIT ROAD, S.H. 1334A-1
FRENCH ROAD TO WEHRLE DRIVE
TOWNS OF CHEEKTOWAGA & LANCASTER
VILLAGE OF DEPEW
COUNTY: ERIE REGION: 05

PIN 5813.61
NY 78
UTILITY QUALITY LEVEL D

BRIDGES

CULVERTS

ALL DIMENSIONS IN ft UNLESS OTHERWISE NOTED

STRIPING PLANS - SHEET 1
STA. 31+32 TO STA. 37+50

CONTRACT NUMBER
D264571

DRAWING NO. STP-1
SHEET NO. 249

IT IS A VIOLATION OF LAW FOR ANY PERSON, UNLESS THEY ARE ACTING UNDER THE DIRECTION OF A LICENSED PROFESSIONAL ENGINEER, ARCHITECT, LANDSCAPE ARCHITECT, OR LAND SURVEYOR, TO ALTER AN ITEM IN ANY WAY. IF AN ITEM BEARING THE STAMP OF A LICENSED PROFESSIONAL IS ALTERED, THE ALTERING ENGINEER, ARCHITECT, LANDSCAPE ARCHITECT, OR LAND SURVEYOR SHALL STAMP THE DOCUMENT AND INCLUDE THE NOTATION "ALTERED BY" FOLLOWED BY THEIR SIGNATURE, THE DATE OF SUCH ALTERATION, AND A SPECIFIC DESCRIPTION OF THE ALTERATION.

NEW YORK STATE OF OPPORTUNITY. Department of Transportation

PROJECT MANAGER S. S. VAIDYA
CHECK R. F. SCHALLER
DRAFTING C. L. CRITES
CHECK R. F. SCHALLER
DESIGN C. L. CRITES
JOB MANAGER R. F. SCHALLER
DESIGN SUPERVISOR S. S. VAIDYA

FILE NAME = 581361_CPH_HWY_STP-1.dgn
DATE/TIME = 22-JUN-2021 12:45
USER = ccrites

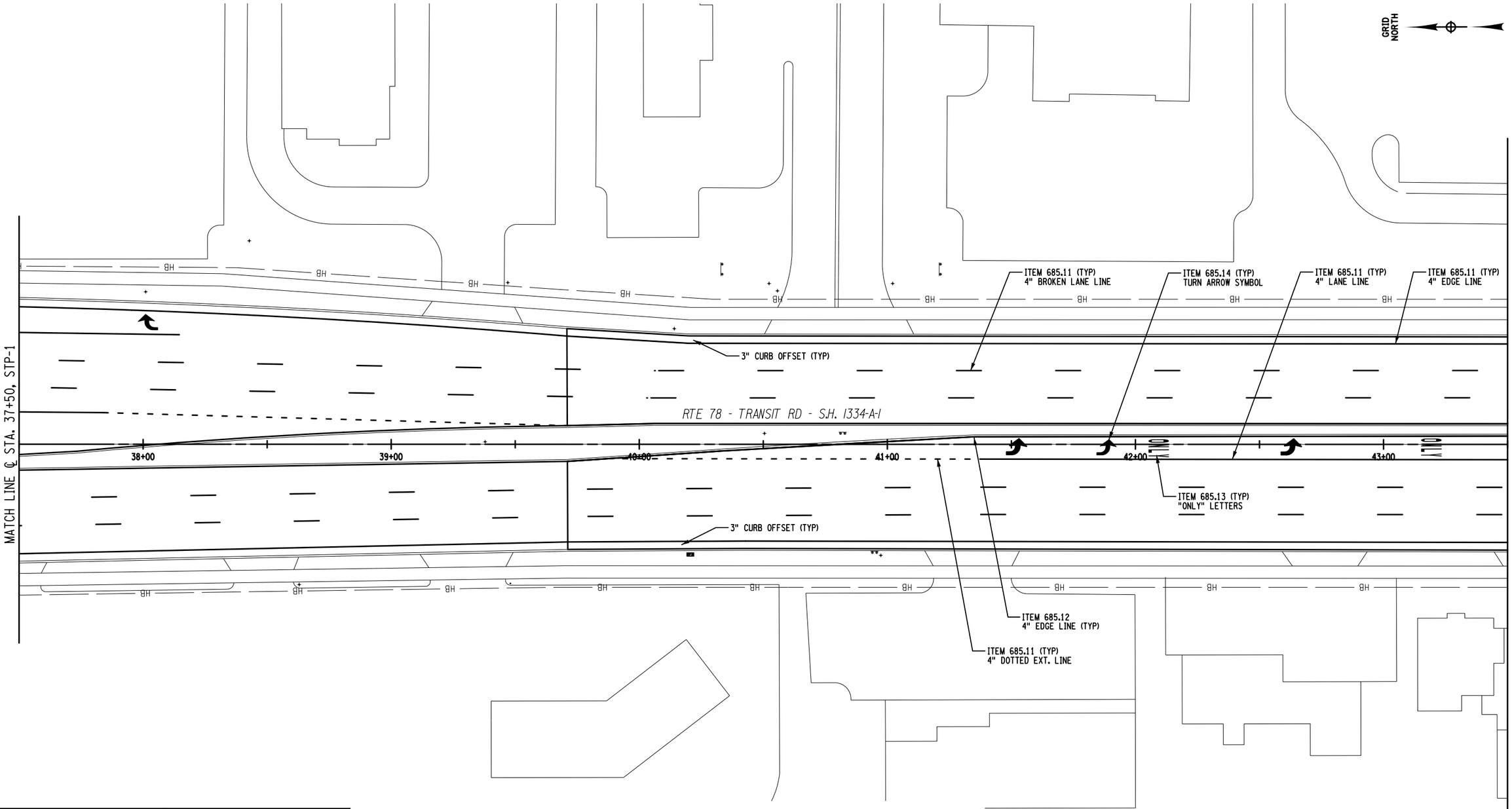

20 0 20 40 60 80′

1" = 40′

ITEM SUMMARY:

ITEM 685.11 - WHITE EPOXY REFLECTORIZED PAVEMENT STRIPES - 20 MILS (LF)
ITEM 685.12 - YELLOW EPOXY REFLECTORIZED PAVEMENT STRIPES - 20 MILS (LF)
ITEM 685.13 - WHITE EPOXY REFLECTORIZED PAVEMENT LETTERS - 20 MILS (EA)
ITEM 685.14 - WHITE EPOXY REFLECTORIZED PAVEMENT SYMBOLS - 20 MILS (EA)

AFFIX SEAL:
ON:

D264571

STATE OF NEW YORK
ROBERT F. SCHALLER
NO. 082465
LICENSED PROFESSIONAL ENGINEER

ALTERED BY:
ON:

AS-BUILT REVISIONS
DESCRIPTION OF ALTERATIONS:

NY 78, TRANSIT ROAD, S.H. 1334A-1
FRENCH ROAD TO WEHRLE DRIVE
TOWNS OF CHEEKTOWAGA & LANCASTER
VILLAGE OF DEPEW
COUNTY: ERIE REGION: 05

PIN 5813.61
NY 78
UTILITY QUALITY LEVEL D

BRIDGES

CULVERTS

ALL DIMENSIONS IN ft UNLESS OTHERWISE NOTED

STRIPING PLANS - SHEET 2
STA. 37+50 TO STA. 43+50

CONTRACT NUMBER
D264571

DRAWING NO. STP-2
SHEET NO. 250

IT IS A VIOLATION OF LAW FOR ANY PERSON, UNLESS THEY ARE ACTING UNDER THE DIRECTION OF A LICENSED PROFESSIONAL ENGINEER, ARCHITECT, LANDSCAPE ARCHITECT, OR LAND SURVEYOR, TO ALTER AN ITEM IN ANY WAY. IF AN ITEM BEARING THE STAMP OF A LICENSED PROFESSIONAL IS ALTERED, THE ALTERING ENGINEER, ARCHITECT, LANDSCAPE ARCHITECT, OR LAND SURVEYOR SHALL STAMP THE DOCUMENT AND INCLUDE THE NOTATION "ALTERED BY" FOLLOWED BY THEIR SIGNATURE, THE DATE OF SUCH ALTERATION, AND A SPECIFIC DESCRIPTION OF THE ALTERATION.

NEW YORK STATE OF OPPORTUNITY. Department of Transportation

DESIGN SUPERVISOR S. S. VAIDYA
JOB MANAGER R. F. SCHALLER
DESIGN C. L. CRITES
CHECK R. F. SCHALLER
DRAFTING C. L. CRITES
CHECK R. F. SCHALLER
PROJECT MANAGER S. S. VAIDYA

FILE NAME = 581361_CPH_HWY_STP-2.dgn
DATE/TIME = 22-JUN-2021 12:45
USER = cortes

PROJECT MANAGER S. S. VAIDYA
CHECK R. F. SCHALLER
DRAFTING C. L. CRITES
CHECK R. F. SCHALLER
DESIGN C. L. CRITES
JOB MANAGER R. F. SCHALLER
DESIGN SUPERVISOR S. S. VAIDYA

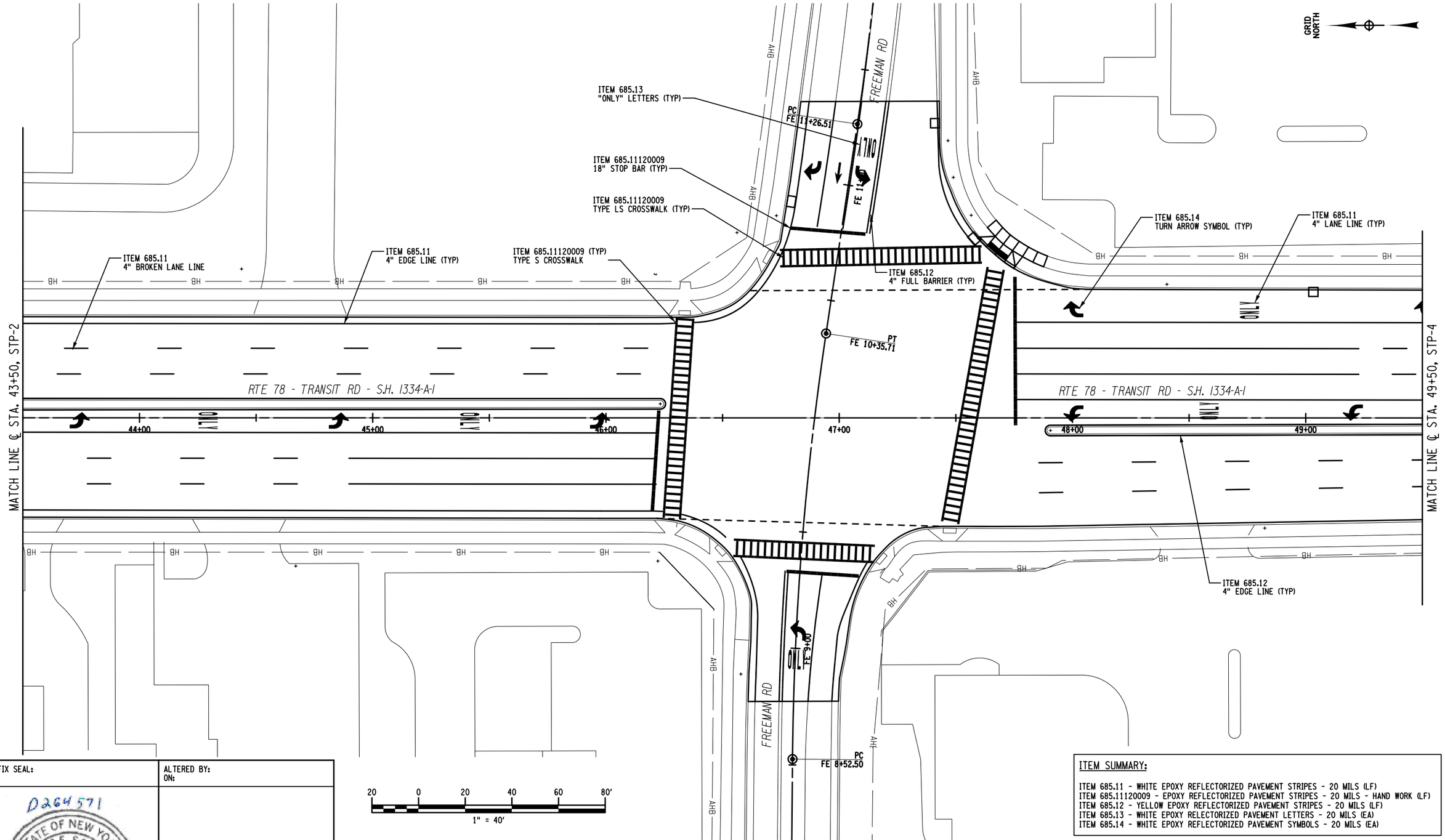

ITEM SUMMARY:

ITEM 685.11 - WHITE EPOXY REFLECTORIZED PAVEMENT STRIPES - 20 MILS (LF)
ITEM 685.11120009 - EPOXY REFLECTORIZED PAVEMENT STRIPES - 20 MILS - HAND WORK (LF)
ITEM 685.12 - YELLOW EPOXY REFLECTORIZED PAVEMENT STRIPES - 20 MILS (LF)
ITEM 685.13 - WHITE EPOXY RELECTORIZED PAVEMENT LETTERS - 20 MILS (EA)
ITEM 685.14 - WHITE EPOXY REFLECTORIZED PAVEMENT SYMBOLS - 20 MILS (EA)

AFFIX SEAL:
ON:

D264571
STATE OF NEW YORK
ROBERT F. SCHALLER
NO. 082465
LICENSED PROFESSIONAL ENGINEER

ALTERED BY:
ON:

AS-BUILT REVISIONS
DESCRIPTION OF ALTERATIONS:

NY 78, TRANSIT ROAD, S.H. 1334A-1
FRENCH ROAD TO WEHRLE DRIVE
TOWNS OF CHEEKTOWAGA & LANCASTER
VILLAGE OF DEPEW
COUNTY: ERIE REGION: 05

PIN 5813.61
NY 78
UTILITY QUALITY LEVEL D

BRIDGES

CULVERTS

ALL DIMENSIONS IN ft UNLESS OTHERWISE NOTED

STRIPING PLANS - SHEET 3
STA. 43+50 TO STA. 49+50

CONTRACT NUMBER
D264571

DRAWING NO. STP-3
SHEET NO. 251

IT IS A VIOLATION OF LAW FOR ANY PERSON, UNLESS THEY ARE ACTING UNDER THE DIRECTION OF A LICENSED PROFESSIONAL ENGINEER, ARCHITECT, LANDSCAPE ARCHITECT, OR LAND SURVEYOR, TO ALTER AN ITEM IN ANY WAY. IF AN ITEM BEARING THE STAMP OF A LICENSED PROFESSIONAL IS ALTERED, THE ALTERING ENGINEER, ARCHITECT, LANDSCAPE ARCHITECT, OR LAND SURVEYOR SHALL STAMP THE DOCUMENT AND INCLUDE THE NOTATION "ALTERED BY" FOLLOWED BY THEIR SIGNATURE, THE DATE OF SUCH ALTERATION, AND A SPECIFIC DESCRIPTION OF THE ALTERATION.

NEW YORK STATE OF OPPORTUNITY. Department of Transportation

FILE NAME = 581361_CPH_HWY_STP-3.dgn
DATE/TIME = 22-JUN-2021 12:45
USER = cortes

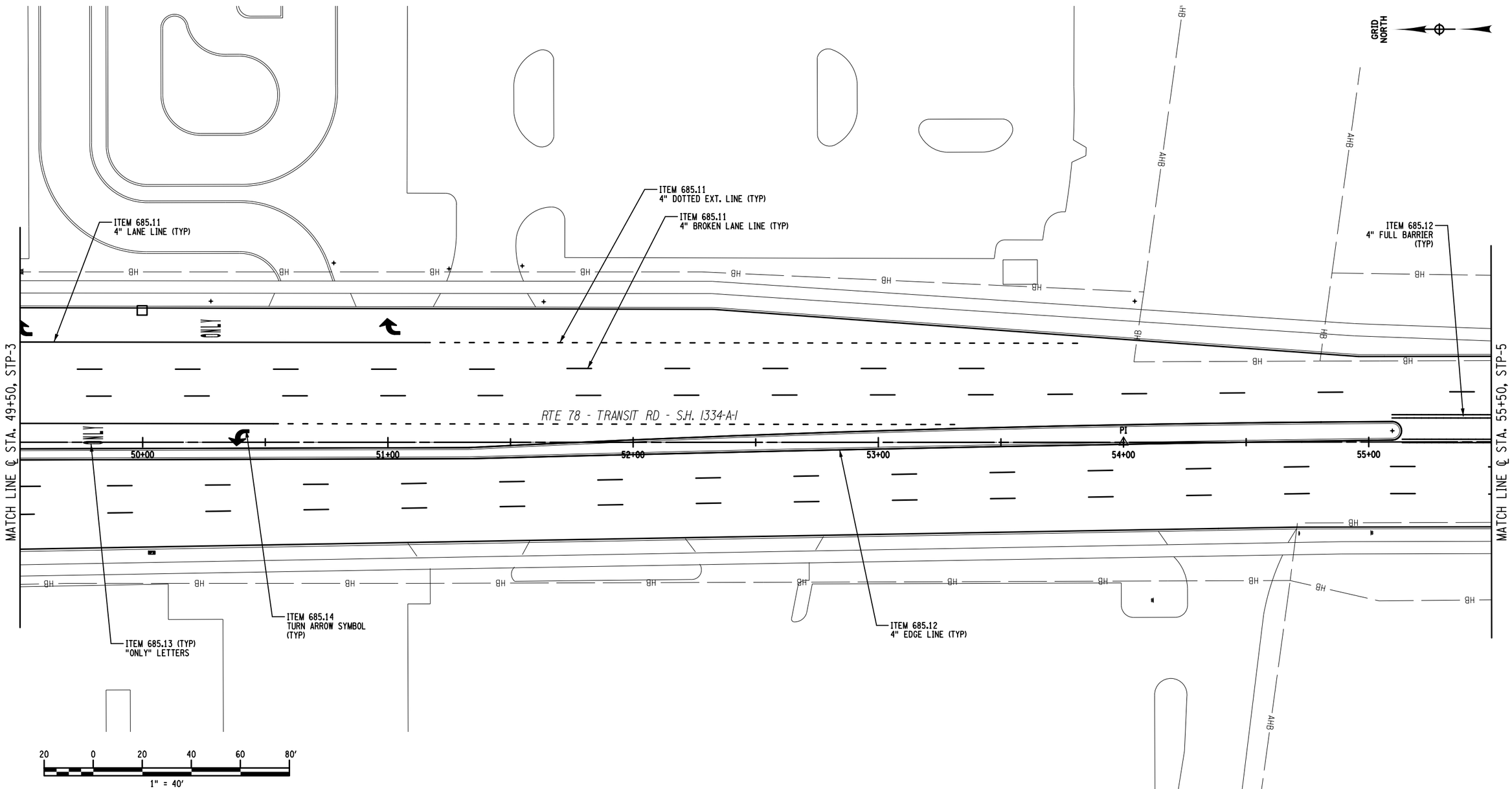

AFFIX SEAL:
ON:

ALTERED BY:
ON:

D264571

STATE OF NEW YORK
ROBERT F. SCHALLER
NO. 082465
LICENSED PROFESSIONAL ENGINEER

ITEM SUMMARY:

ITEM 685.11 - WHITE EPOXY REFLECTORIZED PAVEMENT STRIPES - 20 MILS (LF)
ITEM 685.12 - YELLOW EPOXY REFLECTORIZED PAVEMENT STRIPES - 20 MILS (LF)
ITEM 685.13 - WHITE EPOXY REFLECTORIZED PAVEMENT LETTERS - 20 MILS (EA)
ITEM 685.14 - WHITE EPOXY REFLECTORIZED PAVEMENT SYMBOLS - 20 MILS (EA)

AS-BUILT REVISIONS
DESCRIPTION OF ALTERATIONS:

NY 78, TRANSIT ROAD, S.H. 1334A-1
FRENCH ROAD TO WEHRLE DRIVE
TOWNS OF CHEEKTOWAGA & LANCASTER
VILLAGE OF DEPEW
COUNTY: ERIE REGION: 05

PIN 5813.61
NY 78
UTILITY QUALITY LEVEL D

BRIDGES

CULVERTS

ALL DIMENSIONS IN ft UNLESS OTHERWISE NOTED

STRIPING PLANS - SHEET 4
STA. 49+50 TO STA. 55+50

CONTRACT NUMBER
D264571

DRAWING NO. STP-4
SHEET NO. 252

IT IS A VIOLATION OF LAW FOR ANY PERSON, UNLESS THEY ARE ACTING UNDER THE DIRECTION OF A LICENSED PROFESSIONAL ENGINEER, ARCHITECT, LANDSCAPE ARCHITECT, OR LAND SURVEYOR, TO ALTER AN ITEM IN ANY WAY. IF AN ITEM BEARING THE STAMP OF A LICENSED PROFESSIONAL IS ALTERED, THE ALTERING ENGINEER, ARCHITECT, LANDSCAPE ARCHITECT, OR LAND SURVEYOR SHALL STAMP THE DOCUMENT AND INCLUDE THE NOTATION "ALTERED BY" FOLLOWED BY THEIR SIGNATURE, THE DATE OF SUCH ALTERATION, AND A SPECIFIC DESCRIPTION OF THE ALTERATION.

NEW YORK STATE OF OPPORTUNITY. Department of Transportation

PROJECT MANAGER S. S. VAIDYA
CHECK R. F. SCHALLER
DRAFTING C. L. CRITES
CHECK R. F. SCHALLER
DESIGN C. L. CRITES
JOB MANAGER R. F. SCHALLER
DESIGN SUPERVISOR S. S. VAIDYA

FILE NAME = 581361_CPH_HWY_STP-4.dgn
DATE/TIME = 22-JUN-2021 12:45
USER = ccrites

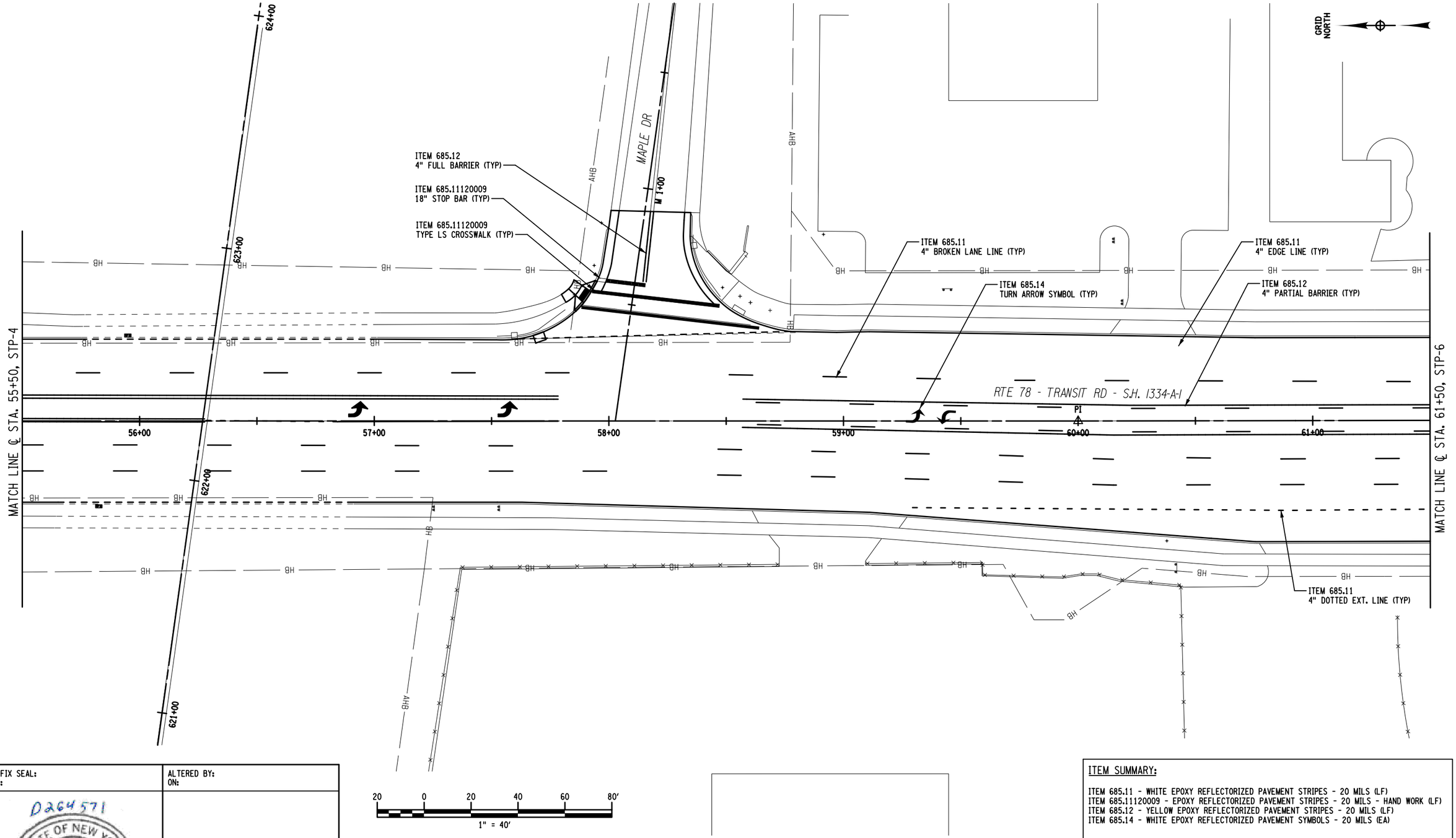

AFFIX SEAL: ON:	ALTERED BY: ON:
D264571 STATE OF NEW YORK ROBERT F. SCHALLER NO. 082465 LICENSED PROFESSIONAL ENGINEER	

ITEM SUMMARY:

ITEM 685.11 - WHITE EPOXY REFLECTORIZED PAVEMENT STRIPES - 20 MILS (LF)
ITEM 685.11120009 - EPOXY REFLECTORIZED PAVEMENT STRIPES - 20 MILS - HAND WORK (LF)
ITEM 685.12 - YELLOW EPOXY REFLECTORIZED PAVEMENT STRIPES - 20 MILS (LF)
ITEM 685.14 - WHITE EPOXY REFLECTORIZED PAVEMENT SYMBOLS - 20 MILS (EA)

AS-BUILT REVISIONS DESCRIPTION OF ALTERATIONS:	NY 78, TRANSIT ROAD, S.H. 1334A-1	PIN 5813.61 NY 78 UTILITY QUALITY LEVEL D	BRIDGES	CULVERTS	ALL DIMENSIONS IN ft UNLESS OTHERWISE NOTED	CONTRACT NUMBER D264571
	FRENCH ROAD TO WEHRLE DRIVE				STRIPING PLANS - SHEET 5 STA. 55+50 TO STA. 61+50	DRAWING NO. STP-5
	TOWNS OF CHEEKTOWAGA & LANCASTER					SHEET NO. 253
	VILLAGE OF DEPEW					
	COUNTY: ERIE REGION: 05					

IT IS A VIOLATION OF LAW FOR ANY PERSON, UNLESS THEY ARE ACTING UNDER THE DIRECTION OF A LICENSED PROFESSIONAL ENGINEER, ARCHITECT, LANDSCAPE ARCHITECT, OR LAND SURVEYOR, TO ALTER AN ITEM IN ANY WAY. IF AN ITEM BEARING THE STAMP OF A LICENSED PROFESSIONAL IS ALTERED, THE ALTERING ENGINEER, ARCHITECT, LANDSCAPE ARCHITECT, OR LAND SURVEYOR SHALL STAMP THE DOCUMENT AND INCLUDE THE NOTATION "ALTERED BY" FOLLOWED BY THEIR SIGNATURE, THE DATE OF SUCH ALTERATION, AND A SPECIFIC DESCRIPTION OF THE ALTERATION.

NEW YORK STATE OF OPPORTUNITY. Department of Transportation

PROJECT MANAGER S. S. VAIDYA
CHECK R. F. SCHALLER
DRAFTING C. L. CRITES
CHECK R. F. SCHALLER
DESIGN C. L. CRITES
JOB MANAGER R. F. SCHALLER
DESIGN SUPERVISOR S. S. VAIDYA

FILE NAME = 581361_CPH_HWY_STP-5.dgn
DATE/TIME = 22-JUN-2021 12:45
USER = cc rites

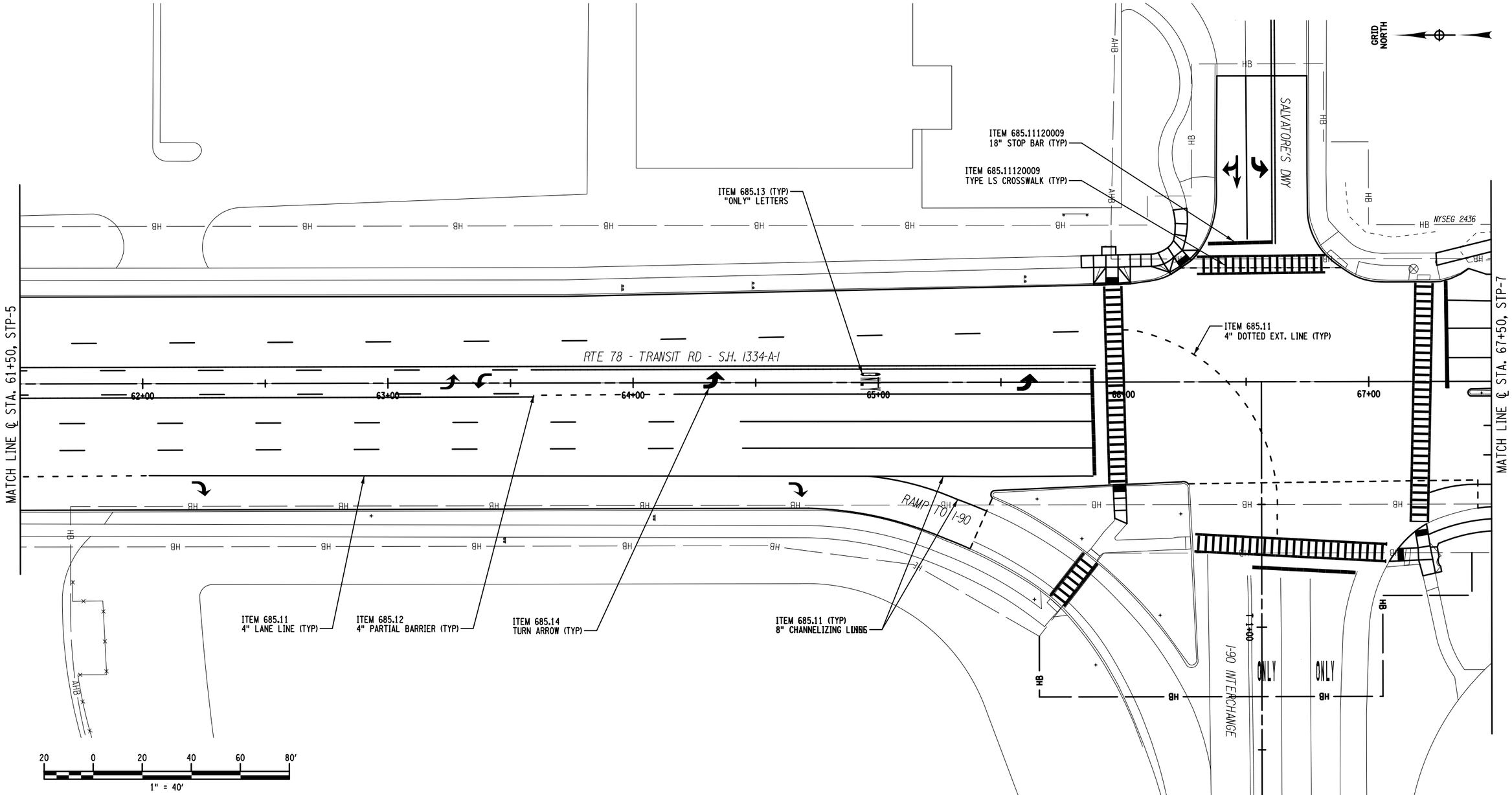

AFFIX SEAL:
ON:

ALTERED BY:
ON:

D264571

STATE OF NEW YORK
ROBERT F. SCHALLER
NO. 082465
LICENSED PROFESSIONAL ENGINEER

ITEM SUMMARY:

ITEM 685.11 - WHITE EPOXY REFLECTORIZED PAVEMENT STRIPES - 20 MILS (LF)
ITEM 685.12 - YELLOW EPOXY REFLECTORIZED PAVEMENT STRIPES - 20 MILS (LF)
ITEM 685.11120009 - EPOXY REFLECTORIZED PAVEMENT STRIPES - 20 MILS - HAND WORK (LF)
ITEM 685.13 - WHITE EPOXY REFLECTORIZED PAVEMENT LETTERS - 20 MILS (EA)
ITEM 685.14 - WHITE EPOXY REFLECTORIZED PAVEMENT SYMBOLS - 20 MILS (EA)

AS-BUILT REVISIONS
DESCRIPTION OF ALTERATIONS:

NY 78, TRANSIT ROAD, S.H. 1334A-1
FRENCH ROAD TO WEHRLE DRIVE
TOWNS OF CHEEKTOWAGA & LANCASTER
VILLAGE OF DEPEW
COUNTY: ERIE REGION: 05

PIN 5813.61
NY 78
UTILITY QUALITY LEVEL D

BRIDGES

CULVERTS

ALL DIMENSIONS IN ft UNLESS OTHERWISE NOTED

STRIPING PLANS - SHEET 6
STA. 61+50 TO STA. 67+50

CONTRACT NUMBER
D264571

DRAWING NO. STP-6
SHEET NO. 254

IT IS A VIOLATION OF LAW FOR ANY PERSON, UNLESS THEY ARE ACTING UNDER THE DIRECTION OF A LICENSED PROFESSIONAL ENGINEER, ARCHITECT, LANDSCAPE ARCHITECT, OR LAND SURVEYOR, TO ALTER AN ITEM IN ANY WAY. IF AN ITEM BEARING THE STAMP OF A LICENSED PROFESSIONAL IS ALTERED, THE ALTERING ENGINEER, ARCHITECT, LANDSCAPE ARCHITECT, OR LAND SURVEYOR SHALL STAMP THE DOCUMENT AND INCLUDE THE NOTATION "ALTERED BY" FOLLOWED BY THEIR SIGNATURE, THE DATE OF SUCH ALTERATION, AND A SPECIFIC DESCRIPTION OF THE ALTERATION.

NEW YORK STATE OF OPPORTUNITY. Department of Transportation

PROJECT MANAGER S. S. VAIDYA
CHECK R. F. SCHALLER
DRAFTING C. L. CRITES
CHECK R. F. SCHALLER
DESIGN C. L. CRITES
JOB MANAGER R. F. SCHALLER
DESIGN SUPERVISOR S. S. VAIDYA

FILE NAME = 581361_CPH_HWY_STP-6.dgn
DATE/TIME = 22-JUN-2021 12:45
USER = cortes

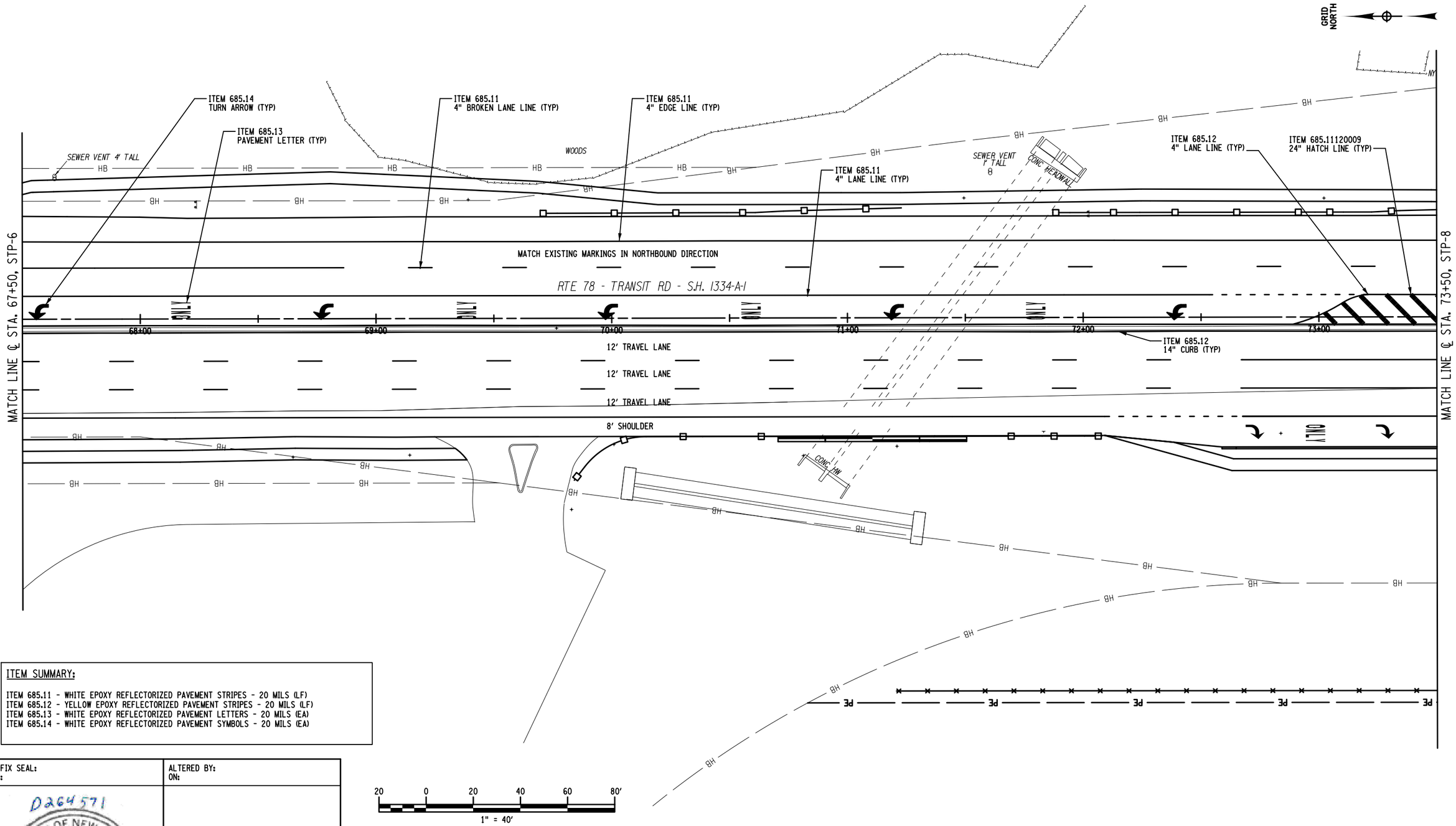

ITEM SUMMARY:

ITEM 685.11 - WHITE EPOXY REFLECTORIZED PAVEMENT STRIPES - 20 MILS (LF)
ITEM 685.12 - YELLOW EPOXY REFLECTORIZED PAVEMENT STRIPES - 20 MILS (LF)
ITEM 685.13 - WHITE EPOXY REFLECTORIZED PAVEMENT LETTERS - 20 MILS (EA)
ITEM 685.14 - WHITE EPOXY REFLECTORIZED PAVEMENT SYMBOLS - 20 MILS (EA)

AFFIX SEAL:
ON:

D264571
STATE OF NEW YORK
ROBERT F. SCHALLER
NO. 082465
LICENSED PROFESSIONAL ENGINEER

ALTERED BY:
ON:

AS-BUILT REVISIONS
DESCRIPTION OF ALTERATIONS:

NY 78, TRANSIT ROAD, S.H. 1334A-1
FRENCH ROAD TO WEHRLE DRIVE
TOWNS OF CHEEKTOWAGA & LANCASTER
VILLAGE OF DEPEW
COUNTY: ERIE REGION: 05

PIN 5813.61
NY 78
UTILITY QUALITY LEVEL D

BRIDGES

CULVERTS

ALL DIMENSIONS IN ft UNLESS OTHERWISE NOTED

STRIPING PLANS - SHEET 7
STA. 67+50 TO STA. 73+50

CONTRACT NUMBER
D264571

DRAWING NO. STP-7
SHEET NO. 255

IT IS A VIOLATION OF LAW FOR ANY PERSON, UNLESS THEY ARE ACTING UNDER THE DIRECTION OF A LICENSED PROFESSIONAL ENGINEER, ARCHITECT, LANDSCAPE ARCHITECT, OR LAND SURVEYOR, TO ALTER AN ITEM IN ANY WAY. IF AN ITEM BEARING THE STAMP OF A LICENSED PROFESSIONAL IS ALTERED, THE ALTERING ENGINEER, ARCHITECT, LANDSCAPE ARCHITECT, OR LAND SURVEYOR SHALL STAMP THE DOCUMENT AND INCLUDE THE NOTATION "ALTERED BY" FOLLOWED BY THEIR SIGNATURE, THE DATE OF SUCH ALTERATION, AND A SPECIFIC DESCRIPTION OF THE ALTERATION.

NEW YORK STATE OF OPPORTUNITY. Department of Transportation

PROJECT MANAGER S. S. VAIDYA
CHECK R. F. SCHALLER
DRAFTING C. L. CRITES
CHECK R. F. SCHALLER
DESIGN C. L. CRITES
JOB MANAGER R. F. SCHALLER
DESIGN SUPERVISOR S. S. VAIDYA

FILE NAME = 581361_CPH_HWY_STP-7.dgn
DATE/TIME = 22-JUN-2021 12:45
USER = corites

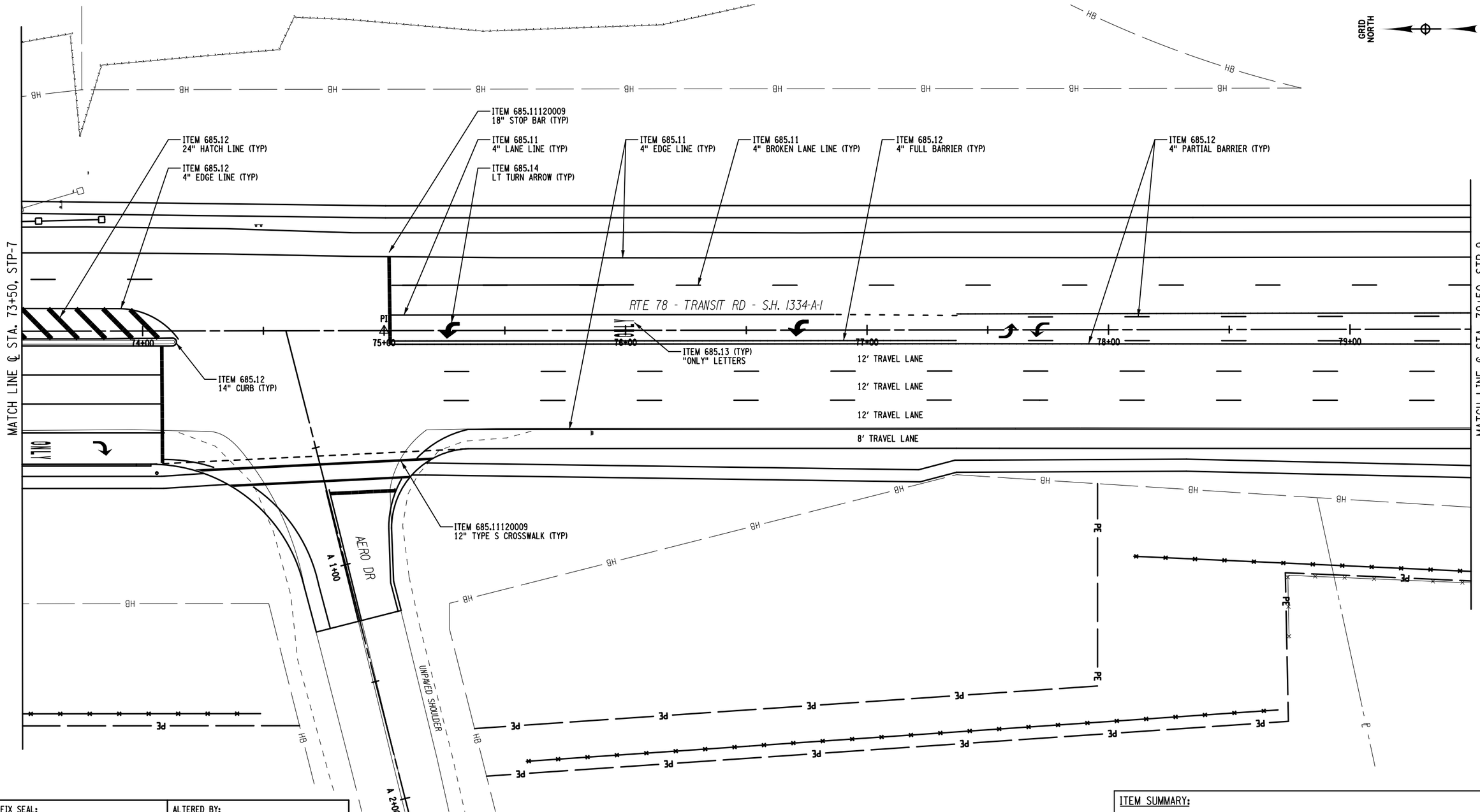

ITEM SUMMARY:

ITEM 685.11 - WHITE EPOXY REFLECTORIZED PAVEMENT STRIPES - 20 MILS (LF)
ITEM 685.12 - YELLOW EPOXY REFLECTORIZED PAVEMENT STRIPES - 20 MILS (LF)
ITEM 685.11120009 - EPOXY REFLECTORIZED PAVEMENT STRIPES - 20 MILS - HAND WORK (LF)
ITEM 685.13 - WHITE EPOXY REFLECTORIZED PAVEMENT LETTERS - 20 MILS (EA)
ITEM 685.14 - WHITE EPOXY REFLECTORIZED PAVEMENT SYMBOLS - 20 MILS (EA)

AFFIX SEAL:
ON:

ALTERED BY:
ON:

D264571

STATE OF NEW YORK
ROBERT F. SCHALLER
NO. 082465
LICENSED PROFESSIONAL ENGINEER

AS-BUILT REVISIONS
DESCRIPTION OF ALTERATIONS:

NY 78, TRANSIT ROAD, S.H. 1334A-1
FRENCH ROAD TO WEHRLE DRIVE
TOWNS OF CHEEKTOWAGA & LANCASTER
VILLAGE OF DEPEW
COUNTY: ERIE REGION: 05

PIN 5813.61
NY 78
UTILITY QUALITY LEVEL D

BRIDGES

CULVERTS

ALL DIMENSIONS IN ft UNLESS OTHERWISE NOTED

STRIPING PLANS - SHEET 8
STA. 73+50 TO STA. 79+50

CONTRACT NUMBER
D264571

DRAWING NO. STP-8
SHEET NO. 256

IT IS A VIOLATION OF LAW FOR ANY PERSON, UNLESS THEY ARE ACTING UNDER THE DIRECTION OF A LICENSED PROFESSIONAL ENGINEER, ARCHITECT, LANDSCAPE ARCHITECT, OR LAND SURVEYOR, TO ALTER AN ITEM IN ANY WAY. IF AN ITEM BEARING THE STAMP OF A LICENSED PROFESSIONAL IS ALTERED, THE ALTERING ENGINEER, ARCHITECT, LANDSCAPE ARCHITECT, OR LAND SURVEYOR SHALL STAMP THE DOCUMENT AND INCLUDE THE NOTATION "ALTERED BY" FOLLOWED BY THEIR SIGNATURE, THE DATE OF SUCH ALTERATION, AND A SPECIFIC DESCRIPTION OF THE ALTERATION.

NEW YORK STATE OF OPPORTUNITY. Department of Transportation

PROJECT MANAGER S. S. VAIDYA
CHECK R. F. SCHALLER
DRAFTING C. L. CRITES
CHECK R. F. SCHALLER
DESIGN C. L. CRITES
CHECK R. F. SCHALLER
JOB MANAGER R. F. SCHALLER
DESIGN SUPERVISOR S. S. VAIDYA

FILE NAME = 581361_CPH_HWY_STP-8.dgn
DATE/TIME = 22-JUN-2021 12:45
USER = ccrites

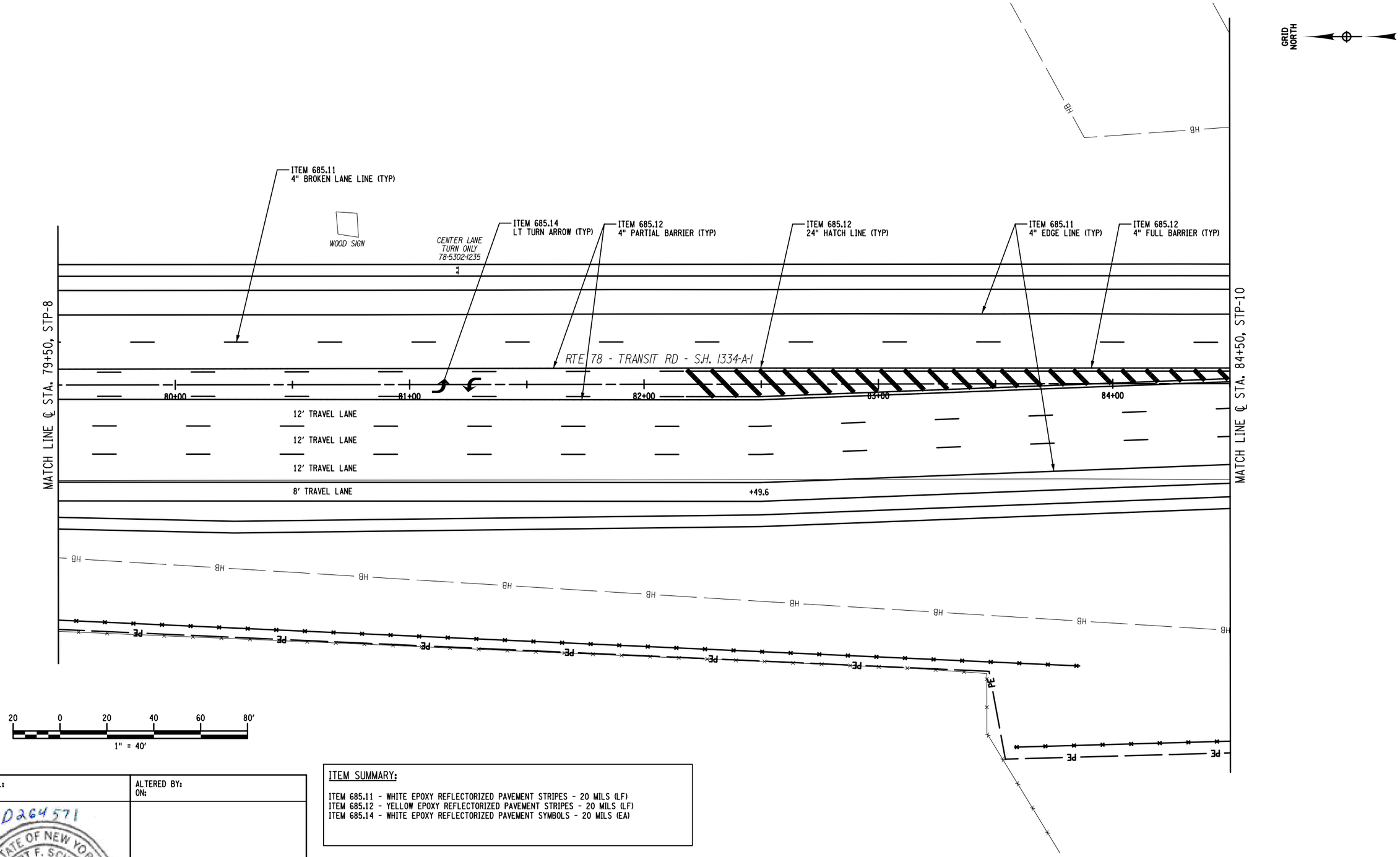

ITEM SUMMARY:

ITEM 685.11 - WHITE EPOXY REFLECTORIZED PAVEMENT STRIPES - 20 MILS (LF)
ITEM 685.12 - YELLOW EPOXY REFLECTORIZED PAVEMENT STRIPES - 20 MILS (LF)
ITEM 685.14 - WHITE EPOXY REFLECTORIZED PAVEMENT SYMBOLS - 20 MILS (EA)

AFFIX SEAL:
ON:

ALTERED BY:
ON:

D264571
STATE OF NEW YORK
ROBERT F. SCHALLER
NO. 082465
LICENSED PROFESSIONAL ENGINEER

AS-BUILT REVISIONS
DESCRIPTION OF ALTERATIONS:

NY 78, TRANSIT ROAD, S.H. 1334A-1
FRENCH ROAD TO WEHRLE DRIVE
TOWNS OF CHEEKTOWAGA & LANCASTER
VILLAGE OF DEPEW
COUNTY: ERIE REGION: 05

PIN 5813.61
NY 78
UTILITY QUALITY LEVEL D

BRIDGES

CULVERTS

ALL DIMENSIONS IN ft UNLESS OTHERWISE NOTED

STRIPING PLANS - SHEET 9
STA. 79+50 TO STA. 84+50

CONTRACT NUMBER
D264571

DRAWING NO. STP-9
SHEET NO. 257

IT IS A VIOLATION OF LAW FOR ANY PERSON, UNLESS THEY ARE ACTING UNDER THE DIRECTION OF A LICENSED PROFESSIONAL ENGINEER, ARCHITECT, LANDSCAPE ARCHITECT, OR LAND SURVEYOR, TO ALTER AN ITEM IN ANY WAY. IF AN ITEM BEARING THE STAMP OF A LICENSED PROFESSIONAL IS ALTERED, THE ALTERING ENGINEER, ARCHITECT, LANDSCAPE ARCHITECT, OR LAND SURVEYOR SHALL STAMP THE DOCUMENT AND INCLUDE THE NOTATION "ALTERED BY" FOLLOWED BY THEIR SIGNATURE, THE DATE OF SUCH ALTERATION, AND A SPECIFIC DESCRIPTION OF THE ALTERATION.

NEW YORK STATE OF OPPORTUNITY. Department of Transportation

DESIGN SUPERVISOR S. S. VAIDYA JOB MANAGER R. F. SCHALLER DESIGN C. L. CRITES CHECK R. F. SCHALLER DRAFTING C. L. CRITES CHECK R. F. SCHALLER PROJECT MANAGER S. S. VAIDYA

FILE NAME = 581361_CPH_HWY_STP-9.dgn
DATE/TIME = 22-JUN-2021 12:45
USER = corites

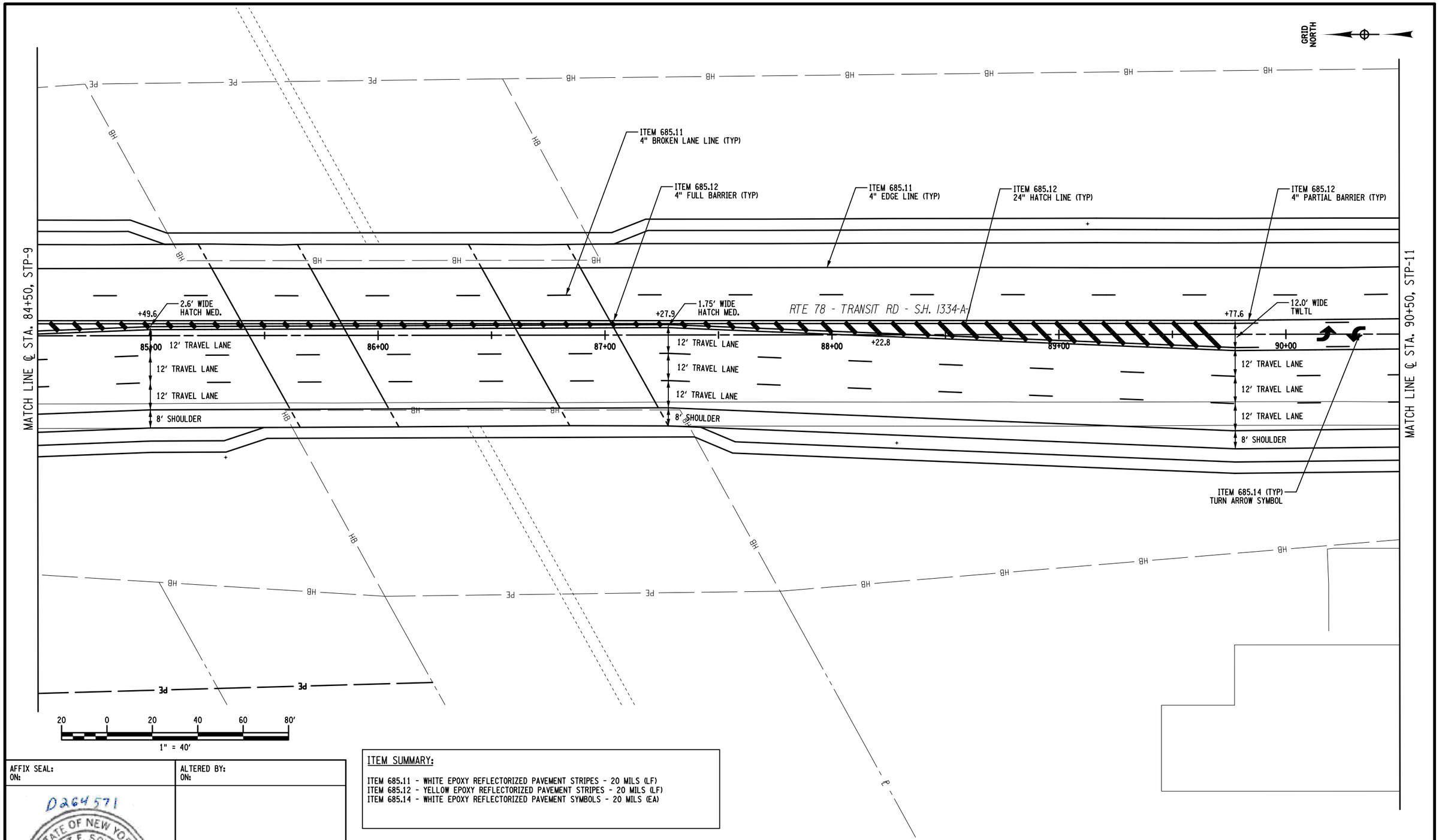

ITEM SUMMARY:

ITEM 685.11 - WHITE EPOXY REFLECTORIZED PAVEMENT STRIPES - 20 MILS (LF)
ITEM 685.12 - YELLOW EPOXY REFLECTORIZED PAVEMENT STRIPES - 20 MILS (LF)
ITEM 685.14 - WHITE EPOXY REFLECTORIZED PAVEMENT SYMBOLS - 20 MILS (EA)

AFFIX SEAL:
ON:

ALTERED BY:
ON:

D264571
STATE OF NEW YORK
ROBERT F. SCHALLER
LICENSED PROFESSIONAL ENGINEER
NO. 082465

AS-BUILT REVISIONS
DESCRIPTION OF ALTERATIONS:

NY 78, TRANSIT ROAD, S.H. 1334A-1
FRENCH ROAD TO WEHRLE DRIVE
TOWNS OF CHEEKTOWAGA & LANCASTER
VILLAGE OF DEPEW
COUNTY: ERIE REGION: 05

PIN 5813.61
NY 78
UTILITY QUALITY LEVEL D

BRIDGES

CULVERTS

ALL DIMENSIONS IN ft UNLESS OTHERWISE NOTED

STRIPING PLANS - SHEET 10
STA. 84+50 TO STA. 90+50

CONTRACT NUMBER
D264571

DRAWING NO. STP-10
SHEET NO. 258

IT IS A VIOLATION OF LAW FOR ANY PERSON, UNLESS THEY ARE ACTING UNDER THE DIRECTION OF A LICENSED PROFESSIONAL ENGINEER, ARCHITECT, LANDSCAPE ARCHITECT, OR LAND SURVEYOR, TO ALTER AN ITEM IN ANY WAY. IF AN ITEM BEARING THE STAMP OF A LICENSED PROFESSIONAL IS ALTERED, THE ALTERING ENGINEER, ARCHITECT, LANDSCAPE ARCHITECT, OR LAND SURVEYOR SHALL STAMP THE DOCUMENT AND INCLUDE THE NOTATION "ALTERED BY" FOLLOWED BY THEIR SIGNATURE, THE DATE OF SUCH ALTERATION, AND A SPECIFIC DESCRIPTION OF THE ALTERATION.

NEW YORK STATE OF OPPORTUNITY. Department of Transportation

PROJECT MANAGER S. S. VAIDYA
CHECK R. F. SCHALLER
DRAFTING C. L. CRITES
CHECK R. F. SCHALLER
DESIGN C. L. CRITES
JOB MANAGER R. F. SCHALLER
DESIGN SUPERVISOR S. S. VAIDYA
FILE NAME = 581361_CPH_HWY_STP-10.dgn
DATE/TIME = 22-JUN-2021 12:45
USER = ccrites

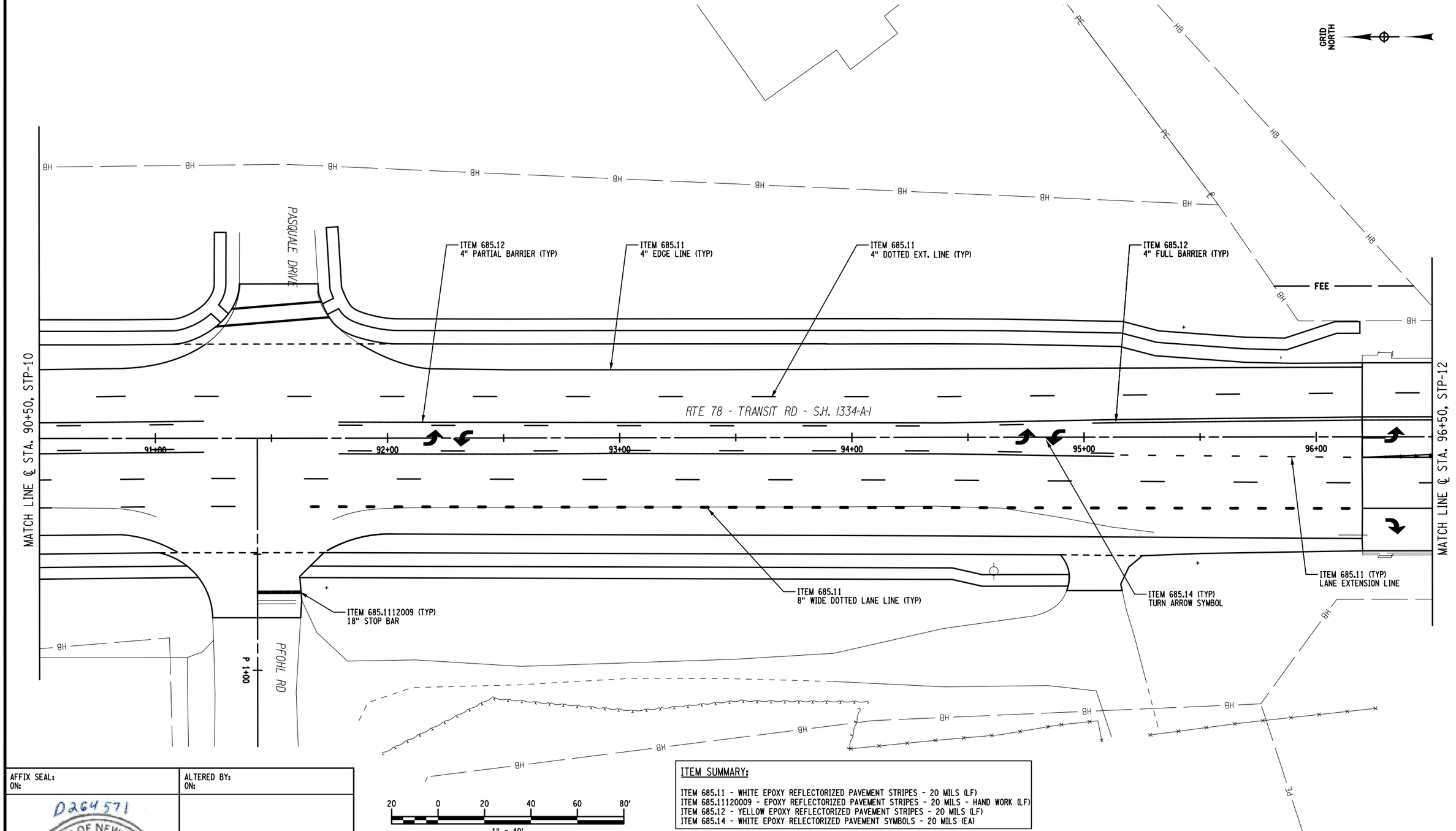

ITEM SUMMARY:

ITEM 685.11 - WHITE EPOXY REFLECTORIZED PAVEMENT STRIPES - 20 MILS (LF)
ITEM 685.11120009 - EPOXY REFLECTORIZED PAVEMENT STRIPES - 20 MILS - HAND WORK (LF)
ITEM 685.12 - YELLOW EPOXY REFLECTORIZED PAVEMENT STRIPES - 20 MILS (LF)
ITEM 685.14 - WHITE EPOXY RELECTORIZED PAVEMENT SYMBOLS - 20 MILS (EA)

AFFIX SEAL:
ON:

D264571
STATE OF NEW YORK
ROBERT F. SCHALLER
NO. 082465
LICENSED PROFESSIONAL ENGINEER

ALTERED BY:
ON:

AS-BUILT REVISIONS
DESCRIPTION OF ALTERATIONS:

NY 78, TRANSIT ROAD, S.H. 1334A-1	PIN 5813.61	BRIDGES	CULVERTS	ALL DIMENSIONS IN ft UNLESS OTHERWISE NOTED
FRENCH ROAD TO WEHRLE DRIVE	NY 78			STRIPING PLANS - SHEET 11
TOWNS OF CHEEKTOWAGA & LANCASTER	UTILITY QUALITY LEVEL D			STA. 90+50 TO STA. 96+50
VILLAGE OF DEPEW				
COUNTY: ERIE REGION: 05				

CONTRACT NUMBER
D264571
DRAWING NO. STP-11
SHEET NO. 259

IT IS A VIOLATION OF LAW FOR ANY PERSON, UNLESS THEY ARE ACTING UNDER THE DIRECTION OF A LICENSED PROFESSIONAL ENGINEER, ARCHITECT, LANDSCAPE ARCHITECT, OR LAND SURVEYOR, TO ALTER AN ITEM IN ANY WAY. IF AN ITEM BEARING THE STAMP OF A LICENSED PROFESSIONAL IS ALTERED, THE ALTERING ENGINEER, ARCHITECT, LANDSCAPE ARCHITECT, OR LAND SURVEYOR SHALL STAMP THE DOCUMENT AND INCLUDE THE NOTATION "ALTERED BY" FOLLOWED BY THEIR SIGNATURE, THE DATE OF SUCH ALTERATION, AND A SPECIFIC DESCRIPTION OF THE ALTERATION.

NEW YORK STATE OF OPPORTUNITY. Department of Transportation

DESIGN SUPERVISOR S. S. VAIDYA JOB MANAGER R. F. SCHALLER DESIGN C. L. CRITES CHECK R. F. SCHALLER DRAFTING C. L. CRITES CHECK R. F. SCHALLER PROJECT MANAGER S. S. VAIDYA

FILE NAME = 581361_CPH_HWY_STP-11.dgn
DATE/TIME = 22-JUN-2021 12:45
USER = ccrites

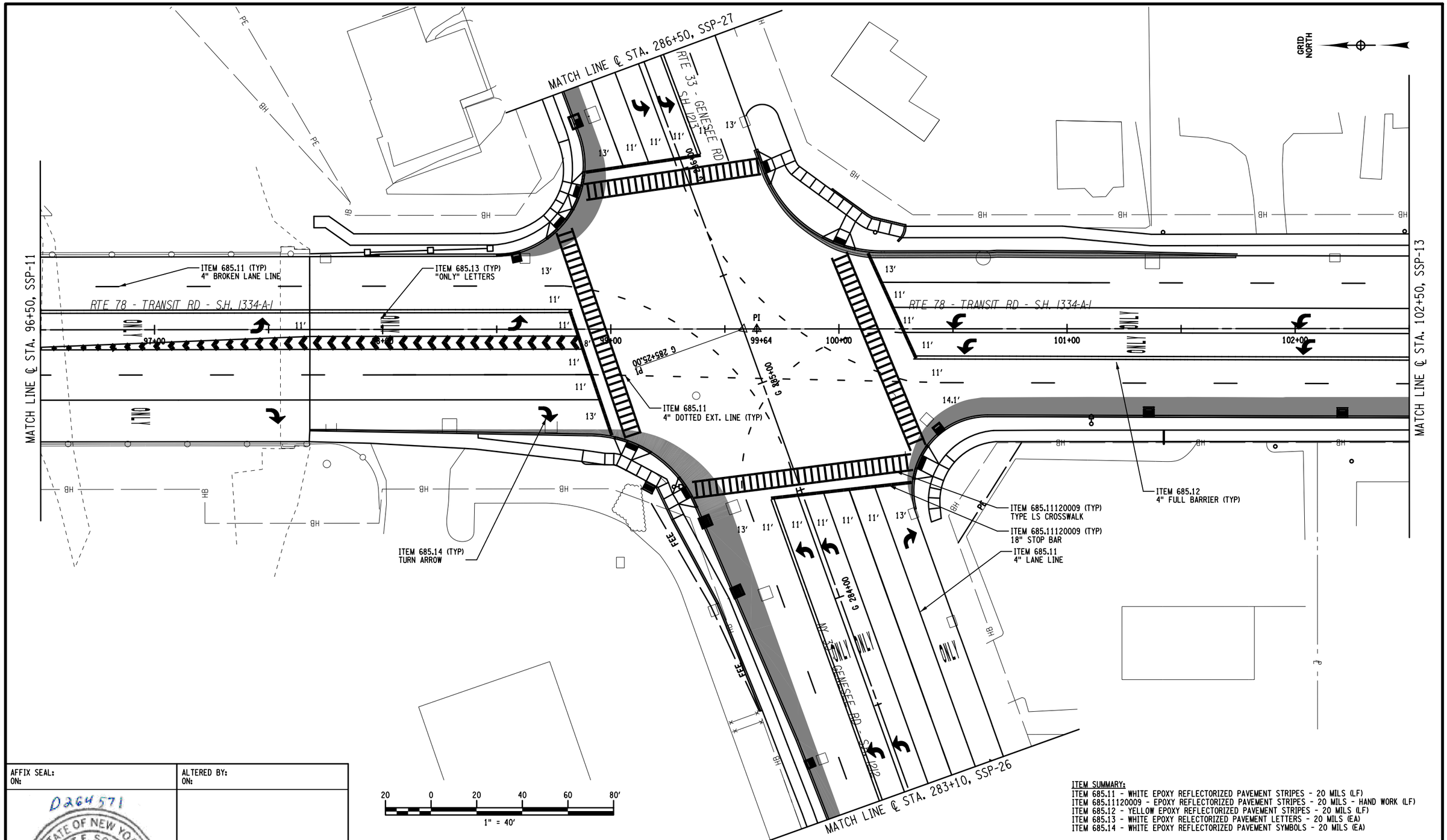

ITEM SUMMARY:
ITEM 685.11 - WHITE EPOXY REFLECTORIZED PAVEMENT STRIPES - 20 MILS (LF)
ITEM 685.11120009 - EPOXY REFLECTORIZED PAVEMENT STRIPES - 20 MILS - HAND WORK (LF)
ITEM 685.12 - YELLOW EPOXY REFLECTORIZED PAVEMENT STRIPES - 20 MILS (LF)
ITEM 685.13 - WHITE EPOXY RELECTORIZED PAVEMENT LETTERS - 20 MILS (EA)
ITEM 685.14 - WHITE EPOXY REFLECTORIZED PAVEMENT SYMBOLS - 20 MILS (EA)

AFFIX SEAL:
ON:

D264571
STATE OF NEW YORK
ROBERT F. SCHALLER
NO. 082465
LICENSED PROFESSIONAL ENGINEER

ALTERED BY:
ON:

AS-BUILT REVISIONS
DESCRIPTION OF ALTERATIONS:

NY 78, TRANSIT ROAD, S.H. 1334A-1
FRENCH ROAD TO WEHRLE DRIVE
TOWNS OF CHEEKTOWAGA & LANCASTER
VILLAGE OF DEPEW
COUNTY: ERIE REGION: 05

PIN 5813.61
NY 78
UTILITY QUALITY LEVEL D

BRIDGES

CULVERTS

ALL DIMENSIONS IN ft UNLESS OTHERWISE NOTED

SIGN & STRIPING PLAN 12
STA. 96+50 TO STA. 102+50

CONTRACT NUMBER
D264571

DRAWING NO. STP-12
SHEET NO. 260

IT IS A VIOLATION OF LAW FOR ANY PERSON, UNLESS THEY ARE ACTING UNDER THE DIRECTION OF A LICENSED PROFESSIONAL ENGINEER, ARCHITECT, LANDSCAPE ARCHITECT, OR LAND SURVEYOR, TO ALTER AN ITEM IN ANY WAY. IF AN ITEM BEARING THE STAMP OF A LICENSED PROFESSIONAL IS ALTERED, THE ALTERING ENGINEER, ARCHITECT, LANDSCAPE ARCHITECT, OR LAND SURVEYOR SHALL STAMP THE DOCUMENT AND INCLUDE THE NOTATION "ALTERED BY" FOLLOWED BY THEIR SIGNATURE, THE DATE OF SUCH ALTERATION, AND A SPECIFIC DESCRIPTION OF THE ALTERATION.

NEW YORK STATE OF OPPORTUNITY. Department of Transportation

PROJECT MANAGER S. S. VAIDYA
CHECK R. F. SCHALLER
DRAFTING C. L. CRITES
CHECK R. F. SCHALLER
DESIGN C. L. CRITES
JOB MANAGER R. F. SCHALLER
DESIGN SUPERVISOR S. S. VAIDYA

FILE NAME = 581361_CPH_HWY_STP-12.dgn
DATE/TIME = 22-JUN-2021 12:45
USER = corites

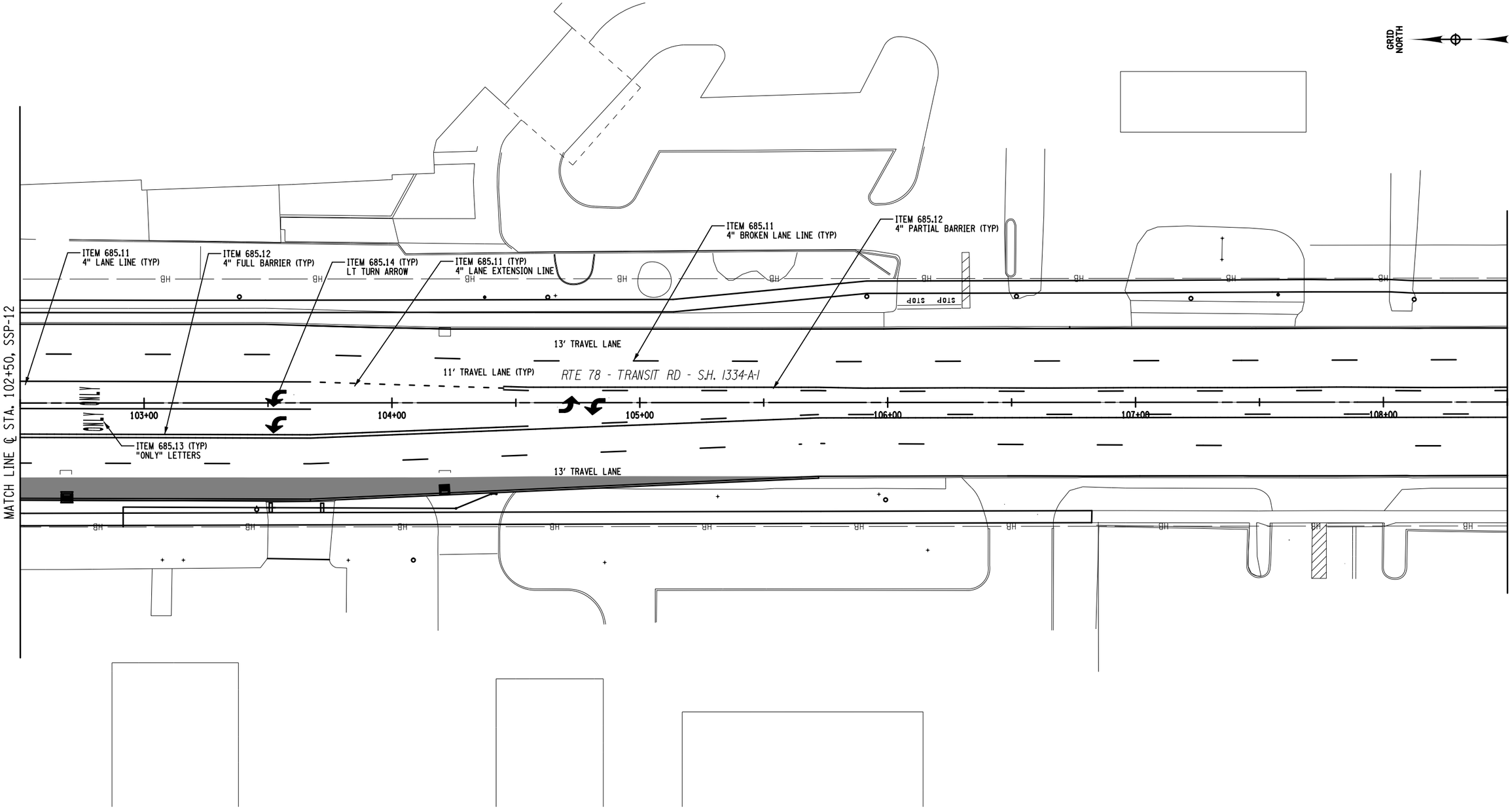

20 0 20 40 60 80'

1" = 40'

ITEM SUMMARY:

ITEM 685.11 - WHITE EPOXY REFLECTORIZED PAVEMENT STRIPES - 20 MILS (LF)
ITEM 685.12 - YELLOW EPOXY REFLECTORIZED PAVEMENT STRIPES - 20 MILS (LF))
ITEM 685.13 - WHITE EPOXY REFLECTORIZED PAVEMENT LETTERS - 20 MILS (EA)
ITEM 685.14 - WHITE EPOXY REFLECTORIZED PAVEMENT SYMBOLS - 20 MILS (EA)

AFFIX SEAL:
ON:

D264571
STATE OF NEW YORK
ROBERT F. SCHALLER
LICENSED PROFESSIONAL ENGINEER
NO. 082465

ALTERED BY:
ON:

AS-BUILT REVISIONS
DESCRIPTION OF ALTERATIONS:

NY 78, TRANSIT ROAD, S.H. 1334A-1
FRENCH ROAD TO WEHRLE DRIVE
TOWNS OF CHEEKTOWAGA & LANCASTER
VILLAGE OF DEPEW
COUNTY: ERIE REGION: 05

PIN 5813.61
NY 78
UTILITY QUALITY LEVEL D

BRIDGES

CULVERTS

ALL DIMENSIONS IN ft UNLESS OTHERWISE NOTED

SIGN & STRIPING PLAN 13
STA. 102+50 TO STA. 108+50

CONTRACT NUMBER
D264571

DRAWING NO. STP-13
SHEET NO. 261

IT IS A VIOLATION OF LAW FOR ANY PERSON, UNLESS THEY ARE ACTING UNDER THE DIRECTION OF A LICENSED PROFESSIONAL ENGINEER, ARCHITECT, LANDSCAPE ARCHITECT, OR LAND SURVEYOR, TO ALTER AN ITEM IN ANY WAY. IF AN ITEM BEARING THE STAMP OF A LICENSED PROFESSIONAL IS ALTERED, THE ALTERING ENGINEER, ARCHITECT, LANDSCAPE ARCHITECT, OR LAND SURVEYOR SHALL STAMP THE DOCUMENT AND INCLUDE THE NOTATION "ALTERED BY" FOLLOWED BY THEIR SIGNATURE, THE DATE OF SUCH ALTERATION, AND A SPECIFIC DESCRIPTION OF THE ALTERATION.

NEW YORK STATE OF OPPORTUNITY. Department of Transportation

PROJECT MANAGER S. S. VAIDYA
CHECK R. F. SCHALLER
DRAFTING C. L. CRITES
CHECK R. F. SCHALLER
DESIGN C. L. CRITES
JOB MANAGER R. F. SCHALLER
DESIGN SUPERVISOR S. S. VAIDYA

FILE NAME = 581361_CPH_HWY_STP-13.dgn
DATE/TIME = 22-JUN-2021 12:46
USER = cortes

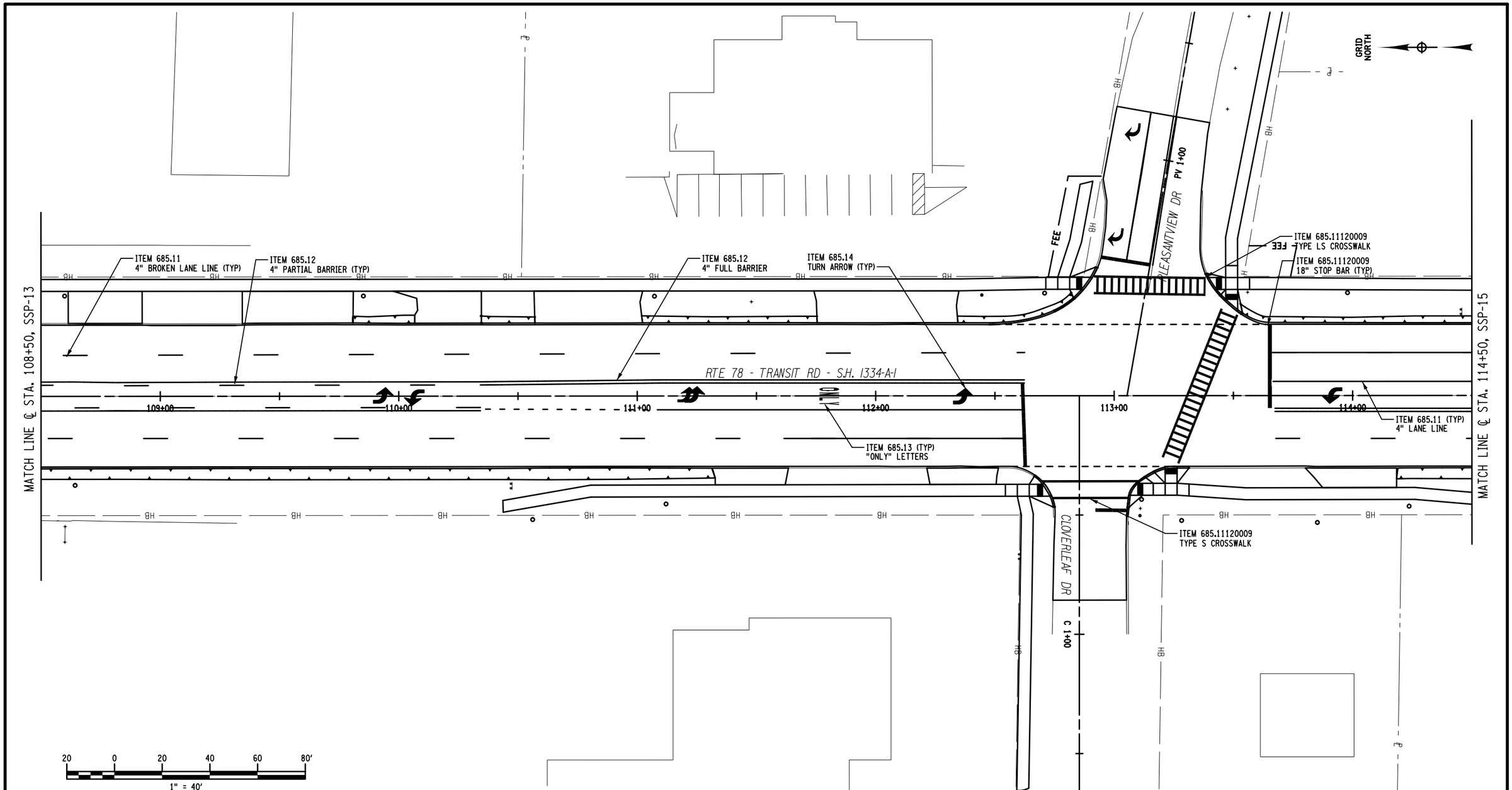

AFFIX SEAL:
ON:

ALTERED BY:
ON:

D264571
STATE OF NEW YORK
ROBERT F. SCHALLER
LICENSED PROFESSIONAL ENGINEER
NO. 082465

ITEM SUMMARY:
ITEM 685.11 - WHITE EPOXY REFLECTORIZED PAVEMENT STRIPES - 20 MILS (LF)
ITEM 685.11120009 - EPOXY REFLECTORIZED PAVEMENT STRIPES - 20 MILS - HAND WORK (LF)
ITEM 685.12 - YELLOW EPOXY REFLECTORIZED PAVEMENT STRIPES - 20 MILS (LF)
ITEM 685.13 - WHITE EPOXY RELECTORIZED PAVEMENT LETTERS - 20 MILS (EA)
ITEM 685.14 - WHITE EPOXY REFLECTORIZED PAVEMENT SYMBOLS - 20 MILS (EA)

AS-BUILT REVISIONS
DESCRIPTION OF ALTERATIONS:

NY 78, TRANSIT ROAD, S.H. 1334A-1
FRENCH ROAD TO WEHRLE DRIVE
TOWNS OF CHEEKTOWAGA & LANCASTER
VILLAGE OF DEPEW
COUNTY: ERIE REGION: 05

PIN 5813.61
NY 78
UTILITY QUALITY LEVEL D

BRIDGES

CULVERTS

ALL DIMENSIONS IN ft UNLESS OTHERWISE NOTED

SIGN & STRIPING PLAN 14
STA. 108+50 TO STA. 114+50

CONTRACT NUMBER
D264571

DRAWING NO. STP-14
SHEET NO. 262

IT IS A VIOLATION OF LAW FOR ANY PERSON, UNLESS THEY ARE ACTING UNDER THE DIRECTION OF A LICENSED PROFESSIONAL ENGINEER, ARCHITECT, LANDSCAPE ARCHITECT, OR LAND SURVEYOR, TO ALTER AN ITEM IN ANY WAY. IF AN ITEM BEARING THE STAMP OF A LICENSED PROFESSIONAL IS ALTERED, THE ALTERING ENGINEER, ARCHITECT, LANDSCAPE ARCHITECT, OR LAND SURVEYOR SHALL STAMP THE DOCUMENT AND INCLUDE THE NOTATION "ALTERED BY" FOLLOWED BY THEIR SIGNATURE, THE DATE OF SUCH ALTERATION, AND A SPECIFIC DESCRIPTION OF THE ALTERATION.

NEW YORK STATE OF OPPORTUNITY. Department of Transportation

PROJECT MANAGER S. S. VAIDYA
CHECK R. F. SCHALLER
DRAFTING C. L. CRITES
CHECK R. F. SCHALLER
DESIGN C. L. CRITES
CHECK R. F. SCHALLER
JOB MANAGER R. F. SCHALLER
DESIGN SUPERVISOR S. S. VAIDYA

FILE NAME = 581361_CPH_HWY_STP-14.dgn
DATE/TIME = 22-JUN-2021 12:46
USER = ccrites

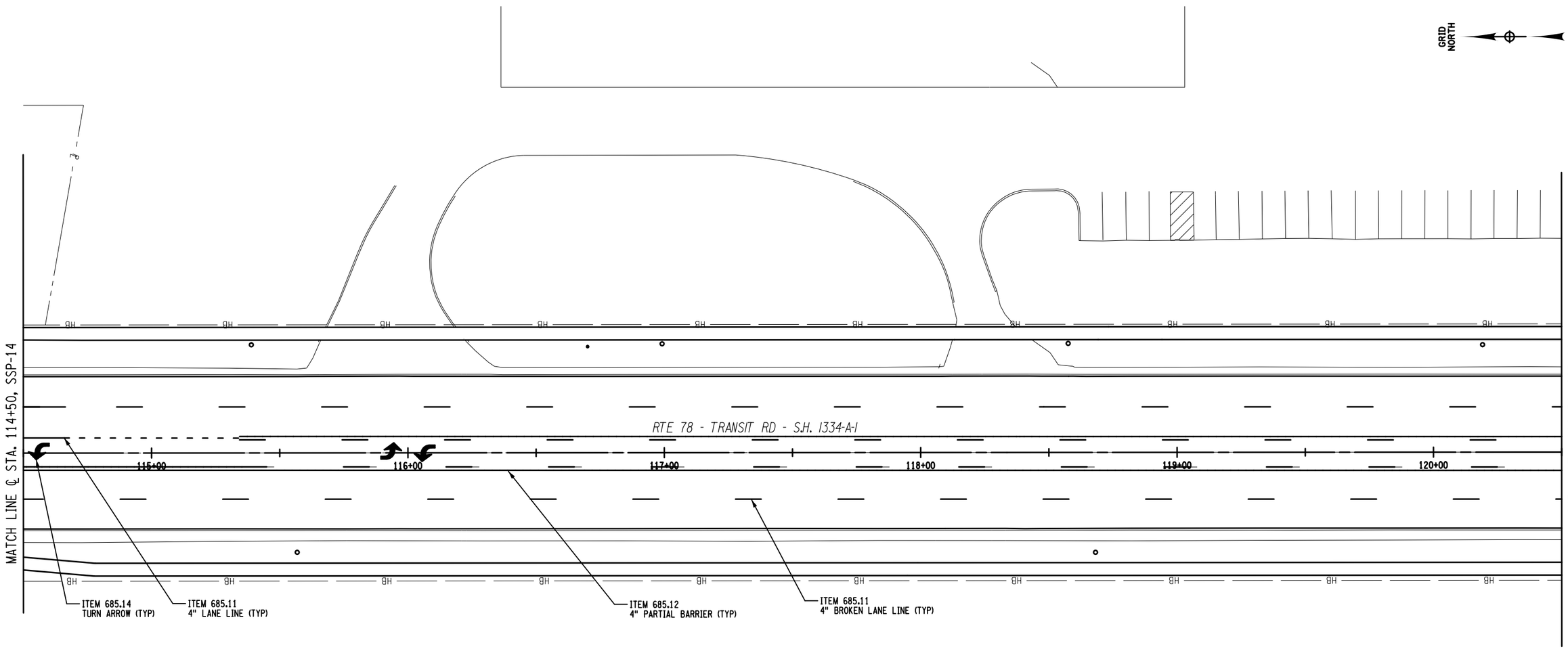

20 0 20 40 60 80′

1" = 40′

AFFIX SEAL: ON:	ALTERED BY: ON:
D264571 STATE OF NEW YORK ROBERT F. SCHALLER LICENSED PROFESSIONAL ENGINEER NO. 082465	

ITEM SUMMARY:
ITEM 685.11 - WHITE EPOXY REFLECTORIZED PAVEMENT STRIPES - 20 MILS (LF)
ITEM 685.12 - YELLOW EPOXY REFLECTORIZED PAVEMENT STRIPES - 20 MILS (LF)
ITEM 685.14 - WHITE EPOXY REFLECTORIZED PAVEMENT SYMBOLS - 20 MILS (EA)

AS-BUILT REVISIONS DESCRIPTION OF ALTERATIONS:	NY 78, TRANSIT ROAD, S.H. 1334A-1	PIN 5813.61 NY 78 UTILITY QUALITY LEVEL D	BRIDGES	CULVERTS	ALL DIMENSIONS IN ft UNLESS OTHERWISE NOTED	CONTRACT NUMBER D264571
	FRENCH ROAD TO WEHRLE DRIVE				SIGN & STRIPING PLAN 15 STA. 114+50 TO STA. 120+50	DRAWING NO. STP-15
	TOWNS OF CHEEKTOWAGA & LANCASTER					SHEET NO. 263
	VILLAGE OF DEPEW					
	COUNTY: ERIE REGION: 05					

IT IS A VIOLATION OF LAW FOR ANY PERSON, UNLESS THEY ARE ACTING UNDER THE DIRECTION OF A LICENSED PROFESSIONAL ENGINEER, ARCHITECT, LANDSCAPE ARCHITECT, OR LAND SURVEYOR, TO ALTER AN ITEM IN ANY WAY. IF AN ITEM BEARING THE STAMP OF A LICENSED PROFESSIONAL IS ALTERED, THE ALTERING ENGINEER, ARCHITECT, LANDSCAPE ARCHITECT, OR LAND SURVEYOR SHALL STAMP THE DOCUMENT AND INCLUDE THE NOTATION "ALTERED BY" FOLLOWED BY THEIR SIGNATURE, THE DATE OF SUCH ALTERATION, AND A SPECIFIC DESCRIPTION OF THE ALTERATION.

NEW YORK STATE OF OPPORTUNITY. Department of Transportation

DESIGN SUPERVISOR S. S. VAIDYA JOB MANAGER R. F. SCHALLER DESIGN C. L. CRITES CHECK R. F. SCHALLER DRAFTING C. L. CRITES CHECK R. F. SCHALLER PROJECT MANAGER S. S. VAIDYA

FILE NAME = 581361_CPH_HWY_STP-15.dgn
DATE/TIME = 22-JUN-2021 12:46
USER = crites

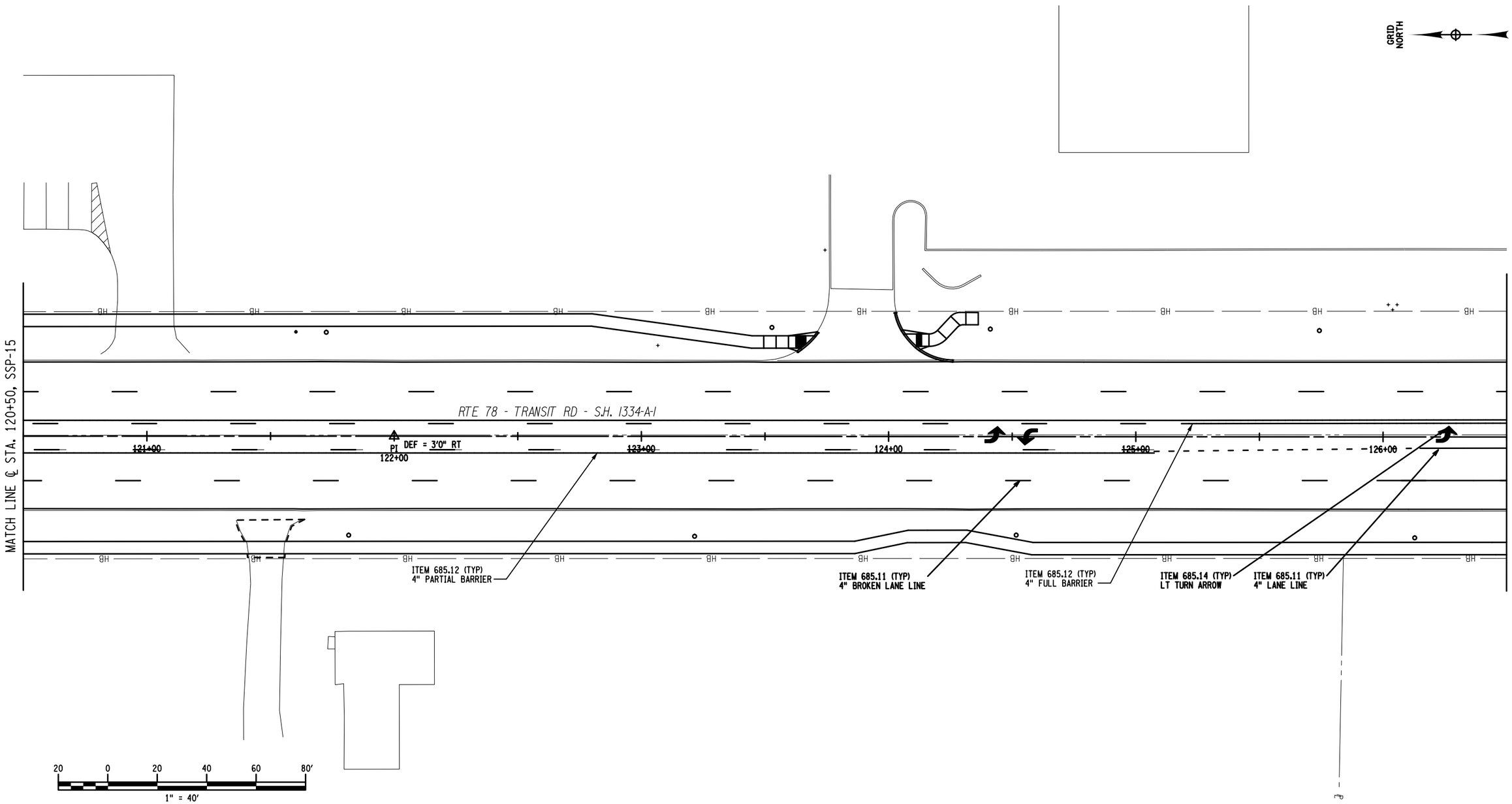

PROJECT MANAGER S. S. VAIDYA
CHECK R. F. SCHALLER
DRAFTING C. L. CRITES
CHECK R. F. SCHALLER
DESIGN C. L. CRITES
JOB MANAGER R. F. SCHALLER
DESIGN SUPERVISOR S. S. VAIDYA

FILE NAME = 581361_CPH_HWY_STP-16.dgn
DATE/TIME = 22-JUN-2021 12:46
USER = cortes

AFFIX SEAL: ON:	ALTERED BY: ON:
D264571 STATE OF NEW YORK ROBERT F. SCHALLER NO. 082465 LICENSED PROFESSIONAL ENGINEER	

ITEM SUMMARY:
ITEM 685.11 - WHITE EPOXY REFLECTORIZED PAVEMENT STRIPES - 20 MILS (LF)
ITEM 685.12 - YELLOW EPOXY REFLECTORIZED PAVEMENT STRIPES - 20 MILS (LF)
ITEM 685.14 - WHITE EPOXY REFLECTORIZED PAVEMENT SYMBOLS - 20 MILS (EA)

AS-BUILT REVISIONS DESCRIPTION OF ALTERATIONS:	NY 78, TRANSIT ROAD, S.H. 1334A-1	PIN 5813.61 NY 78 UTILITY QUALITY LEVEL D	BRIDGES	CULVERTS	ALL DIMENSIONS IN ft UNLESS OTHERWISE NOTED	CONTRACT NUMBER D264571
	FRENCH ROAD TO WEHRLE DRIVE				SIGN & STRIPING PLAN 16 STA. 120+50 TO STA. 126+50	DRAWING NO. STP-16
	TOWNS OF CHEEKTOWAGA & LANCASTER					SHEET NO. 264
	VILLAGE OF DEPEW					
	COUNTY: ERIE REGION: 05					

IT IS A VIOLATION OF LAW FOR ANY PERSON, UNLESS THEY ARE ACTING UNDER THE DIRECTION OF A LICENSED PROFESSIONAL ENGINEER, ARCHITECT, LANDSCAPE ARCHITECT, OR LAND SURVEYOR, TO ALTER AN ITEM IN ANY WAY. IF AN ITEM BEARING THE STAMP OF A LICENSED PROFESSIONAL IS ALTERED, THE ALTERING ENGINEER, ARCHITECT, LANDSCAPE ARCHITECT, OR LAND SURVEYOR SHALL STAMP THE DOCUMENT AND INCLUDE THE NOTATION "ALTERED BY" FOLLOWED BY THEIR SIGNATURE, THE DATE OF SUCH ALTERATION, AND A SPECIFIC DESCRIPTION OF THE ALTERATION.

NEW YORK STATE OF OPPORTUNITY. Department of Transportation

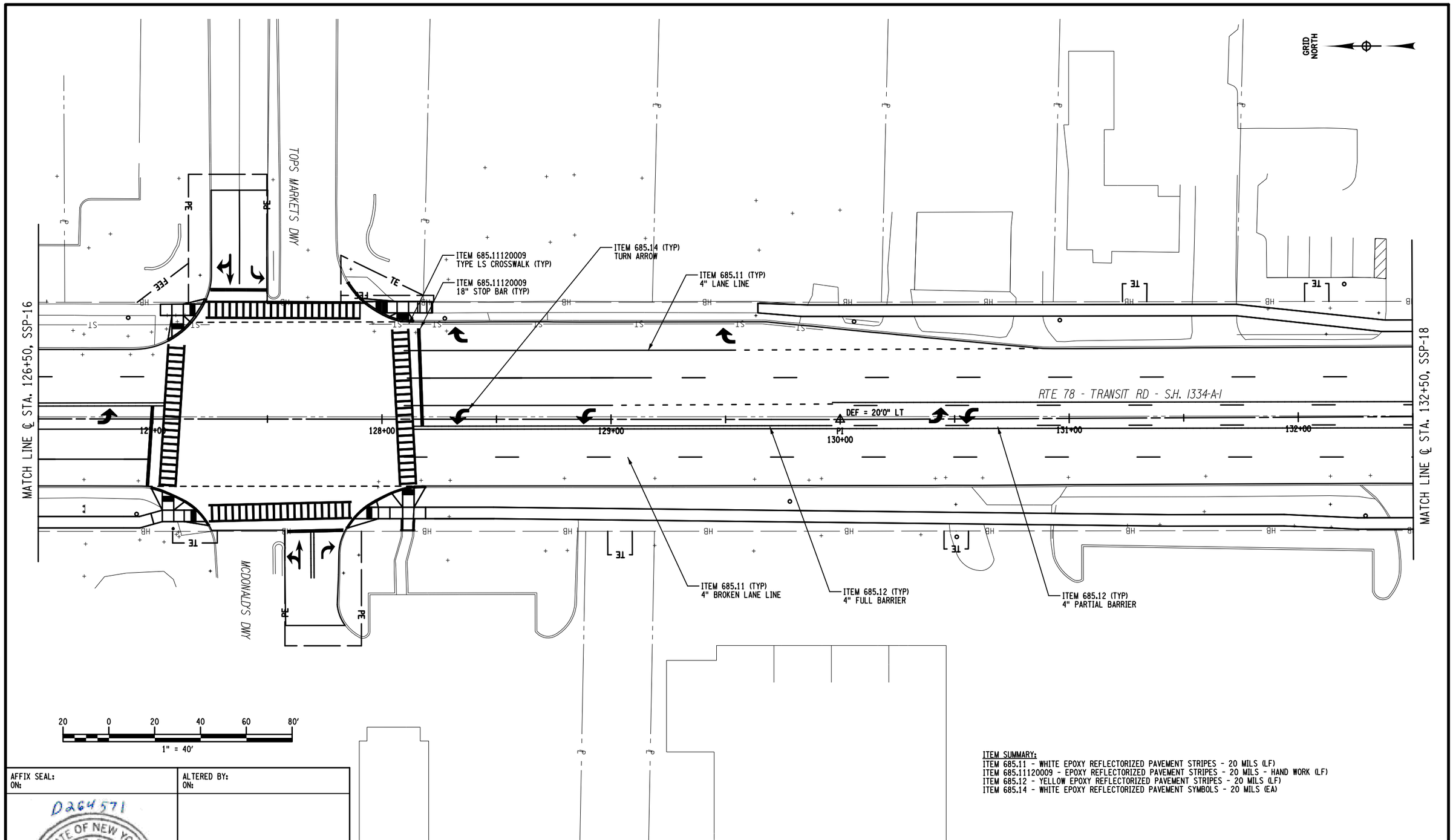

ITEM SUMMARY:
ITEM 685.11 - WHITE EPOXY REFLECTORIZED PAVEMENT STRIPES - 20 MILS (LF)
ITEM 685.11120009 - EPOXY REFLECTORIZED PAVEMENT STRIPES - 20 MILS - HAND WORK (LF)
ITEM 685.12 - YELLOW EPOXY REFLECTORIZED PAVEMENT STRIPES - 20 MILS (LF)
ITEM 685.14 - WHITE EPOXY REFLECTORIZED PAVEMENT SYMBOLS - 20 MILS (EA)

AFFIX SEAL:
ON:

D264571

STATE OF NEW YORK
ROBERT F. SCHALLER
NO. 082465
LICENSED PROFESSIONAL ENGINEER

ALTERED BY:
ON:

AS-BUILT REVISIONS
DESCRIPTION OF ALTERATIONS:

NY 78, TRANSIT ROAD, S.H. 1334A-1	PIN 5813.61	BRIDGES	CULVERTS	ALL DIMENSIONS IN ft UNLESS OTHERWISE NOTED	CONTRACT NUMBER
FRENCH ROAD TO WEHRLE DRIVE	NY 78			SIGN & STRIPING PLAN 17	D264571
TOWNS OF CHEEKTOWAGA & LANCASTER	UTILITY QUALITY LEVEL D			STA. 126+50 TO STA. 132+50	
VILLAGE OF DEPEW					DRAWING NO. STP-17
COUNTY: ERIE REGION: 05					SHEET NO. 265

IT IS A VIOLATION OF LAW FOR ANY PERSON, UNLESS THEY ARE ACTING UNDER THE DIRECTION OF A LICENSED PROFESSIONAL ENGINEER, ARCHITECT, LANDSCAPE ARCHITECT, OR LAND SURVEYOR, TO ALTER AN ITEM IN ANY WAY. IF AN ITEM BEARING THE STAMP OF A LICENSED PROFESSIONAL IS ALTERED, THE ALTERING ENGINEER, ARCHITECT, LANDSCAPE ARCHITECT, OR LAND SURVEYOR SHALL STAMP THE DOCUMENT AND INCLUDE THE NOTATION "ALTERED BY" FOLLOWED BY THEIR SIGNATURE, THE DATE OF SUCH ALTERATION, AND A SPECIFIC DESCRIPTION OF THE ALTERATION.

NEW YORK STATE OF OPPORTUNITY. Department of Transportation

PROJECT MANAGER S. S. VAIDYA
CHECK R. F. SCHALLER
DRAFTING C. L. CRITES
CHECK R. F. SCHALLER
DESIGN C. L. CRITES
JOB MANAGER R. F. SCHALLER
DESIGN SUPERVISOR S. S. VAIDYA

FILE NAME = 581361_CPH_HWY_STP-17.dgn
DATE/TIME = 22-JUN-2021 12:46
USER = ccrites

PROJECT MANAGER S. S. VAIDYA
CHECK R. F. SCHALLER
DRAFTING C. L. CRITES
CHECK R. F. SCHALLER
DESIGN C. L. CRITES
JOB MANAGER R. F. SCHALLER
DESIGN SUPERVISOR S. S. VAIDYA

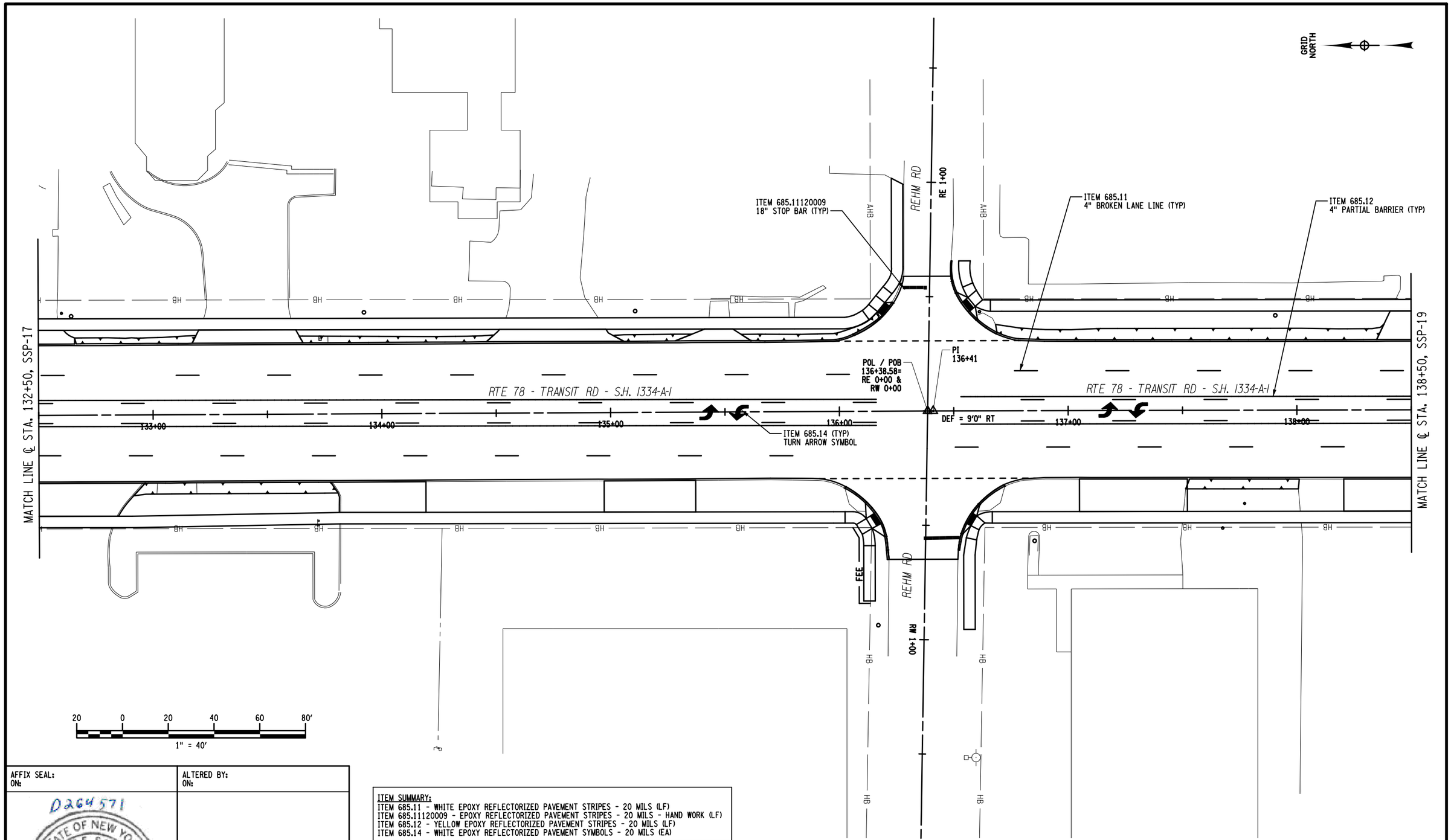

AFFIX SEAL:
ON:

D264571

STATE OF NEW YORK
ROBERT F. SCHALLER
NO. 082465
LICENSED PROFESSIONAL ENGINEER

ALTERED BY:
ON:

ITEM SUMMARY:
ITEM 685.11 - WHITE EPOXY REFLECTORIZED PAVEMENT STRIPES - 20 MILS (LF)
ITEM 685.11120009 - EPOXY REFLECTORIZED PAVEMENT STRIPES - 20 MILS - HAND WORK (LF)
ITEM 685.12 - YELLOW EPOXY REFLECTORIZED PAVEMENT STRIPES - 20 MILS (LF)
ITEM 685.14 - WHITE EPOXY REFLECTORIZED PAVEMENT SYMBOLS - 20 MILS (EA)

AS-BUILT REVISIONS
DESCRIPTION OF ALTERATIONS:

NY 78, TRANSIT ROAD, S.H. 1334A-1
FRENCH ROAD TO WEHRLE DRIVE
TOWNS OF CHEEKTOWAGA & LANCASTER
VILLAGE OF DEPEW
COUNTY: ERIE REGION: 05

PIN 5813.61
NY 78
UTILITY QUALITY LEVEL D

BRIDGES

CULVERTS

ALL DIMENSIONS IN ft UNLESS OTHERWISE NOTED

SIGN & STRIPING PLAN 18
STA. 132+50 TO STA. 138+50

CONTRACT NUMBER
D264571

DRAWING NO. STP-18
SHEET NO. 266

IT IS A VIOLATION OF LAW FOR ANY PERSON, UNLESS THEY ARE ACTING UNDER THE DIRECTION OF A LICENSED PROFESSIONAL ENGINEER, ARCHITECT, LANDSCAPE ARCHITECT, OR LAND SURVEYOR, TO ALTER AN ITEM IN ANY WAY. IF AN ITEM BEARING THE STAMP OF A LICENSED PROFESSIONAL IS ALTERED, THE ALTERING ENGINEER, ARCHITECT, LANDSCAPE ARCHITECT, OR LAND SURVEYOR SHALL STAMP THE DOCUMENT AND INCLUDE THE NOTATION "ALTERED BY" FOLLOWED BY THEIR SIGNATURE, THE DATE OF SUCH ALTERATION, AND A SPECIFIC DESCRIPTION OF THE ALTERATION.

NEW YORK STATE OF OPPORTUNITY. Department of Transportation

FILE NAME = 581361_CPH_HWY_STP-18.dgn
DATE/TIME = 22-JUN-2021 12:46
USER = cartes

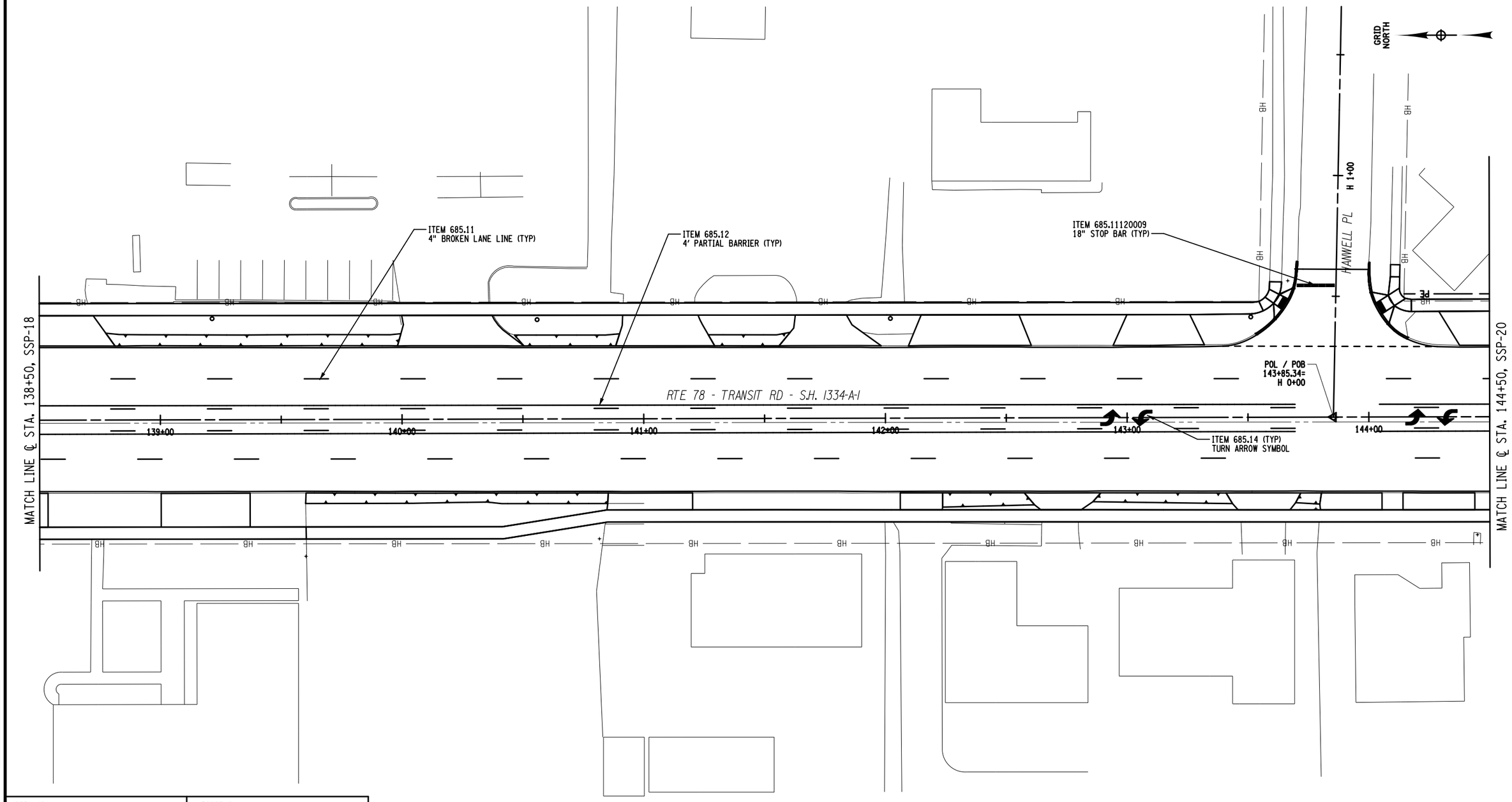

20 0 20 40 60 80'

1" = 40'

ITEM SUMMARY:
ITEM 685.11 - WHITE EPOXY REFLECTORIZED PAVEMENT STRIPES - 20 MILS (LF)
ITEM 685.11120009 - EPOXY REFLECTORIZED PAVEMENT STRIPES - 20 MILS - HAND WORK (LF)
ITEM 685.12 - YELLOW EPOXY REFLECTORIZED PAVEMENT STRIPES - 20 MILS (LF)
ITEM 685.14 - WHITE EPOXY REFLECTORIZED PAVEMENT SYMBOLS - 20 MILS (EA)

AFFIX SEAL:
ON:

D264571
STATE OF NEW YORK
ROBERT F. SCHALLER
NO. 082465
LICENSED PROFESSIONAL ENGINEER

ALTERED BY:
ON:

AS-BUILT REVISIONS
DESCRIPTION OF ALTERATIONS:

NY 78, TRANSIT ROAD, S.H. 1334A-1
FRENCH ROAD TO WEHRLE DRIVE
TOWNS OF CHEEKTOWAGA & LANCASTER
VILLAGE OF DEPEW
COUNTY: ERIE REGION: 05

PIN 5813.61
NY 78
UTILITY QUALITY LEVEL D

BRIDGES

CULVERTS

ALL DIMENSIONS IN ft UNLESS OTHERWISE NOTED

SIGN & STRIPING PLAN 19
STA. 135+50 TO STA. 144+50

CONTRACT NUMBER
D264571

DRAWING NO. STP-19
SHEET NO. 267

IT IS A VIOLATION OF LAW FOR ANY PERSON, UNLESS THEY ARE ACTING UNDER THE DIRECTION OF A LICENSED PROFESSIONAL ENGINEER, ARCHITECT, LANDSCAPE ARCHITECT, OR LAND SURVEYOR, TO ALTER AN ITEM IN ANY WAY. IF AN ITEM BEARING THE STAMP OF A LICENSED PROFESSIONAL IS ALTERED, THE ALTERING ENGINEER, ARCHITECT, LANDSCAPE ARCHITECT, OR LAND SURVEYOR SHALL STAMP THE DOCUMENT AND INCLUDE THE NOTATION "ALTERED BY" FOLLOWED BY THEIR SIGNATURE, THE DATE OF SUCH ALTERATION, AND A SPECIFIC DESCRIPTION OF THE ALTERATION.

NEW YORK STATE OF OPPORTUNITY. Department of Transportation

PROJECT MANAGER S. S. VAIDYA
CHECK R. F. SCHALLER
DRAFTING C. L. CRITES
CHECK R. F. SCHALLER
DESIGN C. L. CRITES
JOB MANAGER R. F. SCHALLER
DESIGN SUPERVISOR S. S. VAIDYA

FILE NAME = 581361_CPH_HWY_STP-19.dgn
DATE/TIME = 22-JUN-2021 12:46
USER = cc rites

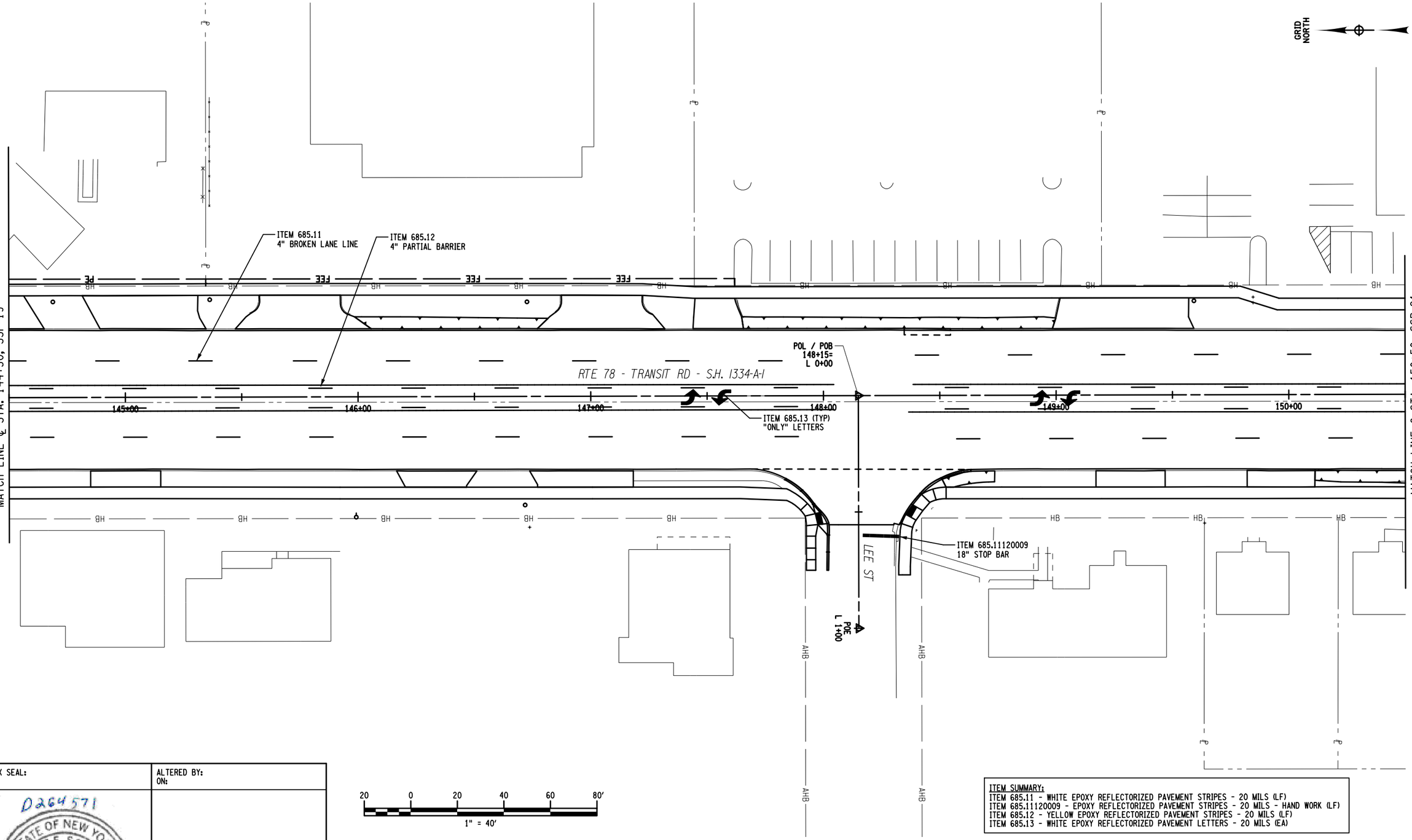

ITEM SUMMARY:
ITEM 685.11 - WHITE EPOXY REFLECTORIZED PAVEMENT STRIPES - 20 MILS (LF)
ITEM 685.11120009 - EPOXY REFLECTORIZED PAVEMENT STRIPES - 20 MILS - HAND WORK (LF)
ITEM 685.12 - YELLOW EPOXY REFLECTORIZED PAVEMENT STRIPES - 20 MILS (LF)
ITEM 685.13 - WHITE EPOXY REFLECTORIZED PAVEMENT LETTERS - 20 MILS (EA)

AFFIX SEAL:
ON:

D264571

STATE OF NEW YORK
ROBERT F. SCHALLER
NO. 082465
LICENSED PROFESSIONAL ENGINEER

ALTERED BY:
ON:

AS-BUILT REVISIONS
DESCRIPTION OF ALTERATIONS:

NY 78, TRANSIT ROAD, S.H. 1334A-1
FRENCH ROAD TO WEHRLE DRIVE
TOWNS OF CHEEKTOWAGA & LANCASTER
VILLAGE OF DEPEW
COUNTY: ERIE REGION: 05

PIN 5813.61
NY 78
UTILITY QUALITY LEVEL D

BRIDGES

CULVERTS

ALL DIMENSIONS IN ft UNLESS OTHERWISE NOTED

SIGN & STRIPING PLAN 20
STA. 144+50 TO STA. 150+50

CONTRACT NUMBER
D264571

DRAWING NO. STP-20
SHEET NO. 268

IT IS A VIOLATION OF LAW FOR ANY PERSON, UNLESS THEY ARE ACTING UNDER THE DIRECTION OF A LICENSED PROFESSIONAL ENGINEER, ARCHITECT, LANDSCAPE ARCHITECT, OR LAND SURVEYOR, TO ALTER AN ITEM IN ANY WAY. IF AN ITEM BEARING THE STAMP OF A LICENSED PROFESSIONAL IS ALTERED, THE ALTERING ENGINEER, ARCHITECT, LANDSCAPE ARCHITECT, OR LAND SURVEYOR SHALL STAMP THE DOCUMENT AND INCLUDE THE NOTATION "ALTERED BY" FOLLOWED BY THEIR SIGNATURE, THE DATE OF SUCH ALTERATION, AND A SPECIFIC DESCRIPTION OF THE ALTERATION.

NEW YORK STATE OF OPPORTUNITY. Department of Transportation

PROJECT MANAGER S. S. VAIDYA
CHECK R. F. SCHALLER
DRAFTING C. L. CRITES
CHECK R. F. SCHALLER
DESIGN C. L. CRITES
JOB MANAGER R. F. SCHALLER
DESIGN SUPERVISOR S. S. VAIDYA

FILE NAME = 581361_CPH_HWY_STP-20.dgn
DATE/TIME = 22-JUN-2021 12:46
USER = cc rites

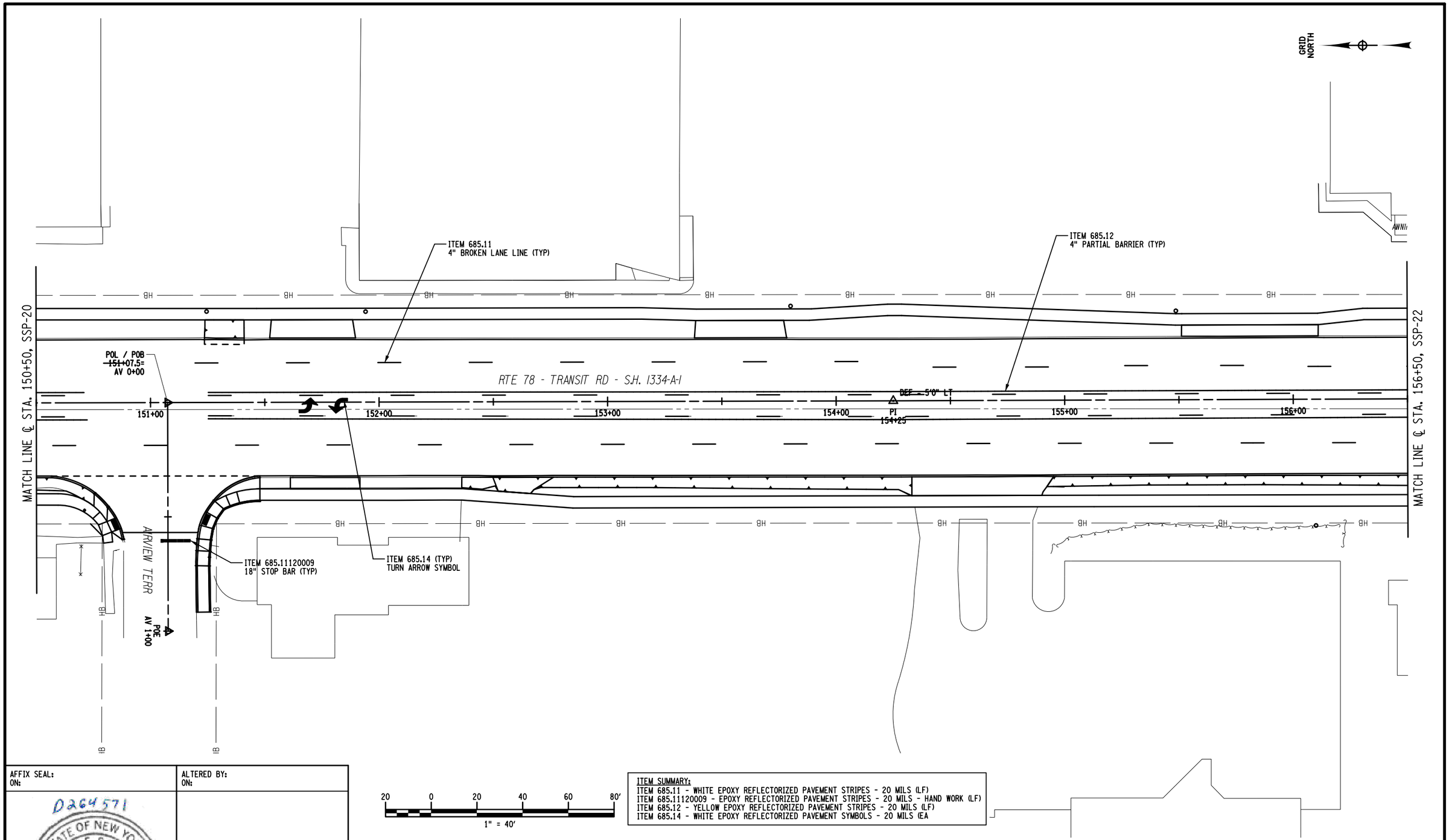

20 0 20 40 60 80'

1" = 40'

ITEM SUMMARY:
ITEM 685.11 - WHITE EPOXY REFLECTORIZED PAVEMENT STRIPES - 20 MILS (LF)
ITEM 685.11120009 - EPOXY REFLECTORIZED PAVEMENT STRIPES - 20 MILS - HAND WORK (LF)
ITEM 685.12 - YELLOW EPOXY REFLECTORIZED PAVEMENT STRIPES - 20 MILS (LF)
ITEM 685.14 - WHITE EPOXY REFLECTORIZED PAVEMENT SYMBOLS - 20 MILS (EA

AFFIX SEAL:
ON:

D264571

STATE OF NEW YORK
ROBERT F. SCHALLER
LICENSED PROFESSIONAL ENGINEER
NO. 082465

ALTERED BY:
ON:

AS-BUILT REVISIONS
DESCRIPTION OF ALTERATIONS:

NY 78, TRANSIT ROAD, S.H. 1334A-1
FRENCH ROAD TO WEHRLE DRIVE
TOWNS OF CHEEKTOWAGA & LANCASTER
VILLAGE OF DEPEW
COUNTY: ERIE REGION: 05

PIN 5813.61
NY 78
UTILITY QUALITY LEVEL D

BRIDGES

CULVERTS

ALL DIMENSIONS IN ft UNLESS OTHERWISE NOTED

SIGN & STRIPING PLAN 21
STA. 150+50 TO STA. 156+50

CONTRACT NUMBER
D264571

DRAWING NO. STP-21
SHEET NO. 269

IT IS A VIOLATION OF LAW FOR ANY PERSON, UNLESS THEY ARE ACTING UNDER THE DIRECTION OF A LICENSED PROFESSIONAL ENGINEER, ARCHITECT, LANDSCAPE ARCHITECT, OR LAND SURVEYOR, TO ALTER AN ITEM IN ANY WAY. IF AN ITEM BEARING THE STAMP OF A LICENSED PROFESSIONAL IS ALTERED, THE ALTERING ENGINEER, ARCHITECT, LANDSCAPE ARCHITECT, OR LAND SURVEYOR SHALL STAMP THE DOCUMENT AND INCLUDE THE NOTATION "ALTERED BY" FOLLOWED BY THEIR SIGNATURE, THE DATE OF SUCH ALTERATION, AND A SPECIFIC DESCRIPTION OF THE ALTERATION.

NEW YORK STATE OF OPPORTUNITY. Department of Transportation

PROJECT MANAGER S. S. VAIDYA
CHECK R. F. SCHALLER
DRAFTING C. L. CRITES
CHECK R. F. SCHALLER
DESIGN C. L. CRITES
JOB MANAGER R. F. SCHALLER
DESIGN SUPERVISOR S. S. VAIDYA

FILE NAME = 581361_CPH_HWY_STP-21.dgn
DATE/TIME = 22-JUN-2021 12:46
USER = cc rites

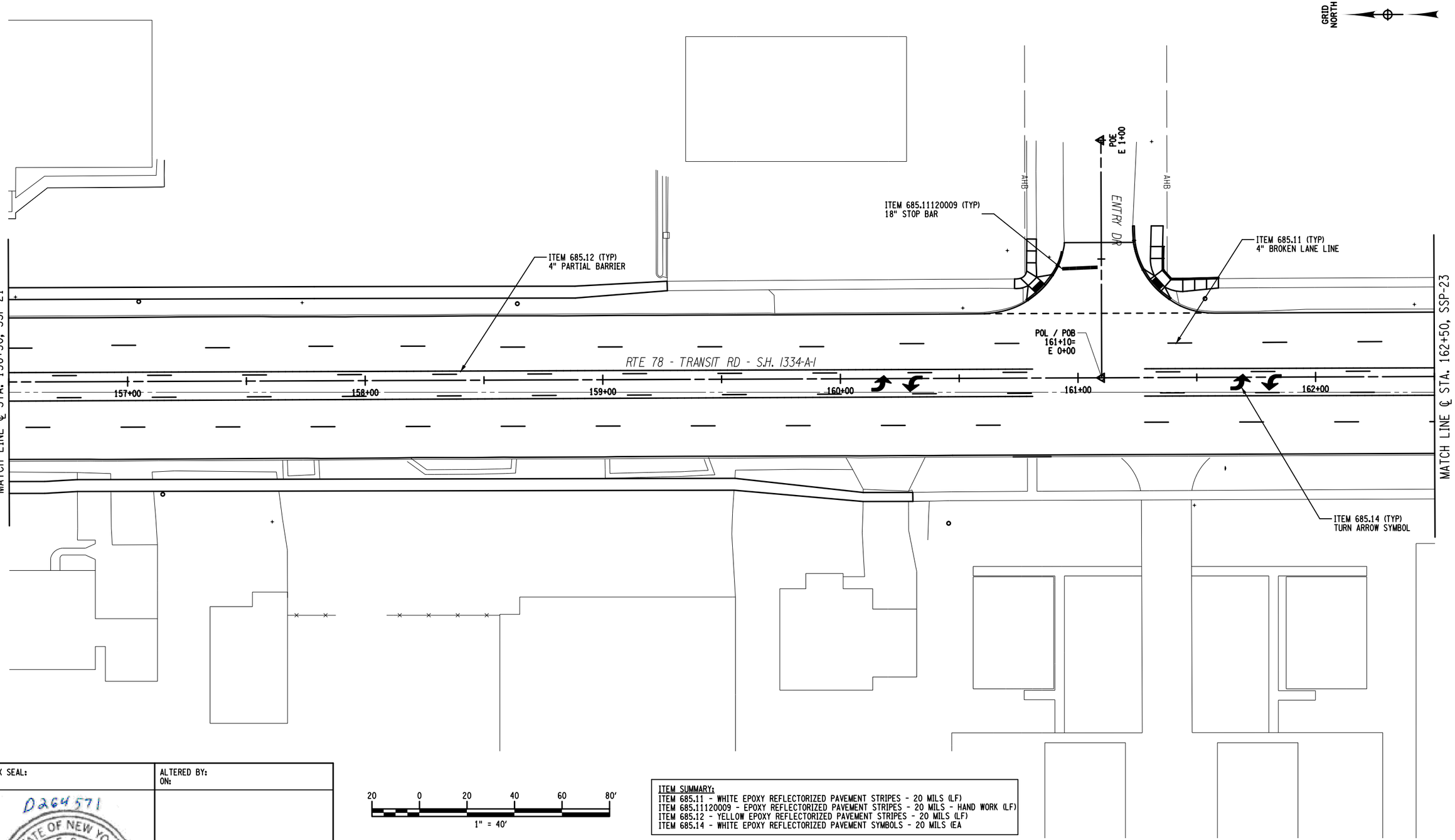

20 0 20 40 60 80′

1" = 40′

ITEM SUMMARY:
ITEM 685.11 - WHITE EPOXY REFLECTORIZED PAVEMENT STRIPES - 20 MILS (LF)
ITEM 685.11120009 - EPOXY REFLECTORIZED PAVEMENT STRIPES - 20 MILS - HAND WORK (LF)
ITEM 685.12 - YELLOW EPOXY REFLECTORIZED PAVEMENT STRIPES - 20 MILS (LF)
ITEM 685.14 - WHITE EPOXY REFLECTORIZED PAVEMENT SYMBOLS - 20 MILS (EA

AFFIX SEAL:
ON:

D264571

STATE OF NEW YORK
ROBERT F. SCHALLER
NO. 082465
LICENSED PROFESSIONAL ENGINEER

ALTERED BY:
ON:

AS-BUILT REVISIONS
DESCRIPTION OF ALTERATIONS:

NY 78, TRANSIT ROAD, S.H. 1334A-1
FRENCH ROAD TO WEHRLE DRIVE
TOWNS OF CHEEKTOWAGA & LANCASTER
VILLAGE OF DEPEW
COUNTY: ERIE REGION: 05

PIN 5813.61
NY 78
UTILITY QUALITY LEVEL D

BRIDGES

CULVERTS

ALL DIMENSIONS IN ft UNLESS OTHERWISE NOTED

SIGN & STRIPING PLAN 22
STA. 156+50 TO STA. 162+50

CONTRACT NUMBER
D264571

DRAWING NO. STP-22
SHEET NO. 270

IT IS A VIOLATION OF LAW FOR ANY PERSON, UNLESS THEY ARE ACTING UNDER THE DIRECTION OF A LICENSED PROFESSIONAL ENGINEER, ARCHITECT, LANDSCAPE ARCHITECT, OR LAND SURVEYOR, TO ALTER AN ITEM IN ANY WAY. IF AN ITEM BEARING THE STAMP OF A LICENSED PROFESSIONAL IS ALTERED, THE ALTERING ENGINEER, ARCHITECT, LANDSCAPE ARCHITECT, OR LAND SURVEYOR SHALL STAMP THE DOCUMENT AND INCLUDE THE NOTATION "ALTERED BY" FOLLOWED BY THEIR SIGNATURE, THE DATE OF SUCH ALTERATION, AND A SPECIFIC DESCRIPTION OF THE ALTERATION.

NEW YORK STATE OF OPPORTUNITY. Department of Transportation

DESIGN SUPERVISOR S. S. VAIDYA JOB MANAGER R. F. SCHALLER DESIGN C. L. CRITES CHECK R. F. SCHALLER DRAFTING C. L. CRITES CHECK R. F. SCHALLER PROJECT MANAGER S. S. VAIDYA

FILE NAME = 581361_CPH_HWY_STP-22.dgn
DATE/TIME = 22-JUN-2021 12:46
USER = ccrites

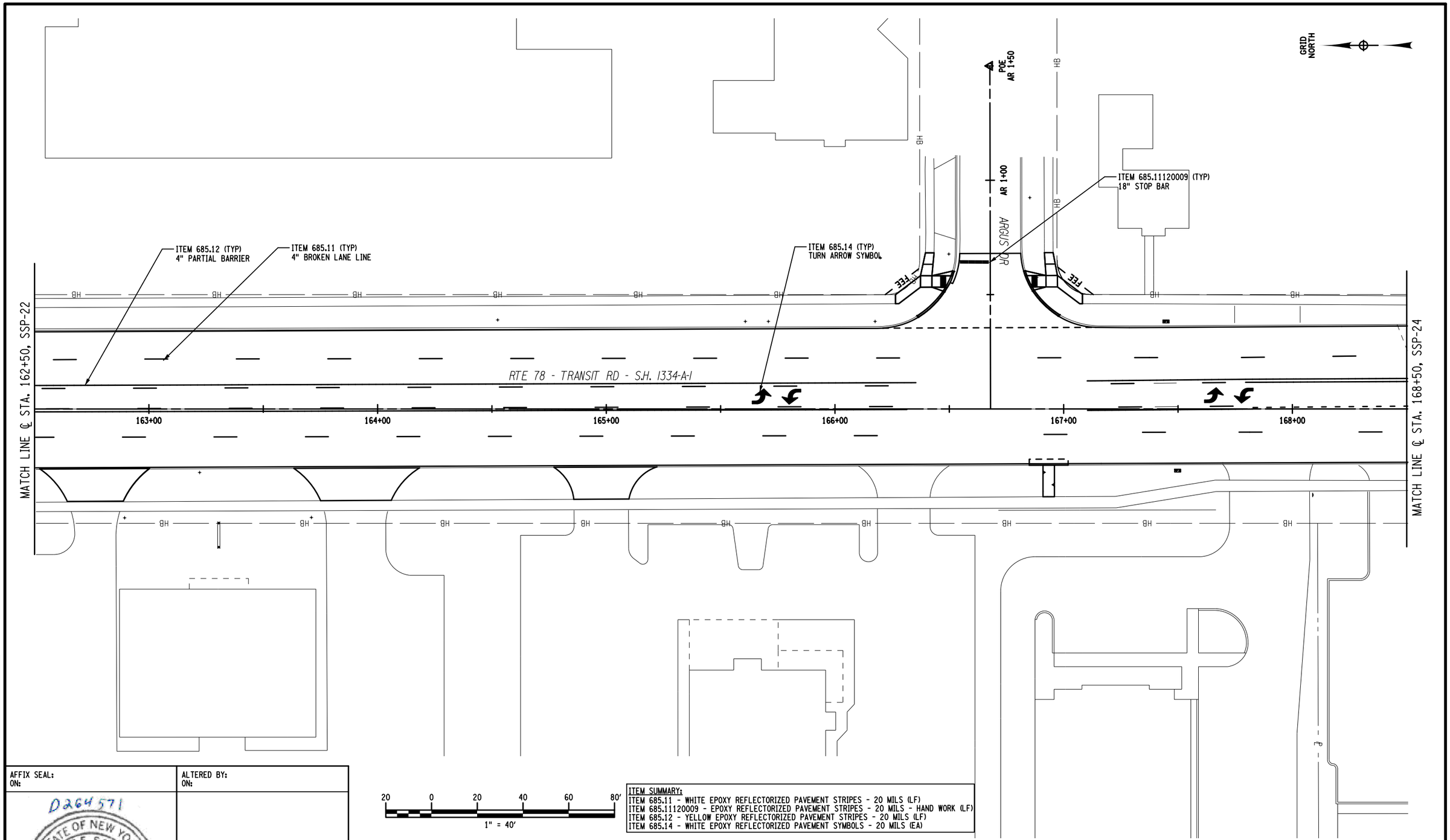

20 0 20 40 60 80′

1" = 40′

ITEM SUMMARY:
ITEM 685.11 - WHITE EPOXY REFLECTORIZED PAVEMENT STRIPES - 20 MILS (LF)
ITEM 685.11120009 - EPOXY REFLECTORIZED PAVEMENT STRIPES - 20 MILS - HAND WORK (LF)
ITEM 685.12 - YELLOW EPOXY REFLECTORIZED PAVEMENT STRIPES - 20 MILS (LF)
ITEM 685.14 - WHITE EPOXY REFLECTORIZED PAVEMENT SYMBOLS - 20 MILS (EA)

AFFIX SEAL:
ON:

D264571

STATE OF NEW YORK
ROBERT F. SCHALLER
NO. 082465
LICENSED PROFESSIONAL ENGINEER

ALTERED BY:
ON:

AS-BUILT REVISIONS
DESCRIPTION OF ALTERATIONS:

NY 78, TRANSIT ROAD, S.H. 1334A-1
FRENCH ROAD TO WEHRLE DRIVE
TOWNS OF CHEEKTOWAGA & LANCASTER
VILLAGE OF DEPEW
COUNTY: ERIE REGION: 05

PIN 5813.61
NY 78
UTILITY QUALITY LEVEL D

BRIDGES

CULVERTS

ALL DIMENSIONS IN ft UNLESS OTHERWISE NOTED

SIGN & STRIPING PLAN 23
STA. 162+50 TO STA. 168+50

CONTRACT NUMBER
D264571

DRAWING NO. STP-23
SHEET NO. 271

IT IS A VIOLATION OF LAW FOR ANY PERSON, UNLESS THEY ARE ACTING UNDER THE DIRECTION OF A LICENSED PROFESSIONAL ENGINEER, ARCHITECT, LANDSCAPE ARCHITECT, OR LAND SURVEYOR, TO ALTER AN ITEM IN ANY WAY. IF AN ITEM BEARING THE STAMP OF A LICENSED PROFESSIONAL IS ALTERED, THE ALTERING ENGINEER, ARCHITECT, LANDSCAPE ARCHITECT, OR LAND SURVEYOR SHALL STAMP THE DOCUMENT AND INCLUDE THE NOTATION "ALTERED BY" FOLLOWED BY THEIR SIGNATURE, THE DATE OF SUCH ALTERATION, AND A SPECIFIC DESCRIPTION OF THE ALTERATION.

NEW YORK STATE OF OPPORTUNITY. Department of Transportation

DESIGN SUPERVISOR S. S. VAIDYA JOB MANAGER R. F. SCHALLER DESIGN C. L. CRITES CHECK R. F. SCHALLER DRAFTING C. L. CRITES CHECK R. F. SCHALLER PROJECT MANAGER S. S. VAIDYA

FILE NAME = 581361_CPH_HWY_STP-23.dgn
DATE/TIME = 22-JUN-2021 12:46
USER = cortes

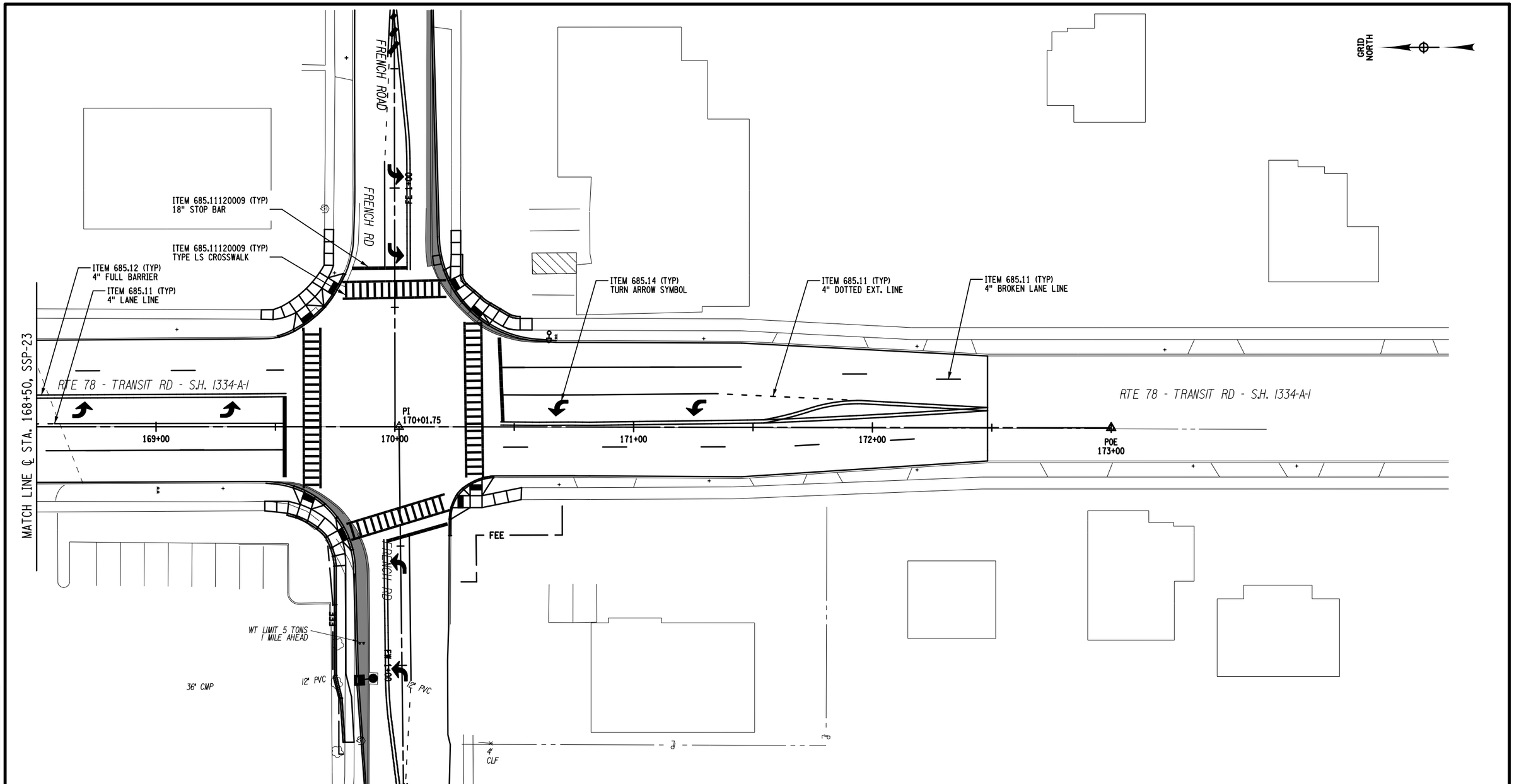

20 0 20 40 60 80'

1" = 40'

ITEM SUMMARY:
ITEM 685.11 - WHITE EPOXY REFLECTORIZED PAVEMENT STRIPES - 20 MILS (LF)
ITEM 685.11120009 - EPOXY REFLECTORIZED PAVEMENT STRIPES - 20 MILS - HAND WORK (LF)
ITEM 685.12 - YELLOW EPOXY REFLECTORIZED PAVEMENT STRIPES - 20 MILS (LF)
ITEM 685.14 - WHITE EPOXY REFLECTORIZED PAVEMENT SYMBOLS - 20 MILS (EA)

AFFIX SEAL:
ON:

D264571

STATE OF NEW YORK
ROBERT F. SCHALLER
LICENSED PROFESSIONAL ENGINEER
NO. 082465

ALTERED BY:
ON:

AS-BUILT REVISIONS
DESCRIPTION OF ALTERATIONS:

NY 78, TRANSIT ROAD, S.H. 1334A-1
FRENCH ROAD TO WEHRLE DRIVE
TOWNS OF CHEEKTOWAGA & LANCASTER
VILLAGE OF DEPEW
COUNTY: ERIE REGION: 05

PIN 5813.61
NY 78
UTILITY QUALITY LEVEL D

BRIDGES

CULVERTS

ALL DIMENSIONS IN ft UNLESS OTHERWISE NOTED

SIGN & STRIPING PLAN 24
STA. 168+50 TO STA. 174+50

CONTRACT NUMBER
D264571

DRAWING NO. STP-24
SHEET NO. 272

IT IS A VIOLATION OF LAW FOR ANY PERSON, UNLESS THEY ARE ACTING UNDER THE DIRECTION OF A LICENSED PROFESSIONAL ENGINEER, ARCHITECT, LANDSCAPE ARCHITECT, OR LAND SURVEYOR, TO ALTER AN ITEM IN ANY WAY. IF AN ITEM BEARING THE STAMP OF A LICENSED PROFESSIONAL IS ALTERED, THE ALTERING ENGINEER, ARCHITECT, LANDSCAPE ARCHITECT, OR LAND SURVEYOR SHALL STAMP THE DOCUMENT AND INCLUDE THE NOTATION "ALTERED BY" FOLLOWED BY THEIR SIGNATURE, THE DATE OF SUCH ALTERATION, AND A SPECIFIC DESCRIPTION OF THE ALTERATION.

NEW YORK STATE OF OPPORTUNITY. Department of Transportation

DESIGN SUPERVISOR S. S. VAIDYA JOB MANAGER R. F. SCHALLER DESIGN C. L. CRITES CHECK R. F. SCHALLER DRAFTING C. L. CRITES CHECK R. F. SCHALLER PROJECT MANAGER S. S. VAIDYA

FILE NAME = 581361_CPH_HWY_STP-24.dgn
DATE/TIME = 22-JUN-2021 12:46
USER = crites

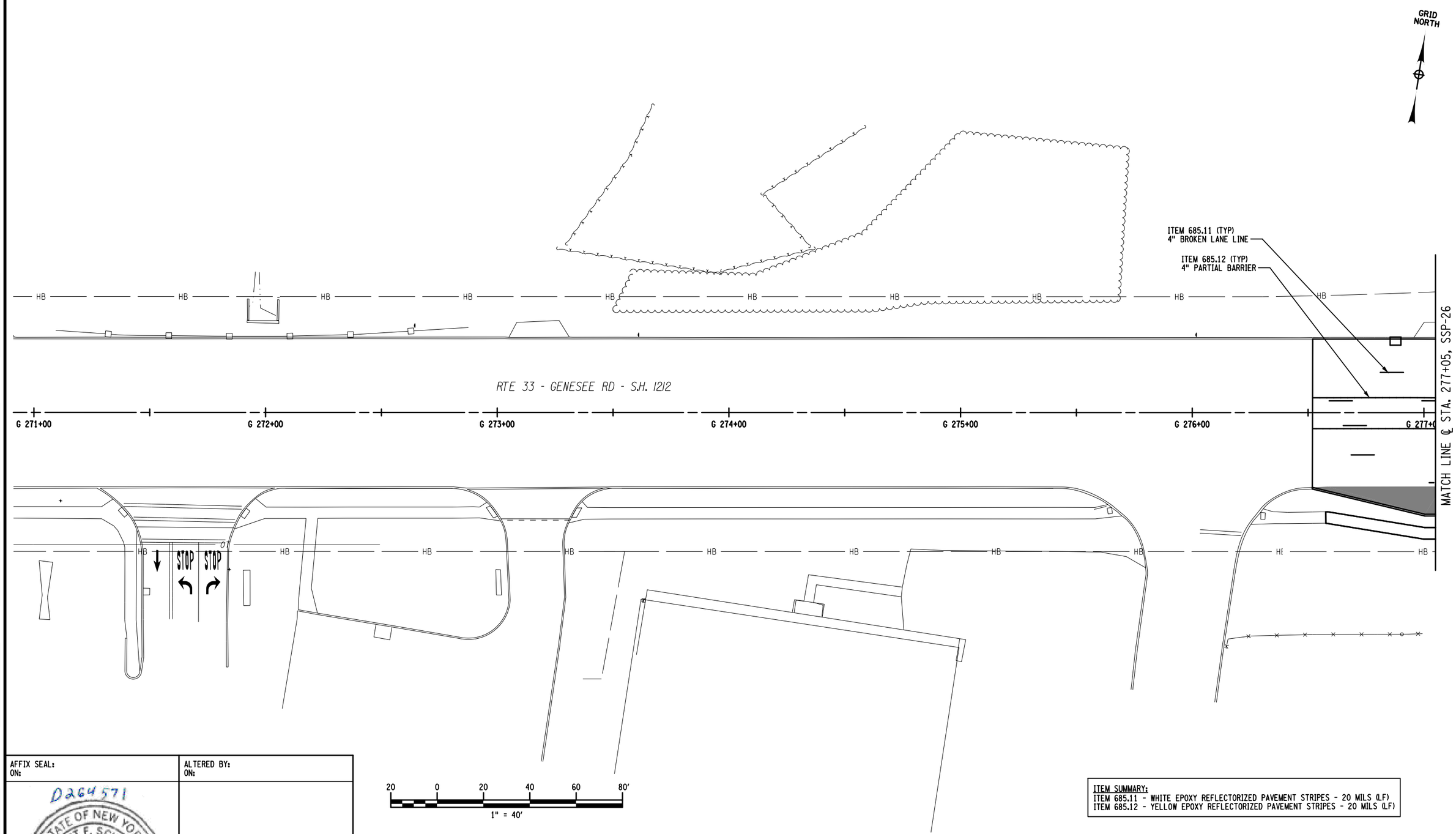

ITEM SUMMARY:
ITEM 685.11 - WHITE EPOXY REFLECTORIZED PAVEMENT STRIPES - 20 MILS (LF)
ITEM 685.12 - YELLOW EPOXY REFLECTORIZED PAVEMENT STRIPES - 20 MILS (LF)

AFFIX SEAL:
ON:

D264571
STATE OF NEW YORK
ROBERT F. SCHALLER
NO. 082465
LICENSED PROFESSIONAL ENGINEER

ALTERED BY:
ON:

AS-BUILT REVISIONS
DESCRIPTION OF ALTERATIONS:

NY 78, TRANSIT ROAD, S.H. 1334A-1
FRENCH ROAD TO WEHRLE DRIVE
TOWNS OF CHEEKTOWAGA & LANCASTER
VILLAGE OF DEPEW
COUNTY: ERIE REGION: 05

PIN 5813.61
NY 78
UTILITY QUALITY LEVEL D

BRIDGES

CULVERTS

ALL DIMENSIONS IN ft UNLESS OTHERWISE NOTED

SIGN & STRIPING PLAN 25
STA. G 270+91 TO G 277+05

CONTRACT NUMBER
D264571

DRAWING NO. STP-25
SHEET NO. 273

IT IS A VIOLATION OF LAW FOR ANY PERSON, UNLESS THEY ARE ACTING UNDER THE DIRECTION OF A LICENSED PROFESSIONAL ENGINEER, ARCHITECT, LANDSCAPE ARCHITECT, OR LAND SURVEYOR, TO ALTER AN ITEM IN ANY WAY. IF AN ITEM BEARING THE STAMP OF A LICENSED PROFESSIONAL IS ALTERED, THE ALTERING ENGINEER, ARCHITECT, LANDSCAPE ARCHITECT, OR LAND SURVEYOR SHALL STAMP THE DOCUMENT AND INCLUDE THE NOTATION "ALTERED BY" FOLLOWED BY THEIR SIGNATURE, THE DATE OF SUCH ALTERATION, AND A SPECIFIC DESCRIPTION OF THE ALTERATION.

NEW YORK STATE OF OPPORTUNITY. Department of Transportation

PROJECT MANAGER S. S. VAIDYA
CHECK R. F. SCHALLER
DRAFTING C. L. CRITES
CHECK R. F. SCHALLER
DESIGN C. L. CRITES
JOB MANAGER R. F. SCHALLER
DESIGN SUPERVISOR S. S. VAIDYA

FILE NAME = 581361_CPH_HWY_STP-25.dgn
DATE/TIME = 22-JUN-2021 12:46
USER = crites

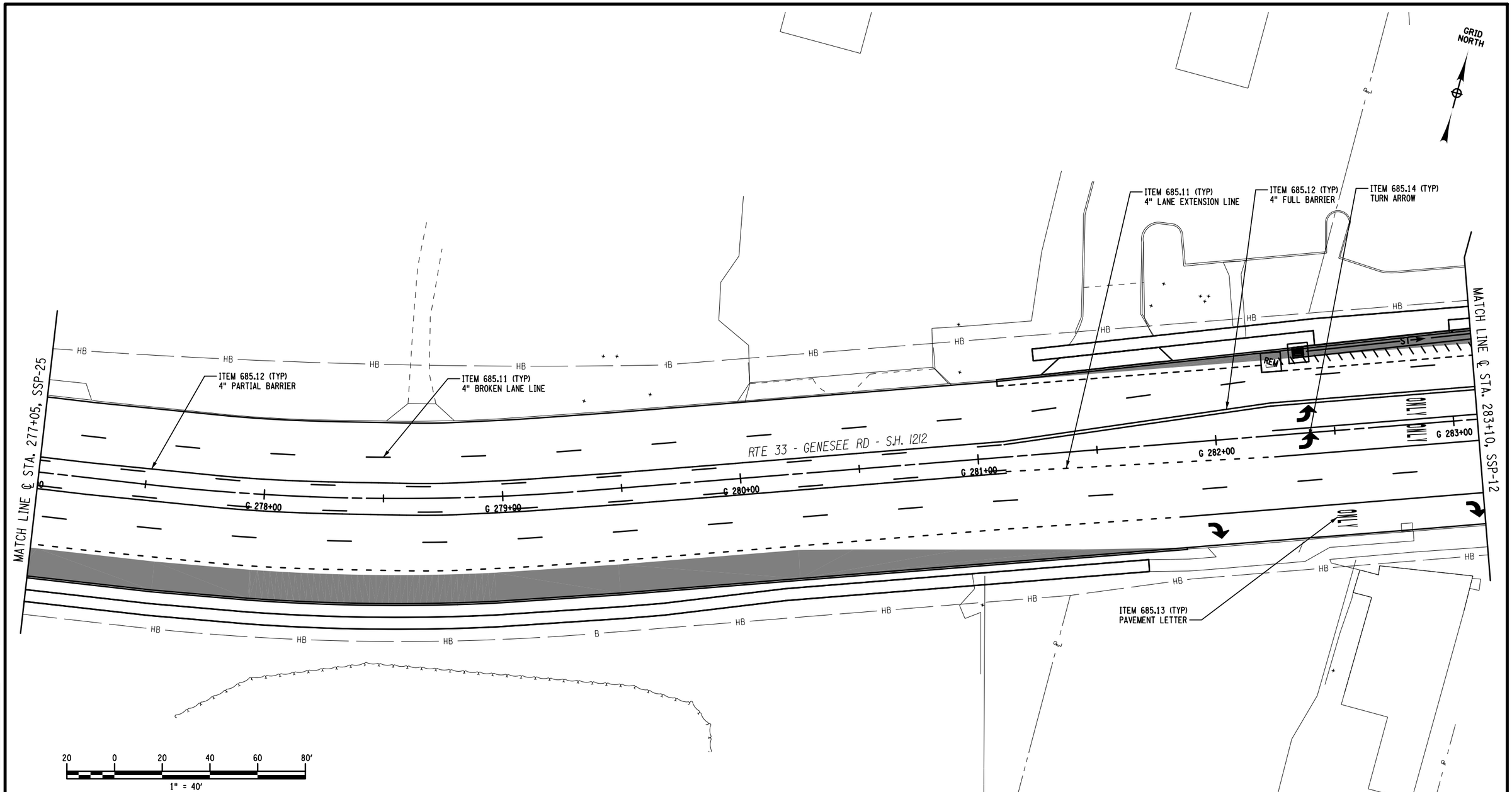

AFFIX SEAL: ON:	ALTERED BY: ON:
D264571 STATE OF NEW YORK ROBERT F. SCHALLER NO. 082465 LICENSED PROFESSIONAL ENGINEER	

ITEM SUMMARY:
ITEM 685.11 - WHITE EPOXY REFLECTORIZED PAVEMENT STRIPES - 20 MILS (LF)
ITEM 685.12 - YELLOW EPOXY REFLECTORIZED PAVEMENT STRIPES - 20 MILS (LF)
ITEM 685.13 - WHITE EPOXY REFLECTORIZED PAVEMENT LETTERS - 20 MILS (EA)
ITEM 685.14 - WHITE EPOXY REFLECTORIZED PAVEMENT SYMBOLS - 20 MILS (EA)

AS-BUILT REVISIONS DESCRIPTION OF ALTERATIONS:	NY 78, TRANSIT ROAD, S.H. 1334A-1	PIN 5813.61 NY 78 UTILITY QUALITY LEVEL D	BRIDGES	CULVERTS	ALL DIMENSIONS IN ft UNLESS OTHERWISE NOTED	CONTRACT NUMBER D264571
	FRENCH ROAD TO WEHRLE DRIVE				SIGN & STRIPING PLAN 26 STA. 277+.05 TO STA. 283+10	
	TOWNS OF CHEEKTOWAGA & LANCASTER					DRAWING NO. STP-26
	VILLAGE OF DEPEW					SHEET NO. 274
	COUNTY: ERIE REGION: 05					

IT IS A VIOLATION OF LAW FOR ANY PERSON, UNLESS THEY ARE ACTING UNDER THE DIRECTION OF A LICENSED PROFESSIONAL ENGINEER, ARCHITECT, LANDSCAPE ARCHITECT, OR LAND SURVEYOR, TO ALTER AN ITEM IN ANY WAY. IF AN ITEM BEARING THE STAMP OF A LICENSED PROFESSIONAL IS ALTERED, THE ALTERING ENGINEER, ARCHITECT, LANDSCAPE ARCHITECT, OR LAND SURVEYOR SHALL STAMP THE DOCUMENT AND INCLUDE THE NOTATION "ALTERED BY" FOLLOWED BY THEIR SIGNATURE, THE DATE OF SUCH ALTERATION, AND A SPECIFIC DESCRIPTION OF THE ALTERATION.

NEW YORK STATE OF OPPORTUNITY. Department of Transportation

DESIGN SUPERVISOR S. S. VAIDYA JOB MANAGER R. F. SCHALLER DESIGN C. L. CRITES CHECK R. F. SCHALLER DRAFTING C. L. CRITES CHECK R. F. SCHALLER PROJECT MANAGER S. S. VAIDYA

FILE NAME = 581361_CPH_HWY_STP-26.dgn
DATE/TIME = 22-JUN-2021 12:46
USER = ccrites

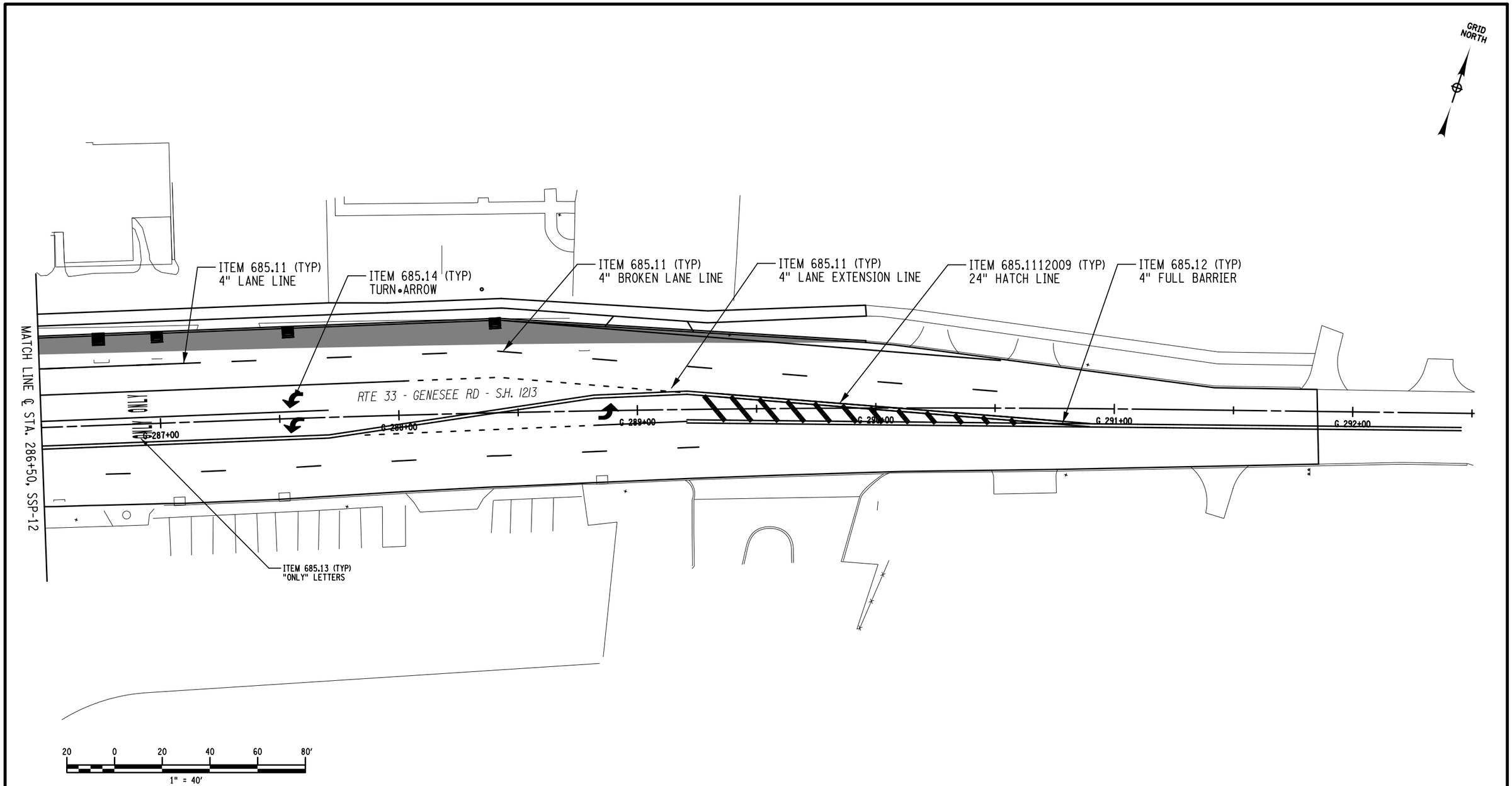

AFFIX SEAL:
ON:

ALTERED BY:
ON:

D264571

STATE OF NEW YORK
ROBERT F. SCHALLER
NO. 082465
LICENSED PROFESSIONAL ENGINEER

ITEM SUMMARY:
ITEM 685.11 - WHITE EPOXY REFLECTORIZED PAVEMENT STRIPES - 20 MILS (LF)
ITEM 685.11120009 - EPOXY REFLECTORIZED PAVEMENT STRIPES - 20 MILS - HAND WORK (LF)
ITEM 685.12 - YELLOW EPOXY REFLECTORIZED PAVEMENT STRIPES - 20 MILS (LF)
ITEM 685.13 - WHITE EPOXY REFLECTORIZED PAVEMENT STRIPES - 20 MILS (EA)
ITEM 685.14 - WHITE EPOXY REFLECTORIZED PAVEMENT SYMBOLS - 20 MILS (EA)

AS-BUILT REVISIONS
DESCRIPTION OF ALTERATIONS:

NY 78, TRANSIT ROAD, S.H. 1334A-1
FRENCH ROAD TO WEHRLE DRIVE
TOWNS OF CHEEKTOWAGA & LANCASTER
VILLAGE OF DEPEW
COUNTY: ERIE REGION: 05

PIN 5813.61
NY 78
UTILITY QUALITY LEVEL D

BRIDGES

CULVERTS

ALL DIMENSIONS IN ft UNLESS OTHERWISE NOTED

SIGN & STRIPING PLAN 27
STA. 286+50 TO STA. 292+50

CONTRACT NUMBER
D264571

DRAWING NO. STP-27
SHEET NO. 275

IT IS A VIOLATION OF LAW FOR ANY PERSON, UNLESS THEY ARE ACTING UNDER THE DIRECTION OF A LICENSED PROFESSIONAL ENGINEER, ARCHITECT, LANDSCAPE ARCHITECT, OR LAND SURVEYOR, TO ALTER AN ITEM IN ANY WAY. IF AN ITEM BEARING THE STAMP OF A LICENSED PROFESSIONAL IS ALTERED, THE ALTERING ENGINEER, ARCHITECT, LANDSCAPE ARCHITECT, OR LAND SURVEYOR SHALL STAMP THE DOCUMENT AND INCLUDE THE NOTATION "ALTERED BY" FOLLOWED BY THEIR SIGNATURE, THE DATE OF SUCH ALTERATION, AND A SPECIFIC DESCRIPTION OF THE ALTERATION.

NEW YORK STATE OF OPPORTUNITY. Department of Transportation

PROJECT MANAGER S. S. VAIDYA
CHECK R. F. SCHALLER
DRAFTING C. L. CRITES
CHECK R. F. SCHALLER
DESIGN C. L. CRITES
JOB MANAGER R. F. SCHALLER
DESIGN SUPERVISOR S. S. VAIDYA

FILE NAME = 581361_CPH_HWY_STP-27.dgn
DATE/TIME = 22-JUN-2021 12:46
USER = ccrites

UTILITY -WATER

ITEM 663.33

ADJUST EXISTING VALVE BOX ELEVATIONS
WORK TO BE DONE BY THE STATE'S CONTRACTOR

ERIE COUNTY WATER AUTHORITY

EXISTING LOCATION				CONFLICT RESOLUTION		NUMBER OF VALVES (EA.)	COMMENTS
DRAWING NUMBER	STATION	SIDE	OFFSET	CONFLICT IDENTIFIED	SUGGESTED WORK TO BE DONE		
TRANSIT ROAD							
UTL-12	101+29.27	RT	47.49	WATER VALVE IN EXCAVATION LIMITS	ADJUST ELEVATION	1	PROP. SWK WORK
UTL-13	108+08.06	LT	45.96	WATER VALVE IN EXCAVATION LIMITS	ADJUST ELEVATION	1	PROP. SWK WORK
UTL-17	127+08.50	RT	44.83	WATER VALVE IN EXCAVATION LIMITS	ADJUST ELEVATION	2	PROP. CURB RAMP WORK
UTL-17	127+96.96	RT	44.54	WATER VALVE IN EXCAVATION LIMITS	ADJUST ELEVATION	1	PROP. CURB RAMP WORK
UTL-17	129+67.73	RT	41.98	WATER VALVE IN EXCAVATION LIMITS	ADJUST ELEVATION	1	PROP. SWK WORK
UTL-17	130+12.51	LT	45.54	WATER VALVE IN EXCAVATION LIMITS	ADJUST ELEVATION	1	PROP. SWK WORK
UTL-17	130+58.75	RT	42.07	WATER VALVE IN EXCAVATION LIMITS	ADJUST ELEVATION	1	PROP. SWK WORK
UTL-18	132+60.38	LT	42.47	WATER VALVE IN EXCAVATION LIMITS	ADJUST ELEVATION	1	PROP. SWK WORK
UTL-18	135+71.23	RT	46.21	WATER VALVE IN EXCAVATION LIMITS	ADJUST ELEVATION	1	PROP. SWK WORK
UTL-18	136+72.58	RT	45.33	WATER VALVE IN EXCAVATION LIMITS	ADJUST ELEVATION	1	PROP. SWK WORK
UTL-19	142+40.15	RT	35.31	WATER VALVE IN EXCAVATION LIMITS	ADJUST ELEVATION	1	PROP. SWK WORK
UTL-19	144+04.50	RT	39.11	WATER VALVE IN EXCAVATION LIMITS	ADJUST ELEVATION	1	PROP. SWK WORK
UTL-20	145+83.53	RT	39.25	WATER VALVE IN EXCAVATION LIMITS	ADJUST ELEVATION	1	PROP. SWK WORK
UTL-20	148+80.89	RT	36.27	WATER VALVE IN EXCAVATION LIMITS	ADJUST ELEVATION	1	PROP. SWK WORK
UTL-20	149+01.25	LT	47.01	WATER VALVE IN EXCAVATION LIMITS	ADJUST ELEVATION	1	PROP. SWK WORK
UTL-20	150+04.28	RT	38.19	WATER VALVE IN EXCAVATION LIMITS	ADJUST ELEVATION	1	PROP. SWK WORK
UTL-21	155+37.11	RT	40.58	WATER VALVE IN EXCAVATION LIMITS	ADJUST ELEVATION	1	PROP. SWK WORK
GENESEE STREET							
UTL-26	G 279+01.06	RT	35.98	WATER VALVE IN EXCAVATION LIMITS	ADJUST ELEVATION	1	IN PROP. RDWY
UTL-26	G 280+55.18	RT	50.98	WATER VALVE IN EXCAVATION LIMITS	ADJUST ELEVATION	1	PROP. SWK WORK
WITHIN MILL & PAVE LIMITS							
VARIOUS LOCATIONS (REFER TO UTL-1 THRU UTL-27) A.D.B.E.						10	IN PROP. RDWY
					TOTAL	30	

ERIE COUNTY WATER AUTHORITY

EXISTING LOCATION				CONFLICT RESOLUTION		COMMENTS
DRAWING NUMBER	STATION	SIDE	OFFSET	CONFLICT IDENTIFIED	SUGGESTED WORK TO BE DONE	
TRANSIT ROAD						
UTL-12	100+38.27	RT	55.37'	24"/30" WL SERVICE LINE CONFLICT	RELOCATE / SEE WLP-1	DEPTH OF COVER
UTL-12	101+29.58	RT	40.39	24"/30" WL SERVICE LINE CONFLICT	RELOCATE / SEE WLP-1	PROP. DS WORK
UTL-12	102+18.13	RT	35.49	8" WL SERVICE LINE CONFLICT	RELOCATE / SEE WLP-2	PROP. DS WORK
UTL-13	102+68.64	RT	36.04	8" WL SERVICE LINE CONFLICT	RELOCATE / SEE WLP-2	PROP. DS WORK
UTL-13	104+19.15	RT	36.85	8" WL SERVICE LINE CONFLICT	RELOCATE / SEE WLP-2	PROP. DS WORK

UTILITY -WATER (CONT.)

ITEM 663.31

RELOCATE EXISTING FIRE HYDRANTS - WORK TO BE DONE BY THE STATE'S CONTRACTOR

ERIE COUNTY WATER AUTHORITY

EXISTING LOCATION				CONFLICT RESOLUTION		NUMBER OF VALVES (EA.)	COMMENTS
DRAWING NUMBER	STATION	SIDE	OFFSET	CONFLICT IDENTIFIED	SUGGESTED WORK TO BE DONE		
TRANSIT ROAD							
UTL-19	142+40.95	RT	39.0'	HYDRANT IN EXCAVATION LIMITS	RELOCATE	1	PROP. SWK WORK
UTL-21	150+78.58	RT	44.3'	HYDRANT IN EXCAVATION LIMITS	RELOCATE	1	PROP. SWK WORK
GENESEE STREET							
UTL-26	G 279+01.06	RT	37.9'	HYDRANT IN EXCAVATION LIMITS	RELOCATE	1	IN PROP. RDWY
					TOTAL	3	

ALTERING DRAINAGE STRUCTURES, LEACHING BASINS AND MANHOLES

ERIE COUNTY WATER AUTHORITY

EXISTING LOCATION				CONFLICT RESOLUTION		NUMBER OF MANHOLES (EA.)	COMMENTS
DRAWING NUMBER	STATION	SIDE	OFFSET	CONFLICT IDENTIFIED	SUGGESTED WORK TO BE DONE		
TRANSIT ROAD							
UTL-17	128+77.09	RT	39.43	MH IN EXCAVATION LIMITS	ADJUST ELEVATION	1	PROP. SWK WORK
					TOTAL	1	

UTILITY - SANITARY

ALTERING DRAINAGE STRUCTURES, LEACHING BASINS AND MANHOLES

ERIE COUNTY SEWER

EXISTING LOCATION				CONFLICT RESOLUTION		NUMBER OF MANHOLES (EA.)	COMMENTS
DRAWING NUMBER	STATION	SIDE	OFFSET	CONFLICT IDENTIFIED	SUGGESTED WORK TO BE DONE		
TRANSIT ROAD							
UTL-7	67+61.05	LT	59.91	MH IN EXCAVATION LIMITS	ADJUST ELEVATION	1	MATCH PROP. SWK
UTL-8	75+68.49	LT	52.49	MH IN EXCAVATION LIMITS	ADJUST ELEVATION	1	MATCH PROP. SWK
UTL-20	145+24.05	LT	49.32	MH IN EXCAVATION LIMITS	ADJUST ELEVATION	1	MATCH PROP. SWK
UTL-23	166+95.66	LT	50.31	MH IN EXCAVATION LIMITS	ADJUST ELEVATION	1	IN EX SWK
GENESEE STREET							
UTL-26	G 278+31.02	RT	38.88	MH IN EXCAVATION LIMITS	ADJUST ELEVATION	1	IN PROP. RDWY
UTL-26	G 281+16.84	RT	51.33	MH IN EXCAVATION LIMITS	ADJUST ELEVATION	1	MATCH PROP. SWK
					TOTAL	6	

UTILITY - CHARTER

CHARTER

WORK ORDER NUMBER: X

EXISTING LOCATION				CONFLICT RESOLUTION		COMMENTS
DRAWING NUMBER	STATION	SIDE	OFFSET	CONFLICT IDENTIFIED	SUGGESTED WORK TO BE DONE	
TRANSIT ROAD						
UTL-14	112+53.74	RT	38.49	PULLBOX IN EXCAVATION LIMITS	ADJUST ELEVATION	PROP. SWK WORK

AFFIX SEAL:
ON:

D264571
STATE OF NEW YORK
ROBERT F. SCHALLER
NO. 082465
LICENSED PROFESSIONAL ENGINEER

ALTERED BY:
ON:

AS-BUILT REVISIONS
DESCRIPTION OF ALTERATIONS:

NY 78, TRANSIT ROAD, S.H. 1334A-1
FRENCH ROAD TO WEHRLE DRIVE
TOWNS OF CHEEKTOWAGA & LANCASTER
VILLAGE OF DEPEW
COUNTY: ERIE REGION: 05

PIN 5813.61
NY 78

BRIDGES

CULVERTS

ALL DIMENSIONS IN ft UNLESS OTHERWISE NOTED

UTILITY TABLE 1

CONTRACT NUMBER
D264571

DRAWING NO. UTT-1
SHEET NO. 276

IT IS A VIOLATION OF LAW FOR ANY PERSON, UNLESS THEY ARE ACTING UNDER THE DIRECTION OF A LICENSED PROFESSIONAL ENGINEER, ARCHITECT, LANDSCAPE ARCHITECT, OR LAND SURVEYOR, TO ALTER AN ITEM IN ANY WAY. IF AN ITEM BEARING THE STAMP OF A LICENSED PROFESSIONAL IS ALTERED, THE ALTERING ENGINEER, ARCHITECT, LANDSCAPE ARCHITECT, OR LAND SURVEYOR SHALL STAMP THE DOCUMENT AND INCLUDE THE NOTATION "ALTERED BY" FOLLOWED BY THEIR SIGNATURE, THE DATE OF SUCH ALTERATION, AND A SPECIFIC DESCRIPTION OF THE ALTERATION.

NEW YORK STATE OF OPPORTUNITY. Department of Transportation

DESIGN SUPERVISOR S. S. VAIDYA
JOB MANAGER R. F. SCHALLER
DESIGN C. L. CRITES
CHECK R. F. SCHALLER
DRAFTING C. L. CRITES
CHECK V. M. DINATALE
PROJECT MANAGER S. S. VAIDYA

FILE NAME = 581361_CPH_HWY_UTT-1_.dgn
DATE/TIME = 22-JUN-2021 12:47
USER = cprites

UTILITY - VERIZON

VERIZON

WORK ORDER NUMBER: X

EXISTING LOCATION				CONFLICT RESOLUTION		COMMENTS
DRAWING NUMBER	STATION	SIDE	OFFSET	CONFLICT IDENTIFIED	SUGGESTED WORK TO BE DONE	
TRANSIT ROAD						
UTL-7	67+60.01	LT	51.34	FIBER OPTIC MH IN EXCAVATION LIMITS	ADJUST ELEVATION	MATCH FILL
UTL-7	67+70.03	RT	62.19	TELEPHONE MH IN EXCAVATION LIMITS	ADJUST ELEVATION	MATCH PROP. SWK
UTL-12	101+85.72	RT	44.67	TELEPHONE MH IN EXCAVATION LIMITS	ADJUST ELEVATION	MATCH PROP. SWK
UTL-13	105+00.05	RT	49.14	TELEPHONE RISER IN EXCAVATION LIMITS	RELOCATE	PROP. SWK WORK
UTL-14	113+53.81	LT	90.34	TELEPHONE RISER IN EXCAVATION LIMITS	RELOCATE	PROP. SWK WORK
UTL-24	170+27.66	LT	73.02	MH IN EXCAVATION LIMITS	ADJUST ELEVATION	PROP. SWK WORK

UTILITY - STORM

ALTERING DRAINAGE STRUCTURES, LEACHING BASINS AND MANHOLES

EXISTING LOCATION				CONFLICT RESOLUTION		NUMBER OF MANHOLES (EA.)	COMMENTS
DRAWING NUMBER	STATION	SIDE	OFFSET	CONFLICT IDENTIFIED	SUGGESTED WORK TO BE DONE		
TRANSIT ROAD							
UTL-7	67+54.62	RT	57.19	MH IN EXCAVATION LIMITS	ADJUST ELEVATION	1	MATCH PROP. SWK
UTL-7	68+91.44	RT	57.61	MH IN EXCAVATION LIMITS	ADJUST ELEVATION	1	MATCH PROP. SWK
UTL-8	78+32.22	RT	58.35	MH IN EXCAVATION LIMITS	ADJUST ELEVATION	1	MATCH PROP. SWK
UTL-9	80+25.11	RT	58.57	MH IN EXCAVATION LIMITS	ADJUST ELEVATION	1	MATCH PROP. SWK
					TOTAL	4	

UTILITY - UNKNOWN

UNKNOWN OWNERS

WORK ORDER NUMBER: X

EXISTING LOCATION				CONFLICT RESOLUTION		COMMENTS
DRAWING NUMBER	STATION	SIDE	OFFSET	CONFLICT IDENTIFIED	SUGGESTED WORK TO BE DONE	
TRANSIT ROAD						
UTL-12	100+67.87	RT	51.29	UNK. LINE IN EXCAVATION LIMITS	RELOCATE	PLEASE IDENTIFY IF OWNED
UTL-12	G 284+49.30	LT	46.26	UNK. LINE IN EXCAVATION LIMITS	RELOCATE	PLEASE IDENTIFY IF OWNED

UTILITY - NATIONAL FUEL

NATIONAL FUEL

WORK ORDER NUMBER: X

EXISTING LOCATION				CONFLICT RESOLUTION		COMMENTS
DRAWING NUMBER	STATION	SIDE	OFFSET	CONFLICT IDENTIFIED	SUGGESTED WORK TO BE DONE	
TRANSIT ROAD						
UTL-12	G 284+15.45	LT	45.52	GAS LINE IN EXCAVATION LIMITS	RELOCATE GAS LINE	PROP. DS WORK
UTL-12	G 284+47.99	LT	47.61	GAS LINE IN EXCAVATION LIMITS	RELOCATE GAS LINE	PROP. DS WORK
UTL-12	102+26.42	RT	48.07	GAS LINE MARKER IN EXCAVATION LIMITS	RELOCATE GAS LINE MARKER	PROP. SWK WORK
UTL-18	132+76.24	LT	42.06	GAS LINE MARKER IN EXCAVATION LIMITS	RELOCATE GAS LINE MARKER	PROP. SWK WORK
UTL-21	150+76.12	RT	47.72	GAS LINE MARKER IN EXCAVATION LIMITS	RELOCATE GAS LINE MARKER	PROP. SWK WORK
FRENCH ROAD						
UTL-24	FW 1+05.98	RT	21.93	GAS LINE IN EXCAVATION LIMITS	RELOCATE GAS LINE IF NEEDED	PROP. DS WORK
GENESEE ROAD						
UTL-27	G 287+89.85	LT	36.67	GAS LINE IN EXCAVATION LIMITS	RELOCATE GAS LINE IF NEEDED	PROP. DS WORK

ADJUST EXISTING VALVE BOX ELEVATIONS
WORK TO BE DONE BY

NATIONAL FUEL

EXISTING LOCATION				CONFLICT RESOLUTION		NUMBER OF VALVES (EA.)	COMMENTS
DRAWING NUMBER	STATION	SIDE	OFFSET	CONFLICT IDENTIFIED	SUGGESTED WORK TO BE DONE		
TRANSIT ROAD							
UTL-13	105+73.84	47.43	LT	GAS VALVE IN EXCAVATION LIMITS	ADJUST ELEVATION	1	PROP. SWK WORK
UTL-13	108+08.25	47.26	LT	GAS VALVE IN EXCAVATION LIMITS	ADJUST ELEVATION	1	PROP. SWK WORK
UTL-14	112+71.91	47.61	LT	GAS VALVE IN EXCAVATION LIMITS	ADJUST ELEVATION	1	PROP. SWK WORK
UTL-19	144+11.94	54.47	LT	GAS VALVE IN EXCAVATION LIMITS	ADJUST ELEVATION	1	PROP. CURB RAMP WORK
UTL-20	147+87.18	44.31	LT	GAS VALVE IN EXCAVATION LIMITS	ADJUST ELEVATION	1	PROP. SWK WORK
UTL-21	151+24.63	55.51	RT	GAS VALVE IN EXCAVATION LIMITS	ADJUST ELEVATION	1	PROP. CURB RAMP WORK
UTL-24	170+26.90	36.21	RT	GAS VALVE IN EXCAVATION LIMITS	ADJUST ELEVATION	1	PROP. CURB RAMP WORK
GENESEE STREET							
UTL-26	G 281+56	45.36	LT	GAS VALVE IN EXCAVATION LIMITS	ADJUST ELEVATION	1	PROP. SWK WORK
					TOTAL	8	

AFFIX SEAL:
ON:

D264571
STATE OF NEW YORK
ROBERT F. SCHALLER
NO. 082465
LICENSED PROFESSIONAL ENGINEER

ALTERED BY:
ON:

AS-BUILT REVISIONS
DESCRIPTION OF ALTERATIONS:

NY 78, TRANSIT ROAD, S.H. 1334A-1
FRENCH ROAD TO WEHRLE DRIVE
TOWNS OF CHEEKTOWAGA & LANCASTER
VILLAGE OF DEPEW
COUNTY: ERIE REGION: 05

PIN 5813.61
NY 78

BRIDGES

CULVERTS

ALL DIMENSIONS IN ft UNLESS OTHERWISE NOTED

UTILITY TABLE 2

CONTRACT NUMBER
D264571

DRAWING NO. UTT-2
SHEET NO. 277

IT IS A VIOLATION OF LAW FOR ANY PERSON, UNLESS THEY ARE ACTING UNDER THE DIRECTION OF A LICENSED PROFESSIONAL ENGINEER, ARCHITECT, LANDSCAPE ARCHITECT, OR LAND SURVEYOR, TO ALTER AN ITEM IN ANY WAY. IF AN ITEM BEARING THE STAMP OF A LICENSED PROFESSIONAL IS ALTERED, THE ALTERING ENGINEER, ARCHITECT, LANDSCAPE ARCHITECT, OR LAND SURVEYOR SHALL STAMP THE DOCUMENT AND INCLUDE THE NOTATION "ALTERED BY" FOLLOWED BY THEIR SIGNATURE, THE DATE OF SUCH ALTERATION, AND A SPECIFIC DESCRIPTION OF THE ALTERATION.

NEW YORK STATE OF OPPORTUNITY. Department of Transportation

DESIGN SUPERVISOR S. S. VAIDYA JOB MANAGER R. F. SCHALLER DESIGN C. L. CRITES CHECK R. F. SCHALLER DRAFTING C. L. CRITES CHECK V. M. DINATALE PROJECT MANAGER S. S. VAIDYA
FILE NAME = 581361_CPH_HWY_UTT-2_.dgn
DATE/TIME = 22-JUN-2021 12:47
USER = corites

UTILITY - ELECTRIC

UTILITY POLE AND OVERHEAD LINE ADJUSTMENTS BY POLE OWNER(S) AND OVERHEAD LINE OWNER(S)

EXISTING LOCATION				CONFLICT RESOLUTION		UTILITY POLE NUMBER(S)	POLE OWNER(S)	GUY WIRE OWNER(S)	IS THERE A LUMINAIRE ATTACHED?[1]	OVERHEAD LINE OWNERS FROM THE TOP OF POLE DOWN (LISTED LEFT TO RIGHT)[2]		COMMENTS
DRAWING NUMBER	STATION	SIDE	OFFSET	CONFLICT IDENTIFIED	SUGGESTED WORK TO BE DONE					NYSEG	VERIZON	
TRANSIT ROAD												
UTL-7	68+91.38	LT	62.68'	POLE CLOSE TO EXCAVATION LIMITS	FILL AROUND POLE	NO #	NYSEG					ADDITIONAL 0.5' OF FILL
UTL-7	72+48.26	LT	61.92'	POLE CLOSE TO EXCAVATION LIMITS	FILL AROUND POLE	NO #	NYSEG					ADDITIONAL 2.75' OF FILL
UTL-7	73+41.91	LT	64.61'	POLE CLOSE TO EXCAVATION LIMITS	FILL AROUND POLE	NO #	NYSEG					ADDITIONAL 2.0' OF FILL
UTL-8	74+14.65	RT	47.31'	POLE IN THE PROP. RDWY	RELOCATE	NYSEG/239	NYSEG		1			
UTL-8	75+53.10	RT	46.63'	POLE IN THE PROP. RDWY	RELOCATE	NYSEG/217/238	NYSEG					
UTL-8	77+21.99	RT	56.94'	POLE CLOSE TO EXCAVATION LIMITS	FILL AROUND POLE	NYSEG/217/237	NYSEG	NYSEG				ADDITIONAL 0.75' OF FILL
UTL-9	83+32.69	RT	60.80'	POLE CLOSE TO EXCAVATION LIMITS	FILL AROUND POLE	NO #	NYSEG					ADDITIONAL 0.4' OF FILL
UTL-10	87+20.22	LT	60.11'	POLE IN VACINITY OF PROP. DITCH	FILL AROUND POLE	NO #	NYSEG					ELEV. -0.33'
UTL-11	90+98.06	RT	61.57'	POLE CLOSE TO EXCAVATION LIMITS	FILL AROUND POLE	NO #	NYSEG					ADDITIONAL 0.33' OF FILL
UTL-11	93+89.81	LT	51.28'	GUY WIRE CONFLICT	RELOCATE	NO #	NYSEG	NYSEG				
UTL-11	94+58.12	RT	57.80'	GUY WIRE CLEARANCE	RELOCATE	NYSEG 228 / NYT 631						
UTL-11	94+61.06	RT	55.42'	POLE CLOSE TO EXCAVATION LIMITS	FILL AROUND POLE	NYSEG 228 / NYT 631	NYSEG	NYSEG				ADDITIONAL 0.27' OF FILL
UTL-11	94+62.46	RT	59.21'	GUY WIRE CLEARANCE	RELOCATE	NYSEG 228 / NYT 631	NYSEG	NYSEG				
UTL-12	97+86.11	LT	47.79'	POLE NEAR PED. BRIDGE EXCAVATION LIMITS	STABILIZE	NYSEG/217/225/NYT/65	NYSEG					
UTL-12	99+30.57	RT	69.18'	POLE IN THE EXCAVATION LIMITS	RELOCATE	NYSEG/298	NYSEG		1			
UTL-12	101+10.63	RT	39.79'	POLE DOES NOT MEET OFFSET CLEARANCE MIN.	RELOCATE	NO #	NYSEG		1			
UTL-13	103+45.42	RT	44.06'	POLE IN THE EXCAVATION LIMITS	RELOCATE	X/NYSEG/220-6	NYSEG		1			
UTL-13	107+22.37	LT	41.89'	GUY WIRE CONFLICT	RELOCATE	NYSEG/217/NYT/BELL/ATL/73	NYSEG	NYSEG	1			
UTL-14	110+56.12	RT	51.77'	GUY WIRE CONFLICT	RELOCATE	NYSEG/3779/1/NYT/76-1	NYSEG	NYSEG				2 GUY WIRES
UTL-14	112+70.85	LT	43.02'	GUY WIRE CLEARANCE	RELOCATE	NYSEG/213	NYSEG	NYSEG	1			
UTL-14	114+16.52	LT	43.93'	GUY WIRE CONFLICT	RELOCATE	NO #	NYSEG	NYSEG				
UTL-15	117+16.68	LT	43.23'	GUY WIRE CONFLICT	RELOCATE	209/H/NYT/46	NYSEG	NYSEG				
UTL-16	121+74.21	LT	46.96	GUY WIRE CLEARANCE	RELOCATE	205/NYT/43	NYSEG	NYSEG				
UTL-16	123+20.32	RT	45.61	GUY WIRE CLEARANCE	RELOCATE	NO #	NYSEG	NYSEG				
UTL-17	126+92.92	RT	47.26	GUY WIRE CLEARANCE	RELOCATE	X/202-1	NYSEG	NYSEG				
UTL-17	128+27.85	LT	43.31	POLE DOES NOT MEET OFFSET CLEARANCE MIN.	RELOCATE	217/201	NYSEG	NYSEG				
UTL-17	130+05.31	LT	45.82	GUY WIRE CLEARANCE	RELOCATE	NYSEG/200/NYT/37	NYSEG	NYSEG				
UTL-18	136+61.69	LT	44.37	POLE DOES NOT MEET OFFSET CLEARANCE MIN.	RELOCATE	NYSEG/217/195/NYT/32	NYSEG	NYSEG				
UTL-20	146+72.67	LT	45.71	GUY WIRE CONFLICT	RELOCATE	V/NYSEG/217/182/ NYT 24 87	NYSEG	NYSEG				
UTL-20	148+21.23	LT	44.25	POLE IN THE EXCAVATION LIMITS	RELOCATE	V/NYSEG/186/NYT/23	NYSEG		1			
UTL-20	149+59.88	LT	47.25	GUY WIRE CONFLICT	RELOCATE	NYSEG/185/VZ/22	NYSEG	NYSEG	1			2 GUY WIRES
UTL-21	151+24.95	LT	42.98	POLE IN THE EXCAVATION LIMITS	RELOCATE	NYSEG/184/NYT/21	NYSEG		1			
UTL-21	151+94.53	LT	42.77	POLE IN THE EXCAVATION LIMITS	RELOCATE	NYSEG/183/VZ/20	NYSEG					
UTL-21	155+49.03	LT	42.86	POLE IN THE EXCAVATION LIMITS	RELOCATE	V/NYSEG/181	NYSEG	NYSEG	1			
UTL-24	170+64.64	LT	36.83	POLE DOES NOT MEET OFFSET CLEARANCE MIN.	RELOCATE	NYSEG/169A/NYT/7	NYSEG		1			
UTL-24	170+25.42	RT	47.24	POLE DOES NOT MEET OFFSET CLEARANCE MIN.	RELOCATE	NG 35	NYSEG		1			
UTL-24	170+23.05	LT	70.25	POLE DOES NOT MEET OFFSET CLEARANCE MIN.	RELOCATE	NG 2276-36	NYSEG		1			
FRENCH ROAD												
UTL-24	FE 1+62.36	RT	22.01	POLE DOES NOT MEET OFFSET CLEARANCE MIN.	RELOCATE	NYSEG 2226	NYSEG					
GENESEE STREET												
UTL-26	G 280+19.24	RT	52.85	GUY WIRE CONFLICT	RELOCATE	NYSEG 294 NYT 102	NYSEG	NYSEG				
									13			

AFFIX SEAL:
ON:

D264571
STATE OF NEW YORK
ROBERT F. SCHALLER
NO. 082465
LICENSED PROFESSIONAL ENGINEER

ALTERED BY:
ON:

AS-BUILT REVISIONS
DESCRIPTION OF ALTERATIONS:

NY 78, TRANSIT ROAD, S.H. 1334A-1
FRENCH ROAD TO WEHRLE DRIVE
TOWNS OF CHEEKTOWAGA & LANCASTER
VILLAGE OF DEPEW
COUNTY: ERIE REGION: 05

PIN 5813.61
NY 78

BRIDGES

CULVERTS

ALL DIMENSIONS IN ft UNLESS OTHERWISE NOTED

UTILITY TABLE 3

CONTRACT NUMBER
D264571

DRAWING NO. UTT-3
SHEET NO. 278

IT IS A VIOLATION OF LAW FOR ANY PERSON, UNLESS THEY ARE ACTING UNDER THE DIRECTION OF A LICENSED PROFESSIONAL ENGINEER, ARCHITECT, LANDSCAPE ARCHITECT, OR LAND SURVEYOR, TO ALTER AN ITEM IN ANY WAY. IF AN ITEM BEARING THE STAMP OF A LICENSED PROFESSIONAL IS ALTERED, THE ALTERING ENGINEER, ARCHITECT, LANDSCAPE ARCHITECT, OR LAND SURVEYOR SHALL STAMP THE DOCUMENT AND INCLUDE THE NOTATION "ALTERED BY" FOLLOWED BY THEIR SIGNATURE, THE DATE OF SUCH ALTERATION, AND A SPECIFIC DESCRIPTION OF THE ALTERATION.

NEW YORK STATE OF OPPORTUNITY. Department of Transportation

DESIGN SUPERVISOR S. S. VAIDYA JOB MANAGER R. F. SCHALLER DESIGN C. L. CRITES CHECK R. F. SCHALLER DRAFTING C. L. CRITES CHECK V. M. DINATALE PROJECT MANAGER S. S. VAIDYA

FILE NAME = 581361_CPH_HWY_UTT-3_.dgn
DATE/TIME = 22-JUN-2021 12:47
USER = corites

PROJECT MANAGER S. S. VAIDYA
CHECK R. F. SCHALLER
DRAFTING C. L. CRITES
CHECK R. F. SCHALLER
DESIGN C. L. CRITES
JOB MANAGER R. F. SCHALLER
DESIGN SUPERVISOR S. S. VAIDYA

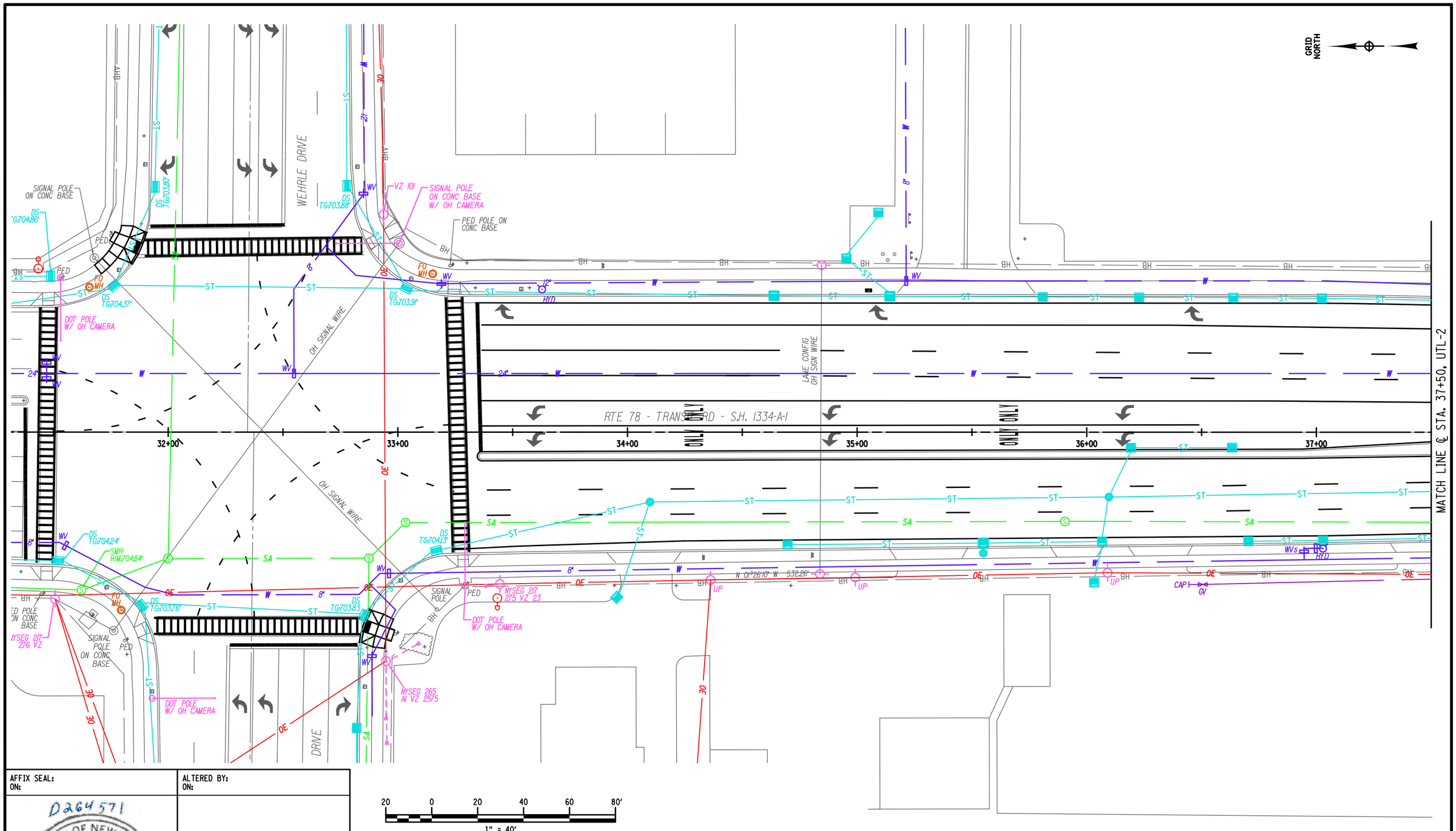

AFFIX SEAL:
ON:

ALTERED BY:
ON:

D264571

STATE OF NEW YORK
ROBERT F. SCHALLER
NO. 082465
LICENSED PROFESSIONAL ENGINEER

AS-BUILT REVISIONS
DESCRIPTION OF ALTERATIONS:

NY 78, TRANSIT ROAD, S.H. 1334A-1
FRENCH ROAD TO WEHRLE DRIVE
TOWNS OF CHEEKTOWAGA & LANCASTER
VILLAGE OF DEPEW
COUNTY: ERIE REGION: 05

PIN 5813.61
NY 78
UTILITY QUALITY LEVEL D

BRIDGES

CULVERTS

ALL DIMENSIONS IN ft UNLESS OTHERWISE NOTED

UTILITY PLANS
STA. 32+31.85 TO STA. 37+50

CONTRACT NUMBER
D264571

DRAWING NO. UTL-1
SHEET NO. 279

IT IS A VIOLATION OF LAW FOR ANY PERSON, UNLESS THEY ARE ACTING UNDER THE DIRECTION OF A LICENSED PROFESSIONAL ENGINEER, ARCHITECT, LANDSCAPE ARCHITECT, OR LAND SURVEYOR, TO ALTER AN ITEM IN ANY WAY. IF AN ITEM BEARING THE STAMP OF A LICENSED PROFESSIONAL IS ALTERED, THE ALTERING ENGINEER, ARCHITECT, LANDSCAPE ARCHITECT, OR LAND SURVEYOR SHALL STAMP THE DOCUMENT AND INCLUDE THE NOTATION "ALTERED BY" FOLLOWED BY THEIR SIGNATURE, THE DATE OF SUCH ALTERATION, AND A SPECIFIC DESCRIPTION OF THE ALTERATION.

NEW YORK STATE OF OPPORTUNITY. Department of Transportation

FILE NAME = 581361_CPH_HWY_UTL-1.dgn
DATE/TIME = 22-JUN-2021 12:47
USER = ccrites

PROJECT MANAGER S. S. VAIDYA
CHECK R. F. SCHALLER
DRAFTING C. L. CRITES
CHECK R. F. SCHALLER
DESIGN C. L. CRITES
JOB MANAGER R. F. SCHALLER
DESIGN SUPERVISOR S. S. VAIDYA

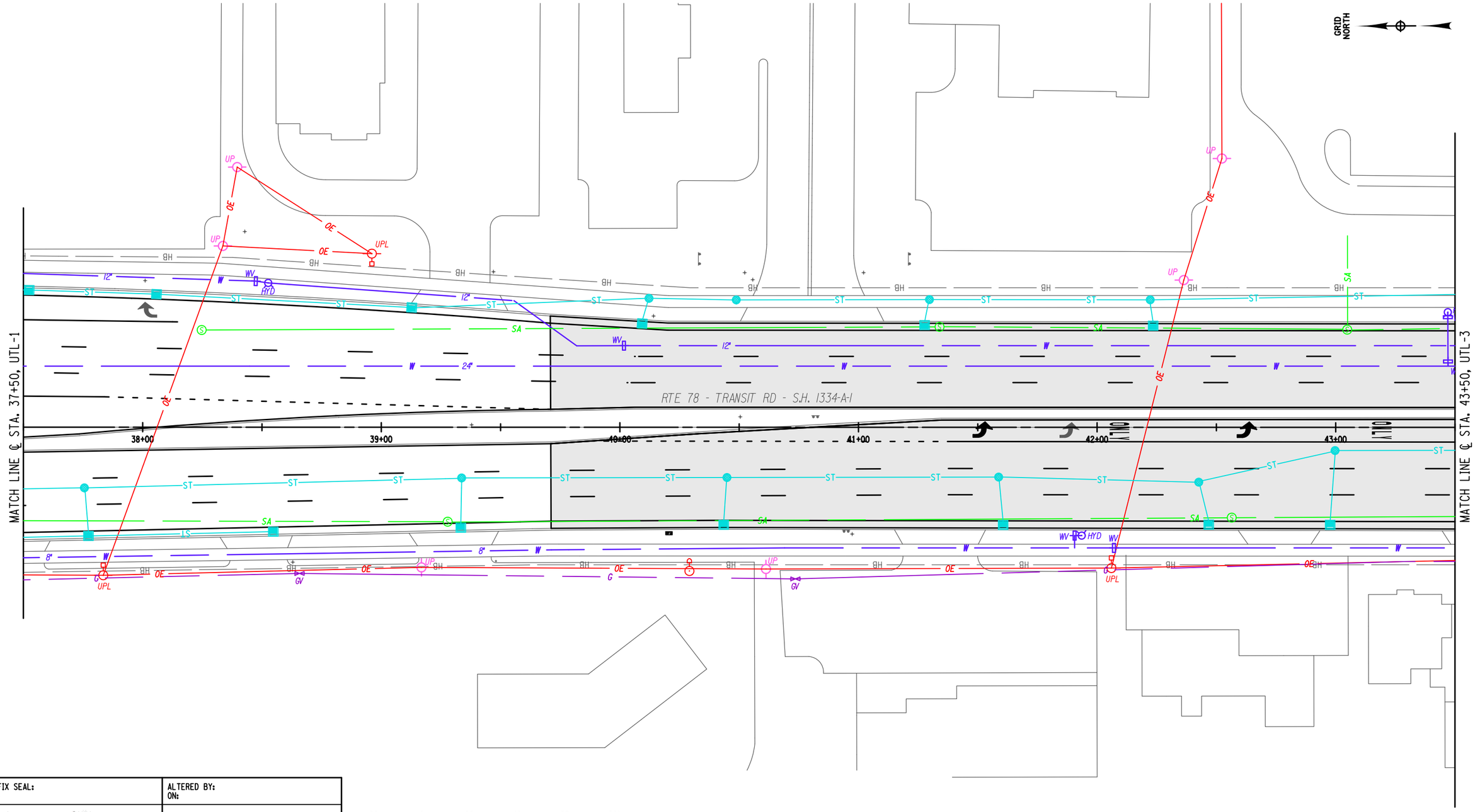

20 0 20 40 60 80'
1" = 40'

AFFIX SEAL:
ON:

ALTERED BY:
ON:

D264571

STATE OF NEW YORK
ROBERT F. SCHALLER
NO. 082465
LICENSED PROFESSIONAL ENGINEER

AS-BUILT REVISIONS
DESCRIPTION OF ALTERATIONS:

NY 78, TRANSIT ROAD, S.H. 1334A-1
FRENCH ROAD TO WEHRLE DRIVE
TOWNS OF CHEEKTOWAGA & LANCASTER
VILLAGE OF DEPEW
COUNTY: ERIE REGION: 05

PIN 5813.61
NY 78
UTILITY QUALITY LEVEL D

BRIDGES

CULVERTS

ALL DIMENSIONS IN ft UNLESS OTHERWISE NOTED

UTILITY PLANS
STA. 37+50 TO STA. 43+50

CONTRACT NUMBER
D264571

DRAWING NO. UTL-2
SHEET NO. 280

IT IS A VIOLATION OF LAW FOR ANY PERSON, UNLESS THEY ARE ACTING UNDER THE DIRECTION OF A LICENSED PROFESSIONAL ENGINEER, ARCHITECT, LANDSCAPE ARCHITECT, OR LAND SURVEYOR, TO ALTER AN ITEM IN ANY WAY. IF AN ITEM BEARING THE STAMP OF A LICENSED PROFESSIONAL IS ALTERED, THE ALTERING ENGINEER, ARCHITECT, LANDSCAPE ARCHITECT, OR LAND SURVEYOR SHALL STAMP THE DOCUMENT AND INCLUDE THE NOTATION "ALTERED BY" FOLLOWED BY THEIR SIGNATURE, THE DATE OF SUCH ALTERATION, AND A SPECIFIC DESCRIPTION OF THE ALTERATION.

NEW YORK STATE OF OPPORTUNITY. Department of Transportation

FILE NAME = 581361_CPH_HWY_UTL-2.dgn
DATE/TIME = 22-JUN-2021 12:47
USER = cartes

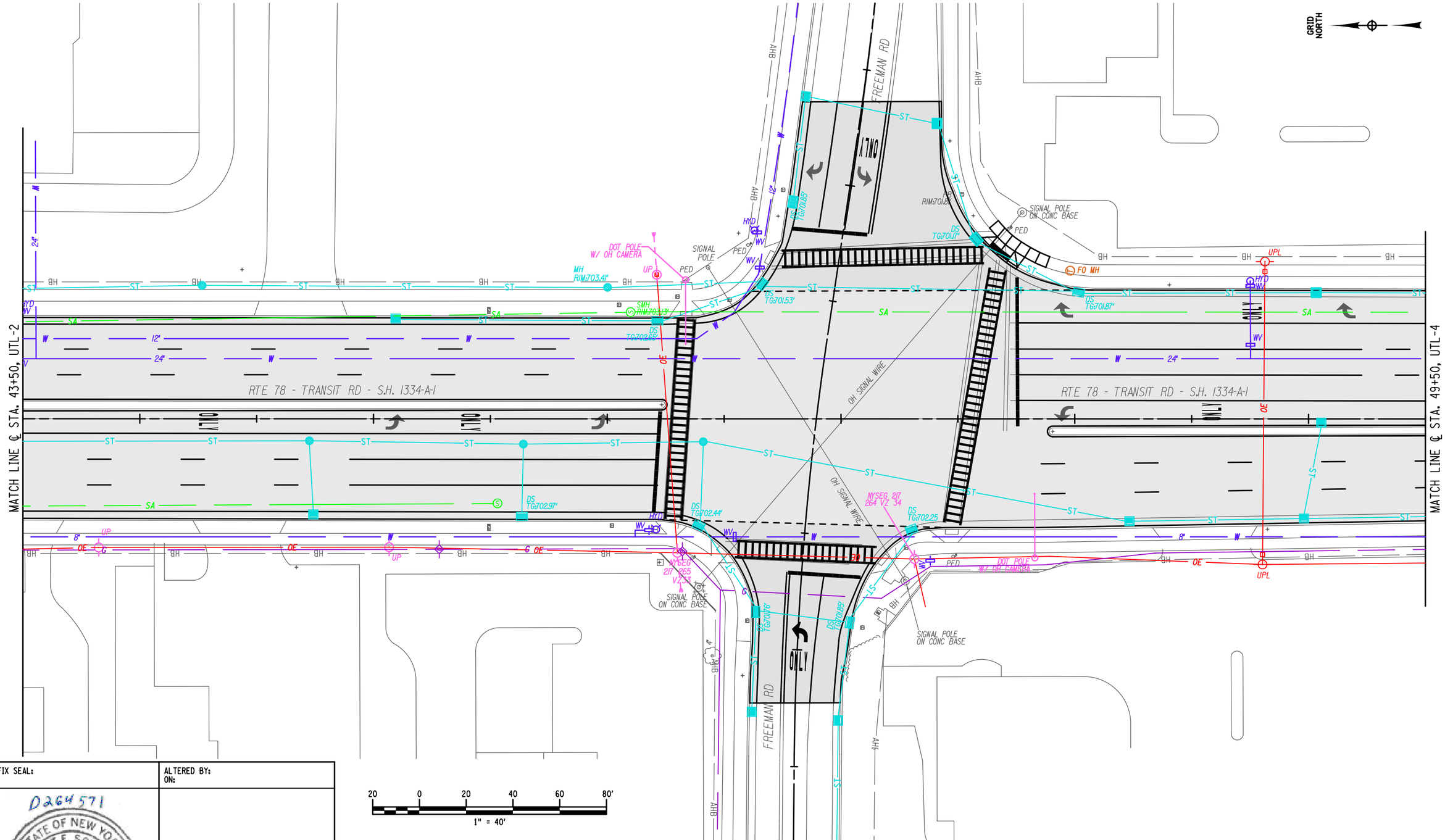

AFFIX SEAL:
ON:

ALTERED BY:
ON:

D264571

STATE OF NEW YORK
ROBERT F. SCHALLER
NO. 082465
LICENSED PROFESSIONAL ENGINEER

AS-BUILT REVISIONS
DESCRIPTION OF ALTERATIONS:

NY 78, TRANSIT ROAD, S.H. 1334A-1
FRENCH ROAD TO WEHRLE DRIVE
TOWNS OF CHEEKTOWAGA & LANCASTER
VILLAGE OF DEPEW
COUNTY: ERIE REGION: 05

PIN 5813.61
NY 78
UTILITY QUALITY LEVEL D

BRIDGES

CULVERTS

ALL DIMENSIONS IN ft UNLESS OTHERWISE NOTED

UTILITY PLANS
STA. 43+50 TO STA. 49+50

CONTRACT NUMBER
D264571

DRAWING NO. UTL-3
SHEET NO. 281

IT IS A VIOLATION OF LAW FOR ANY PERSON, UNLESS THEY ARE ACTING UNDER THE DIRECTION OF A LICENSED PROFESSIONAL ENGINEER, ARCHITECT, LANDSCAPE ARCHITECT, OR LAND SURVEYOR, TO ALTER AN ITEM IN ANY WAY. IF AN ITEM BEARING THE STAMP OF A LICENSED PROFESSIONAL IS ALTERED, THE ALTERING ENGINEER, ARCHITECT, LANDSCAPE ARCHITECT, OR LAND SURVEYOR SHALL STAMP THE DOCUMENT AND INCLUDE THE NOTATION "ALTERED BY" FOLLOWED BY THEIR SIGNATURE, THE DATE OF SUCH ALTERATION, AND A SPECIFIC DESCRIPTION OF THE ALTERATION.

NEW YORK STATE OF OPPORTUNITY. Department of Transportation

PROJECT MANAGER S. S. VAIDYA
CHECK R. F. SCHALLER
DRAFTING C. L. CRITES
CHECK R. F. SCHALLER
DESIGN C. L. CRITES
JOB MANAGER R. F. SCHALLER
DESIGN SUPERVISOR S. S. VAIDYA

FILE NAME = 581361_CPH_HWY_UTL-3.dgn
DATE/TIME = 22-JUN-2021 12:47
USER = cartes

PROJECT MANAGER S. S. VAIDYA
CHECK R. F. SCHALLER
DRAFTING C. L. CRITES
CHECK R. F. SCHALLER
DESIGN C. L. CRITES
JOB MANAGER R. F. SCHALLER
DESIGN SUPERVISOR S. S. VAIDYA

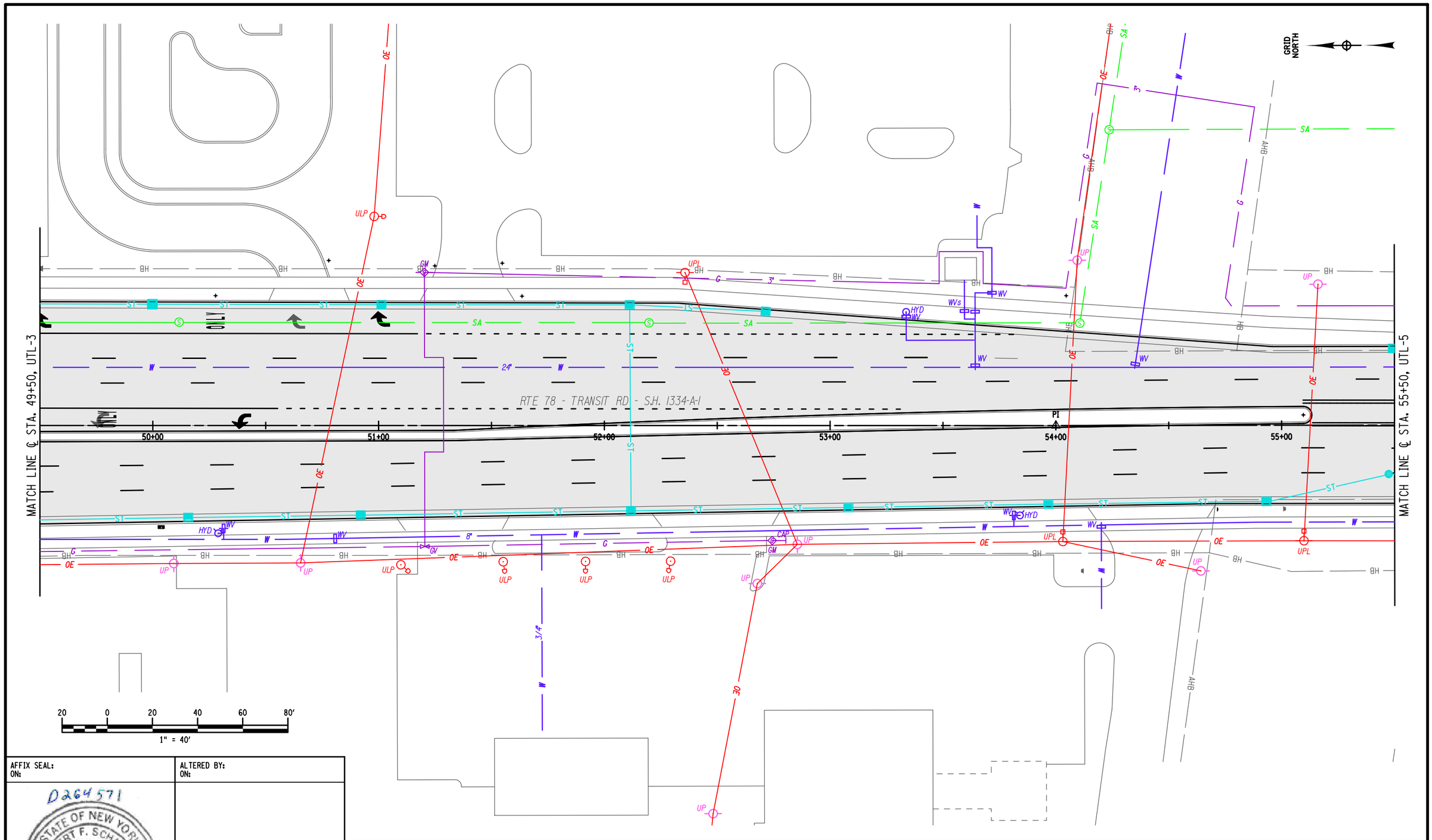

AFFIX SEAL:
ON:

ALTERED BY:
ON:

D264571
STATE OF NEW YORK
ROBERT F. SCHALLER
NO. 082465
LICENSED PROFESSIONAL ENGINEER

AS-BUILT REVISIONS
DESCRIPTION OF ALTERATIONS:

NY 78, TRANSIT ROAD, S.H. 1334A-1
FRENCH ROAD TO WEHRLE DRIVE
TOWNS OF CHEEKTOWAGA & LANCASTER
VILLAGE OF DEPEW
COUNTY: ERIE REGION: 05

PIN 5813.61
NY 78
UTILITY QUALITY LEVEL D

BRIDGES

CULVERTS

ALL DIMENSIONS IN ft UNLESS OTHERWISE NOTED

UTILITY PLANS
STA. 49+50 TO STA. 55+50

CONTRACT NUMBER
D264571

DRAWING NO. UTL-4
SHEET NO. 282

IT IS A VIOLATION OF LAW FOR ANY PERSON, UNLESS THEY ARE ACTING UNDER THE DIRECTION OF A LICENSED PROFESSIONAL ENGINEER, ARCHITECT, LANDSCAPE ARCHITECT, OR LAND SURVEYOR, TO ALTER AN ITEM IN ANY WAY. IF AN ITEM BEARING THE STAMP OF A LICENSED PROFESSIONAL IS ALTERED, THE ALTERING ENGINEER, ARCHITECT, LANDSCAPE ARCHITECT, OR LAND SURVEYOR SHALL STAMP THE DOCUMENT AND INCLUDE THE NOTATION "ALTERED BY" FOLLOWED BY THEIR SIGNATURE, THE DATE OF SUCH ALTERATION, AND A SPECIFIC DESCRIPTION OF THE ALTERATION.

NEW YORK STATE OF OPPORTUNITY. Department of Transportation

FILE NAME = 581361_CPH_HWY_UTL-4.dgn
DATE/TIME = 22-JUN-2021 12:47
USER = cortes

PROJECT MANAGER S. S. VAIDYA
CHECK R. F. SCHALLER
DRAFTING C. L. CRITES
CHECK R. F. SCHALLER
DESIGN C. L. CRITES
JOB MANAGER R. F. SCHALLER
DESIGN SUPERVISOR S. S. VAIDYA

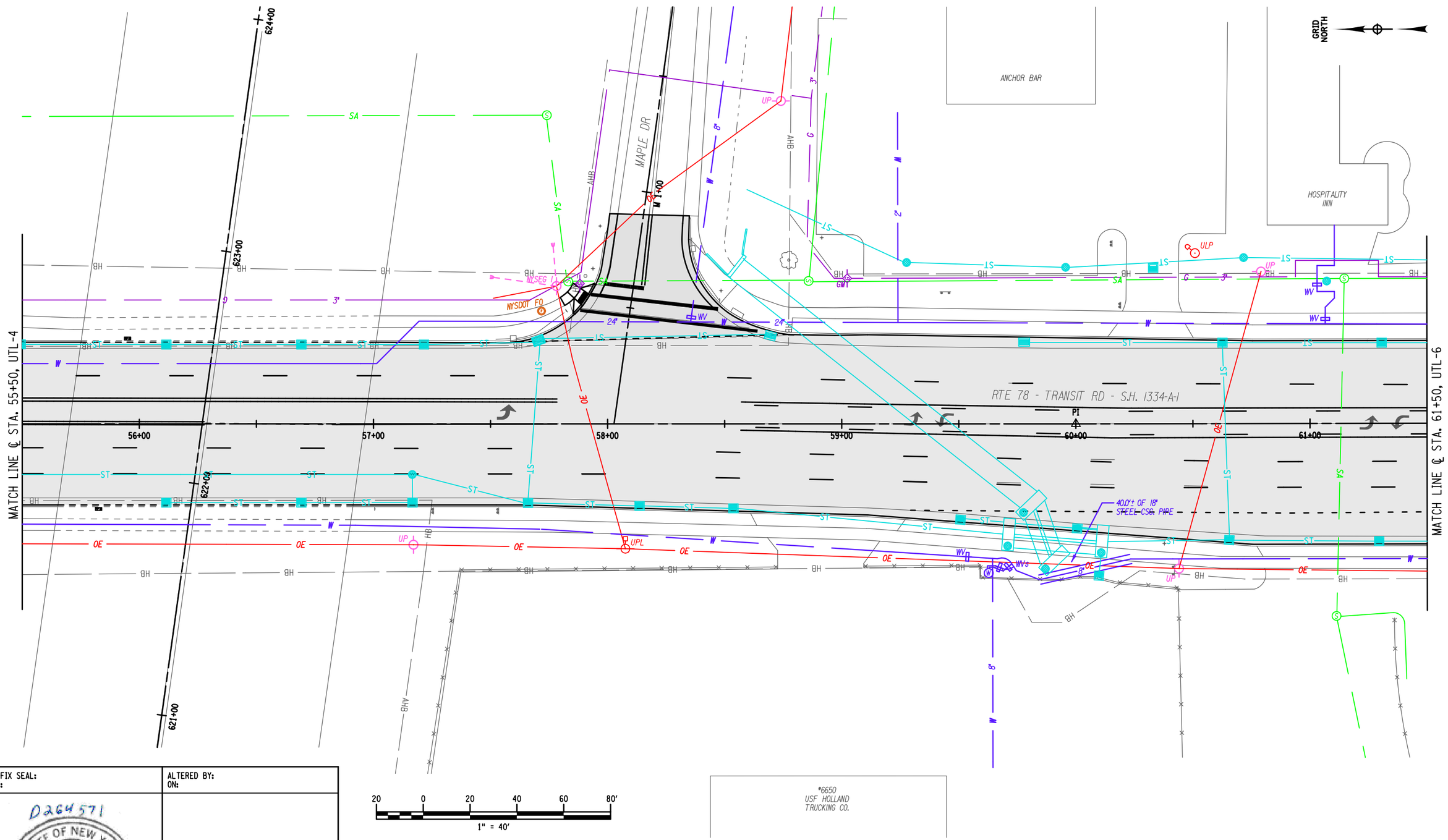

AFFIX SEAL:
ON:

ALTERED BY:
ON:

D264571
STATE OF NEW YORK
ROBERT F. SCHALLER
NO. 082465
LICENSED PROFESSIONAL ENGINEER

AS-BUILT REVISIONS
DESCRIPTION OF ALTERATIONS:

NY 78, TRANSIT ROAD, S.H. 1334A-1
FRENCH ROAD TO WEHRLE DRIVE
TOWNS OF CHEEKTOWAGA & LANCASTER
VILLAGE OF DEPEW
COUNTY: ERIE REGION: 05

PIN 5813.61
NY 78
UTILITY QUALITY LEVEL D

BRIDGES

CULVERTS

ALL DIMENSIONS IN ft UNLESS OTHERWISE NOTED

UTILITY PLANS
STA. 55+50 TO STA. 61+50

CONTRACT NUMBER
D264571

DRAWING NO. UTL-5
SHEET NO. 283

IT IS A VIOLATION OF LAW FOR ANY PERSON, UNLESS THEY ARE ACTING UNDER THE DIRECTION OF A LICENSED PROFESSIONAL ENGINEER, ARCHITECT, LANDSCAPE ARCHITECT, OR LAND SURVEYOR, TO ALTER AN ITEM IN ANY WAY. IF AN ITEM BEARING THE STAMP OF A LICENSED PROFESSIONAL IS ALTERED, THE ALTERING ENGINEER, ARCHITECT, LANDSCAPE ARCHITECT, OR LAND SURVEYOR SHALL STAMP THE DOCUMENT AND INCLUDE THE NOTATION "ALTERED BY" FOLLOWED BY THEIR SIGNATURE, THE DATE OF SUCH ALTERATION, AND A SPECIFIC DESCRIPTION OF THE ALTERATION.

NEW YORK STATE OF OPPORTUNITY. Department of Transportation

FILE NAME = 581361_CPH_HWY_UTL-5.dgn
DATE/TIME = 22-JUN-2021 12:47
USER = cartes

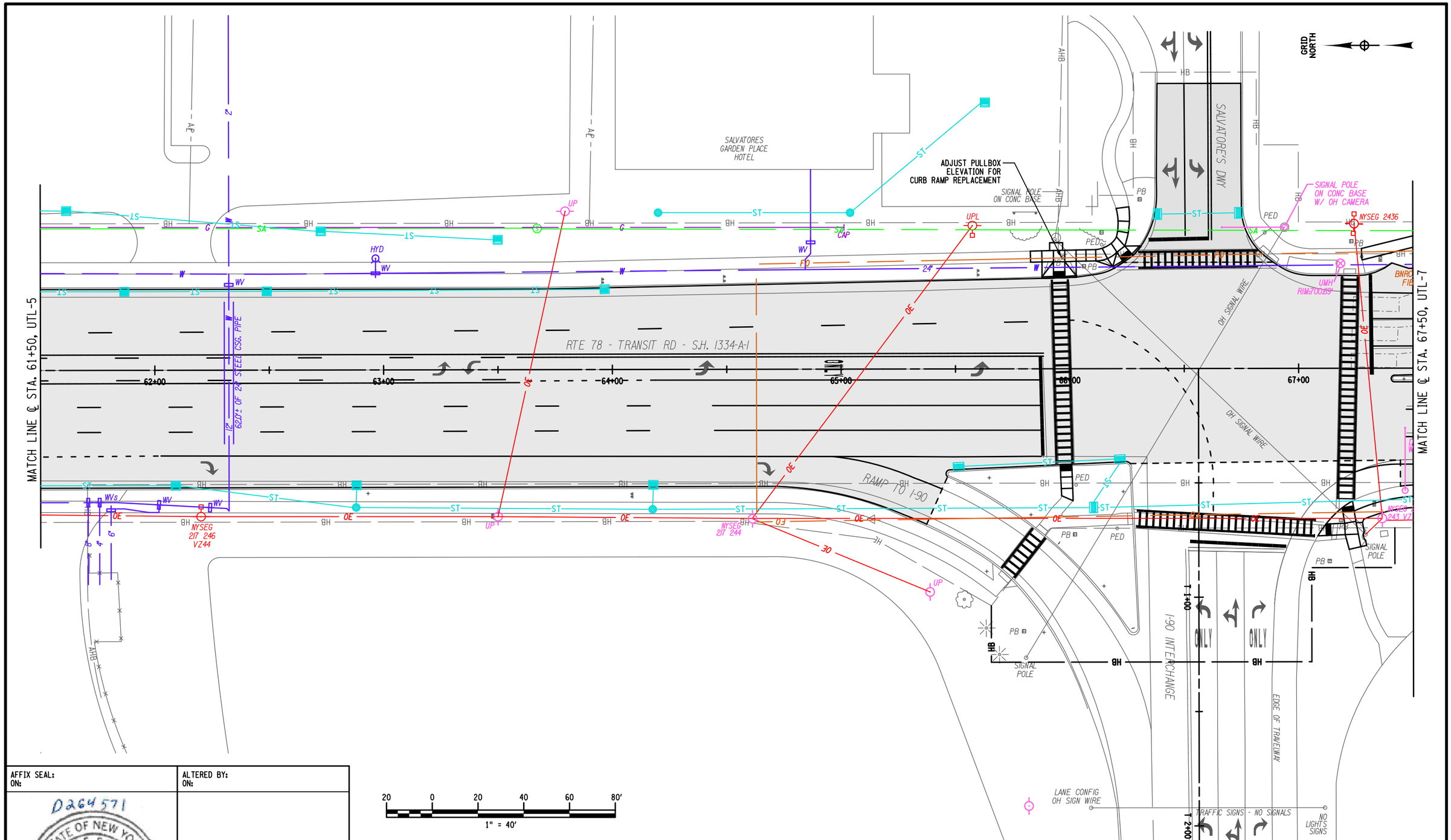

AFFIX SEAL: ON:	ALTERED BY: ON:
D264571 STATE OF NEW YORK ROBERT F. SCHALLER LICENSED PROFESSIONAL ENGINEER NO. 082465	

AS-BUILT REVISIONS
DESCRIPTION OF ALTERATIONS:

NY 78, TRANSIT ROAD, S.H. 1334A-1
FRENCH ROAD TO WEHRLE DRIVE
TOWNS OF CHEEKTOWAGA & LANCASTER
VILLAGE OF DEPEW
COUNTY: ERIE REGION: 05

PIN 5813.61
NY 78
UTILITY QUALITY LEVEL D

BRIDGES

CULVERTS

ALL DIMENSIONS IN ft UNLESS OTHERWISE NOTED

UTILITY PLANS
STA. 61+50 TO 67+50

CONTRACT NUMBER
D264571

DRAWING NO. UTL-6
SHEET NO. 284

IT IS A VIOLATION OF LAW FOR ANY PERSON, UNLESS THEY ARE ACTING UNDER THE DIRECTION OF A LICENSED PROFESSIONAL ENGINEER, ARCHITECT, LANDSCAPE ARCHITECT, OR LAND SURVEYOR, TO ALTER AN ITEM IN ANY WAY. IF AN ITEM BEARING THE STAMP OF A LICENSED PROFESSIONAL IS ALTERED, THE ALTERING ENGINEER, ARCHITECT, LANDSCAPE ARCHITECT, OR LAND SURVEYOR SHALL STAMP THE DOCUMENT AND INCLUDE THE NOTATION "ALTERED BY" FOLLOWED BY THEIR SIGNATURE, THE DATE OF SUCH ALTERATION, AND A SPECIFIC DESCRIPTION OF THE ALTERATION.

NEW YORK STATE OF OPPORTUNITY. Department of Transportation

PROJECT MANAGER S. S. VAIDYA
CHECK R. F. SCHALLER
DRAFTING C. L. CRITES
CHECK R. F. SCHALLER
DESIGN C. L. CRITES
JOB MANAGER R. F. SCHALLER
DESIGN SUPERVISOR S. S. VAIDYA

FILE NAME = 581361_CPH_HWY_UTL-6.dgn
DATE/TIME = 22-JUN-2021 12:47
USER = cortes

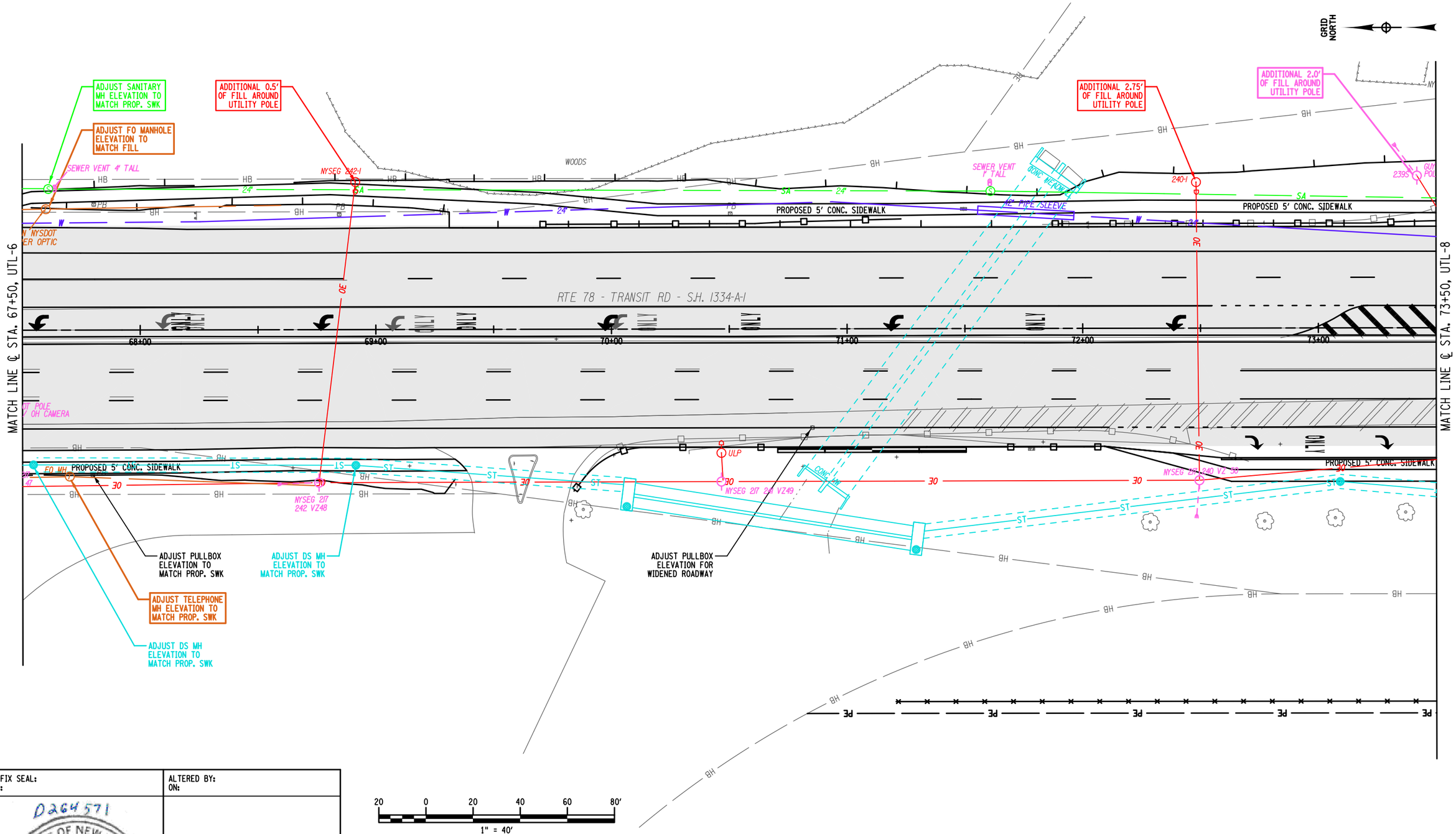

AFFIX SEAL:
ON:

ALTERED BY:
ON:

D264571
STATE OF NEW YORK
ROBERT F. SCHALLER
NO. 082465
LICENSED PROFESSIONAL ENGINEER

AS-BUILT REVISIONS
DESCRIPTION OF ALTERATIONS:

NY 78, TRANSIT ROAD, S.H. 1334A-1
FRENCH ROAD TO WEHRLE DRIVE
TOWNS OF CHEEKTOWAGA & LANCASTER
VILLAGE OF DEPEW
COUNTY: ERIE REGION: 05

PIN 5813.61
NY 78
UTILITY QUALITY LEVEL D

BRIDGES

CULVERTS

ALL DIMENSIONS IN ft UNLESS OTHERWISE NOTED

UTILITY PLANS
STA. 67+50 TO STA. 73+50

CONTRACT NUMBER
D264571

DRAWING NO. UTL-7
SHEET NO. 285

IT IS A VIOLATION OF LAW FOR ANY PERSON, UNLESS THEY ARE ACTING UNDER THE DIRECTION OF A LICENSED PROFESSIONAL ENGINEER, ARCHITECT, LANDSCAPE ARCHITECT, OR LAND SURVEYOR, TO ALTER AN ITEM IN ANY WAY. IF AN ITEM BEARING THE STAMP OF A LICENSED PROFESSIONAL IS ALTERED, THE ALTERING ENGINEER, ARCHITECT, LANDSCAPE ARCHITECT, OR LAND SURVEYOR SHALL STAMP THE DOCUMENT AND INCLUDE THE NOTATION "ALTERED BY" FOLLOWED BY THEIR SIGNATURE, THE DATE OF SUCH ALTERATION, AND A SPECIFIC DESCRIPTION OF THE ALTERATION.

NEW YORK STATE OF OPPORTUNITY. Department of Transportation

PROJECT MANAGER S. S. VAIDYA
CHECK R. F. SCHALLER
DRAFTING C. L. CRITES
CHECK R. F. SCHALLER
DESIGN C. L. CRITES
JOB MANAGER R. F. SCHALLER
DESIGN SUPERVISOR S. S. VAIDYA

FILE NAME = 581361_CPH_HWY_UTL-7.dgn
DATE/TIME = 22-JUN-2021 12:47
USER = cortes

PROJECT MANAGER S. S. VAIDYA
CHECK R. F. SCHALLER
DRAFTING C. L. CRITES
CHECK R. F. SCHALLER
DESIGN C. L. CRITES
JOB MANAGER R. F. SCHALLER
DESIGN SUPERVISOR S. S. VAIDYA

FILE NAME = 581361_CPH_HWY_UTL-8.dgn
DATE/TIME = 22-JUN-2021 12:48
USER = crites

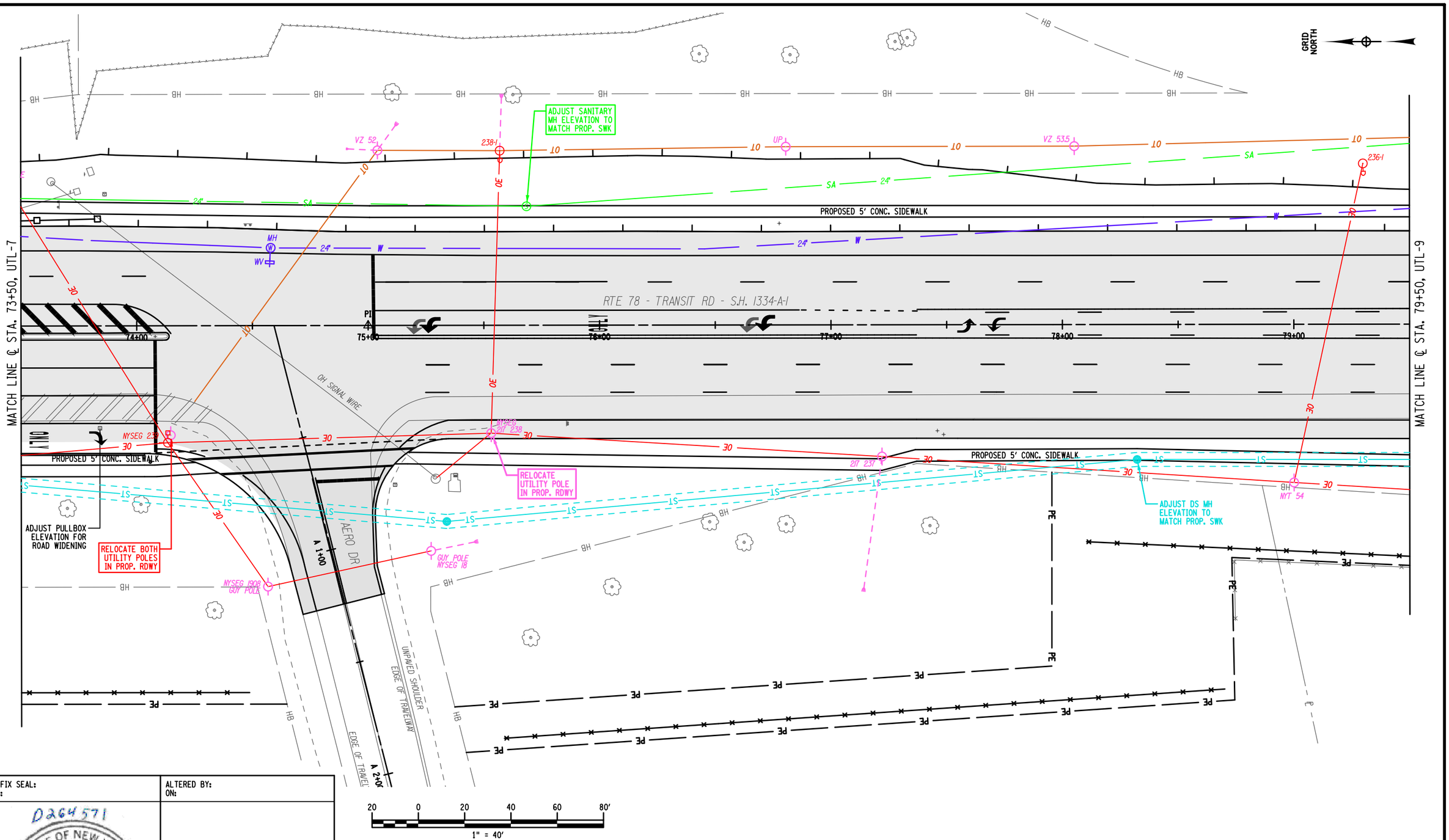

AFFIX SEAL:
ON:

ALTERED BY:
ON:

D264571

STATE OF NEW YORK
ROBERT F. SCHALLER
NO. 082465
LICENSED PROFESSIONAL ENGINEER

AS-BUILT REVISIONS
DESCRIPTION OF ALTERATIONS:

NY 78, TRANSIT ROAD, S.H. 1334A-1
FRENCH ROAD TO WEHRLE DRIVE
TOWNS OF CHEEKTOWAGA & LANCASTER
VILLAGE OF DEPEW
COUNTY: ERIE REGION: 05

PIN 5813.61
NY 78
UTILITY QUALITY LEVEL D

BRIDGES

CULVERTS

ALL DIMENSIONS IN ft UNLESS OTHERWISE NOTED

UTILITY PLANS
STA. 73+50 TO STA. 79+50

CONTRACT NUMBER
D264571

DRAWING NO. UTL-8
SHEET NO. 286

IT IS A VIOLATION OF LAW FOR ANY PERSON, UNLESS THEY ARE ACTING UNDER THE DIRECTION OF A LICENSED PROFESSIONAL ENGINEER, ARCHITECT, LANDSCAPE ARCHITECT, OR LAND SURVEYOR, TO ALTER AN ITEM IN ANY WAY. IF AN ITEM BEARING THE STAMP OF A LICENSED PROFESSIONAL IS ALTERED, THE ALTERING ENGINEER, ARCHITECT, LANDSCAPE ARCHITECT, OR LAND SURVEYOR SHALL STAMP THE DOCUMENT AND INCLUDE THE NOTATION "ALTERED BY" FOLLOWED BY THEIR SIGNATURE, THE DATE OF SUCH ALTERATION, AND A SPECIFIC DESCRIPTION OF THE ALTERATION.

NEW YORK STATE OF OPPORTUNITY. Department of Transportation

PROJECT MANAGER S. S. VAIDYA
CHECK R. F. SCHALLER
DRAFTING C. L. CRITES
CHECK R. F. SCHALLER
DESIGN C. L. CRITES
JOB MANAGER R. F. SCHALLER
DESIGN SUPERVISOR S. S. VAIDYA

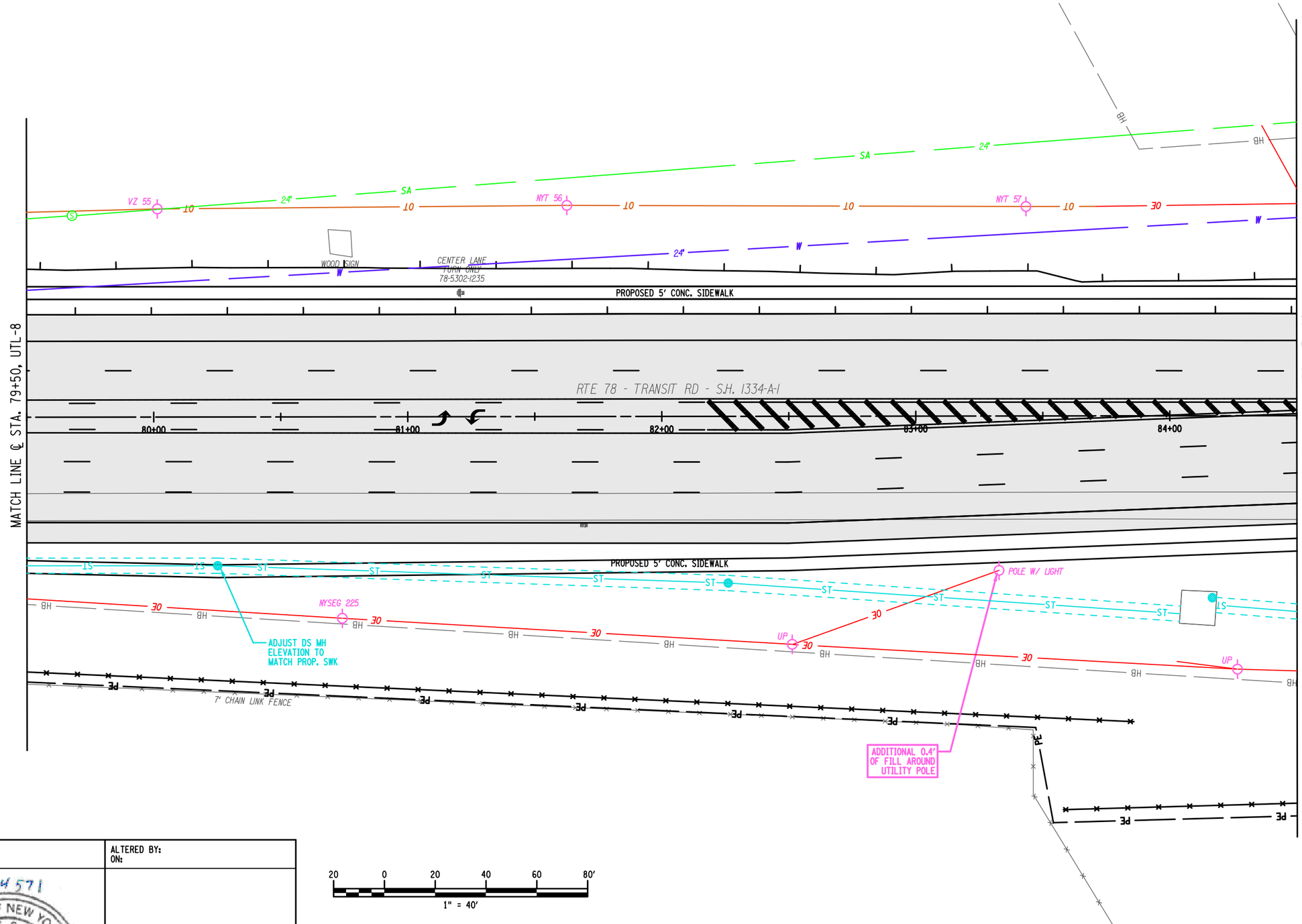

AFFIX SEAL: ON:	ALTERED BY: ON:
D264571 STATE OF NEW YORK ROBERT F. SCHALLER LICENSED PROFESSIONAL ENGINEER NO. 082465	

AS-BUILT REVISIONS DESCRIPTION OF ALTERATIONS:	NY 78, TRANSIT ROAD, S.H. 1334A-1 FRENCH ROAD TO WEHRLE DRIVE TOWNS OF CHEEKTOWAGA & LANCASTER VILLAGE OF DEPEW COUNTY: ERIE REGION: 05	PIN 5813.61 NY 78 UTILITY QUALITY LEVEL D	BRIDGES	CULVERTS	ALL DIMENSIONS IN ft UNLESS OTHERWISE NOTED UTILITY PLANS STA. 79+50 TO STA. 84+50	CONTRACT NUMBER D264571 DRAWING NO. UTL-9 SHEET NO. 287

IT IS A VIOLATION OF LAW FOR ANY PERSON, UNLESS THEY ARE ACTING UNDER THE DIRECTION OF A LICENSED PROFESSIONAL ENGINEER, ARCHITECT, LANDSCAPE ARCHITECT, OR LAND SURVEYOR, TO ALTER AN ITEM IN ANY WAY. IF AN ITEM BEARING THE STAMP OF A LICENSED PROFESSIONAL IS ALTERED, THE ALTERING ENGINEER, ARCHITECT, LANDSCAPE ARCHITECT, OR LAND SURVEYOR SHALL STAMP THE DOCUMENT AND INCLUDE THE NOTATION "ALTERED BY" FOLLOWED BY THEIR SIGNATURE, THE DATE OF SUCH ALTERATION, AND A SPECIFIC DESCRIPTION OF THE ALTERATION.

NEW YORK STATE OF OPPORTUNITY. Department of Transportation

FILE NAME = 581361_CPH_HWY_UTL-9.dgn
DATE/TIME = 22-JUN-2021 12:48
USER = cortes

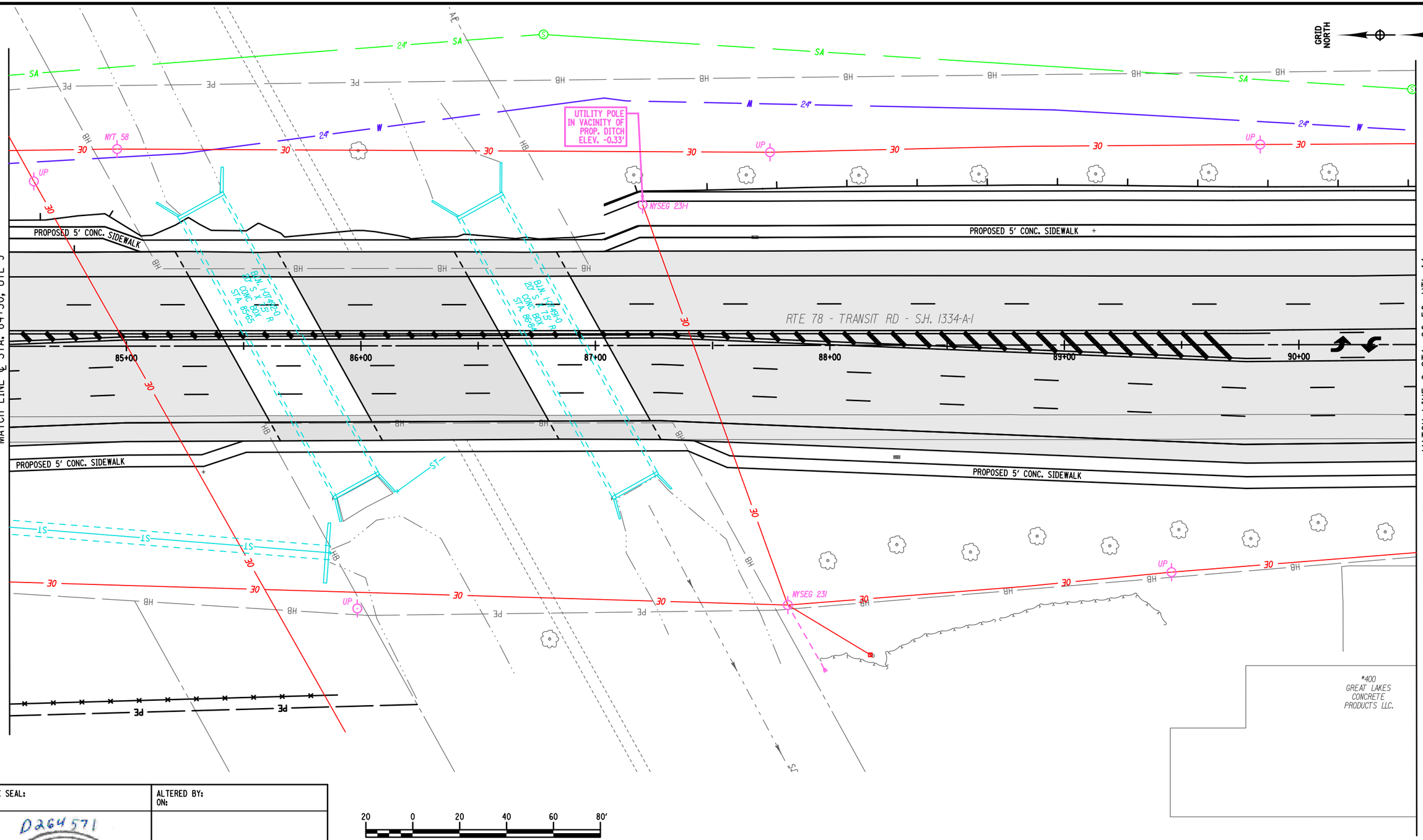

PROJECT MANAGER S. S. VAIDYA
CHECK R. F. SCHALLER
DRAFTING C. L. CRITES
CHECK R. F. SCHALLER
DESIGN C. L. CRITES
JOB MANAGER R. F. SCHALLER
DESIGN SUPERVISOR S. S. VAIDYA

FILE NAME = 581361_CPH_HWY_UTL-10.dgn
DATE/TIME = 22-JUN-2021 12:48
USER = corites

AFFIX SEAL:
ON:

D264571

STATE OF NEW YORK
ROBERT F. SCHALLER
NO. 082465
LICENSED PROFESSIONAL ENGINEER

ALTERED BY:
ON:

AS-BUILT REVISIONS
DESCRIPTION OF ALTERATIONS:

NY 78, TRANSIT ROAD, S.H. 1334A-1
FRENCH ROAD TO WEHRLE DRIVE
TOWNS OF CHEEKTOWAGA & LANCASTER
VILLAGE OF DEPEW
COUNTY: ERIE REGION: 05

PIN 5813.61
NY 78
UTILITY QUALITY LEVEL D

BRIDGES

CULVERTS

ALL DIMENSIONS IN ft UNLESS OTHERWISE NOTED

UTILITY PLANS
STA. 84+50 TO STA. 90+50

CONTRACT NUMBER
D264571

DRAWING NO. UTL-10
SHEET NO. 288

IT IS A VIOLATION OF LAW FOR ANY PERSON, UNLESS THEY ARE ACTING UNDER THE DIRECTION OF A LICENSED PROFESSIONAL ENGINEER, ARCHITECT, LANDSCAPE ARCHITECT, OR LAND SURVEYOR, TO ALTER AN ITEM IN ANY WAY. IF AN ITEM BEARING THE STAMP OF A LICENSED PROFESSIONAL IS ALTERED, THE ALTERING ENGINEER, ARCHITECT, LANDSCAPE ARCHITECT, OR LAND SURVEYOR SHALL STAMP THE DOCUMENT AND INCLUDE THE NOTATION "ALTERED BY" FOLLOWED BY THEIR SIGNATURE, THE DATE OF SUCH ALTERATION, AND A SPECIFIC DESCRIPTION OF THE ALTERATION.

NEW YORK STATE OF OPPORTUNITY. Department of Transportation

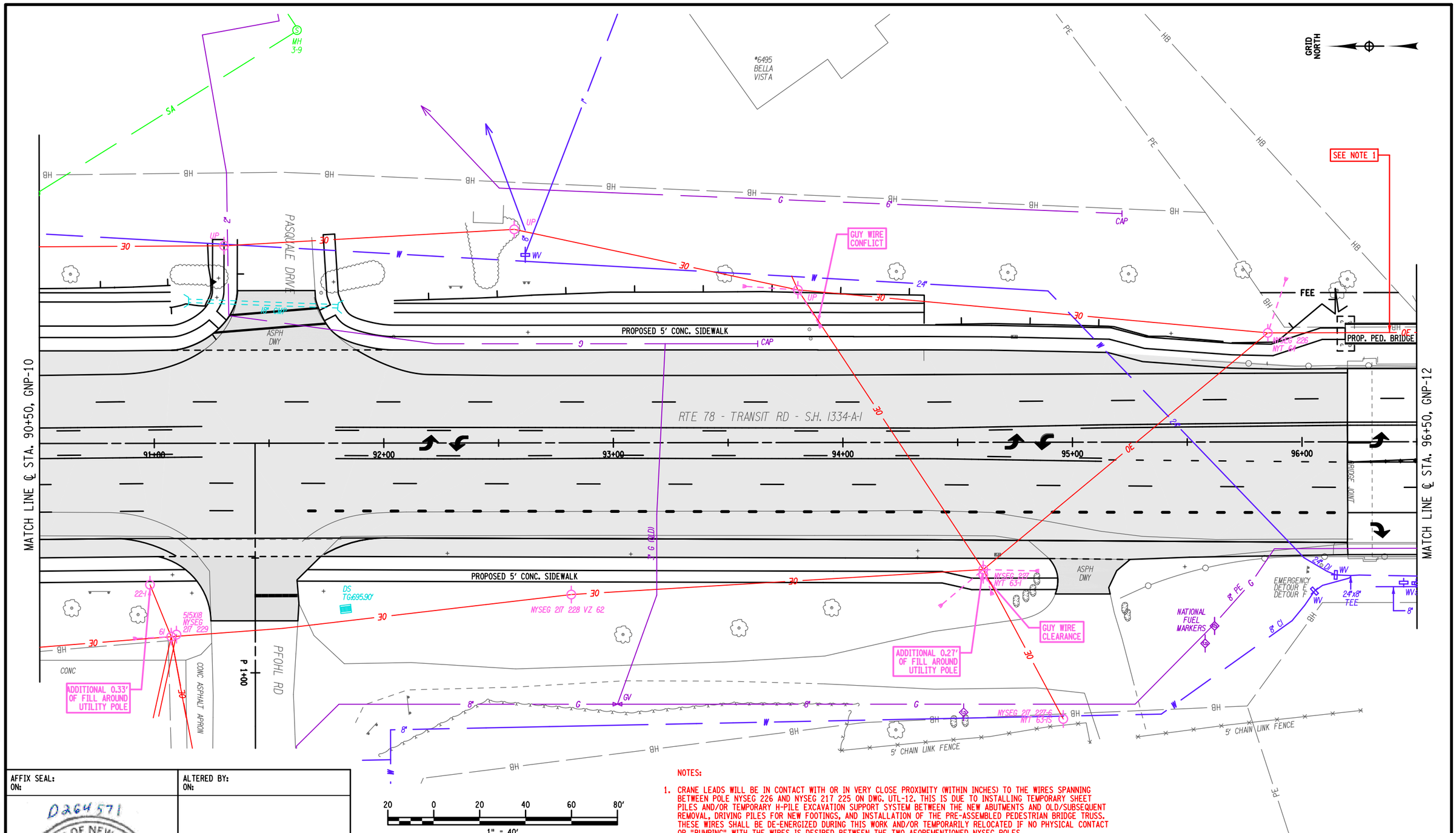

NOTES:

1. CRANE LEADS WILL BE IN CONTACT WITH OR IN VERY CLOSE PROXIMITY (WITHIN INCHES) TO THE WIRES SPANNING BETWEEN POLE NYSEG 226 AND NYSEG 217 225 ON DWG. UTL-12. THIS IS DUE TO INSTALLING TEMPORARY SHEET PILES AND/OR TEMPORARY H-PILE EXCAVATION SUPPORT SYSTEM BETWEEN THE NEW ABUTMENTS AND OLD/SUBSEQUENT REMOVAL, DRIVING PILES FOR NEW FOOTINGS, AND INSTALLATION OF THE PRE-ASSEMBLED PEDESTRIAN BRIDGE TRUSS. THESE WIRES SHALL BE DE-ENERGIZED DURING THIS WORK AND/OR TEMPORARILY RELOCATED IF NO PHYSICAL CONTACT OR "BUMPING" WITH THE WIRES IS DESIRED BETWEEN THE TWO AFOREMENTIONED NYSEG POLES.

AFFIX SEAL:
ON:

D264571
STATE OF NEW YORK
ROBERT F. SCHALLER
LICENSED PROFESSIONAL ENGINEER
NO. 082465

ALTERED BY:
ON:

AS-BUILT REVISIONS
DESCRIPTION OF ALTERATIONS:

NY 78, TRANSIT ROAD, S.H. 1334A-1	PIN 5813.61	BRIDGES	CULVERTS	ALL DIMENSIONS IN ft UNLESS OTHERWISE NOTED
FRENCH ROAD TO WEHRLE DRIVE	NY 78			UTILITY PLANS
TOWNS OF CHEEKTOWAGA & LANCASTER	UTILITY QUALITY LEVEL D			STA. 90+50 TO STA. 96+50
VILLAGE OF DEPEW				
COUNTY: ERIE REGION: 05				

CONTRACT NUMBER
D264571

DRAWING NO. UTL-11
SHEET NO. 289

IT IS A VIOLATION OF LAW FOR ANY PERSON, UNLESS THEY ARE ACTING UNDER THE DIRECTION OF A LICENSED PROFESSIONAL ENGINEER, ARCHITECT, LANDSCAPE ARCHITECT, OR LAND SURVEYOR, TO ALTER AN ITEM IN ANY WAY. IF AN ITEM BEARING THE STAMP OF A LICENSED PROFESSIONAL IS ALTERED, THE ALTERING ENGINEER, ARCHITECT, LANDSCAPE ARCHITECT, OR LAND SURVEYOR SHALL STAMP THE DOCUMENT AND INCLUDE THE NOTATION "ALTERED BY" FOLLOWED BY THEIR SIGNATURE, THE DATE OF SUCH ALTERATION, AND A SPECIFIC DESCRIPTION OF THE ALTERATION.

NEW YORK STATE OF OPPORTUNITY. Department of Transportation

PROJECT MANAGER S. S. VAIDYA
CHECK R. F. SCHALLER
DRAFTING C. L. CRITES
CHECK R. F. SCHALLER
DESIGN C. L. CRITES
JOB MANAGER R. F. SCHALLER
DESIGN SUPERVISOR S. S. VAIDYA

FILE NAME = 581361_CPH_HWY_UTL-11.dgn
DATE/TIME = 22-JUN-2021 12:48
USER = cortes

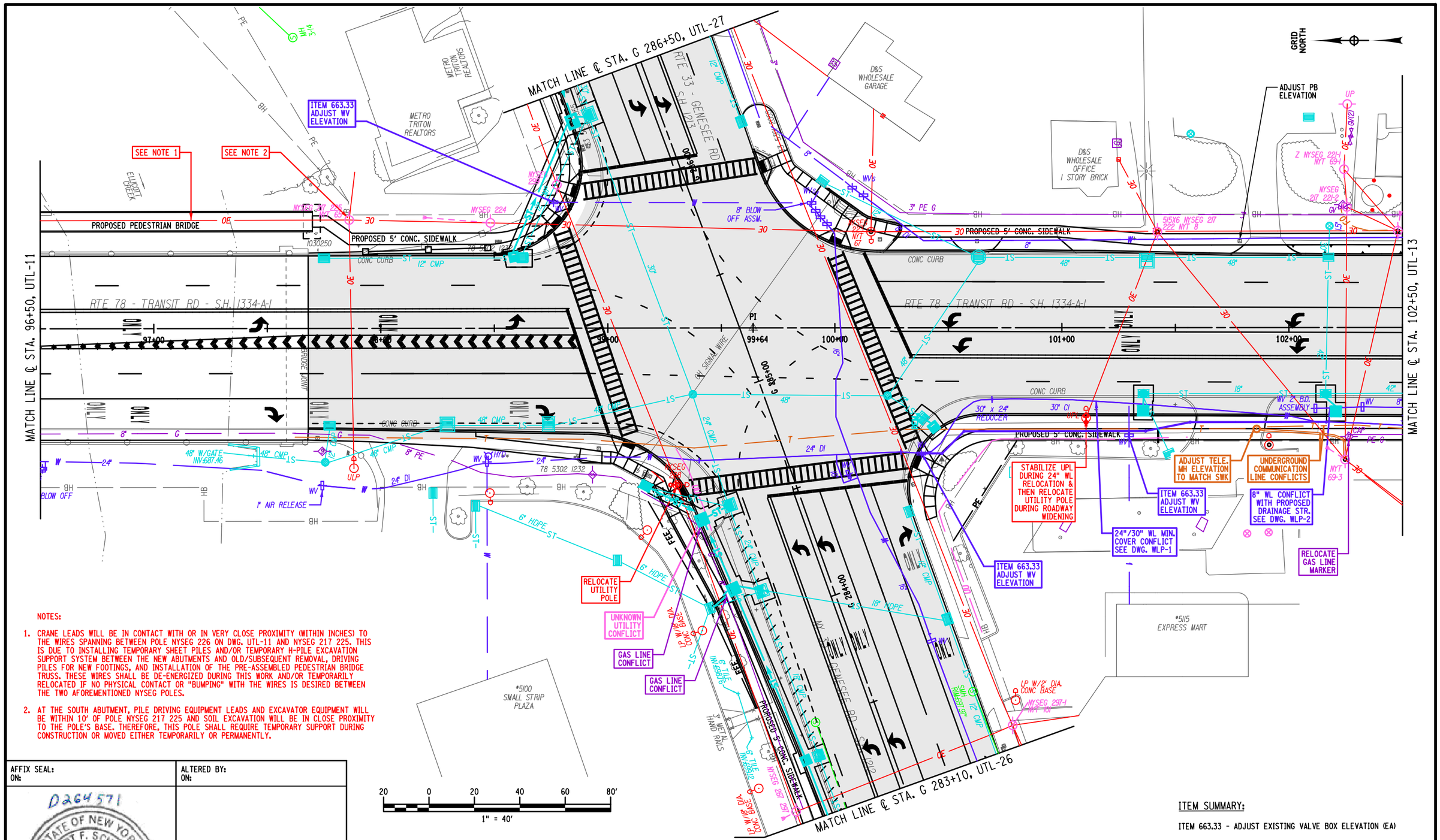

NOTES:

1. CRANE LEADS WILL BE IN CONTACT WITH OR IN VERY CLOSE PROXIMITY (WITHIN INCHES) TO THE WIRES SPANNING BETWEEN POLE NYSEG 226 ON DWG. UTL-11 AND NYSEG 217 225. THIS IS DUE TO INSTALLING TEMPORARY SHEET PILES AND/OR TEMPORARY H-PILE EXCAVATION SUPPORT SYSTEM BETWEEN THE NEW ABUTMENTS AND OLD/SUBSEQUENT REMOVAL, DRIVING PILES FOR NEW FOOTINGS, AND INSTALLATION OF THE PRE-ASSEMBLED PEDESTRIAN BRIDGE TRUSS. THESE WIRES SHALL BE DE-ENERGIZED DURING THIS WORK AND/OR TEMPORARILY RELOCATED IF NO PHYSICAL CONTACT OR "BUMPING" WITH THE WIRES IS DESIRED BETWEEN THE TWO AFOREMENTIONED NYSEG POLES.

2. AT THE SOUTH ABUTMENT, PILE DRIVING EQUIPMENT LEADS AND EXCAVATOR EQUIPMENT WILL BE WITHIN 10' OF POLE NYSEG 217 225 AND SOIL EXCAVATION WILL BE IN CLOSE PROXIMITY TO THE POLE'S BASE. THEREFORE, THIS POLE SHALL REQUIRE TEMPORARY SUPPORT DURING CONSTRUCTION OR MOVED EITHER TEMPORARILY OR PERMANENTLY.

ITEM SUMMARY:

ITEM 663.33 - ADJUST EXISTING VALVE BOX ELEVATION (EA)

AFFIX SEAL:
ON:

D264571

STATE OF NEW YORK · ROBERT F. SCHALLER · NO. 082465 · LICENSED PROFESSIONAL ENGINEER

ALTERED BY:
ON:

AS-BUILT REVISIONS
DESCRIPTION OF ALTERATIONS:

NY 78, TRANSIT ROAD, S.H. 1334A-1	PIN 5813.61	BRIDGES	CULVERTS	ALL DIMENSIONS IN ft UNLESS OTHERWISE NOTED	CONTRACT NUMBER
FRENCH ROAD TO WEHRLE DRIVE	NY 78			UTILITY PLANS	D264571
TOWNS OF CHEEKTOWAGA & LANCASTER	UTILITY QUALITY LEVEL D			STA. 96+50 TO STA. 102+50	DRAWING NO. UTL-12
VILLAGE OF DEPEW					SHEET NO. 290
COUNTY: ERIE REGION: 05					

IT IS A VIOLATION OF LAW FOR ANY PERSON, UNLESS THEY ARE ACTING UNDER THE DIRECTION OF A LICENSED PROFESSIONAL ENGINEER, ARCHITECT, LANDSCAPE ARCHITECT, OR LAND SURVEYOR, TO ALTER AN ITEM IN ANY WAY. IF AN ITEM BEARING THE STAMP OF A LICENSED PROFESSIONAL IS ALTERED, THE ALTERING ENGINEER, ARCHITECT, LANDSCAPE ARCHITECT, OR LAND SURVEYOR SHALL STAMP THE DOCUMENT AND INCLUDE THE NOTATION "ALTERED BY" FOLLOWED BY THEIR SIGNATURE, THE DATE OF SUCH ALTERATION, AND A SPECIFIC DESCRIPTION OF THE ALTERATION.

NEW YORK STATE OF OPPORTUNITY. Department of Transportation

DESIGN SUPERVISOR S. S. VAIDYA
JOB MANAGER R. F. SCHALLER
DESIGN C. L. CRITES
CHECK R. F. SCHALLER
DRAFTING C. L. CRITES
CHECK R. F. SCHALLER
PROJECT MANAGER S. S. VAIDYA

FILE NAME = 581361_CPH_HWY_UTL-12.dgn
DATE/TIME = 22-JUN-2021 12:48
USER = ccrites

PROJECT MANAGER S. S. VAIDYA
CHECK R. F. SCHALLER
DRAFTING C. L. CRITES
CHECK R. F. SCHALLER
DESIGN C. L. CRITES
JOB MANAGER R. F. SCHALLER
DESIGN SUPERVISOR S. S. VAIDYA

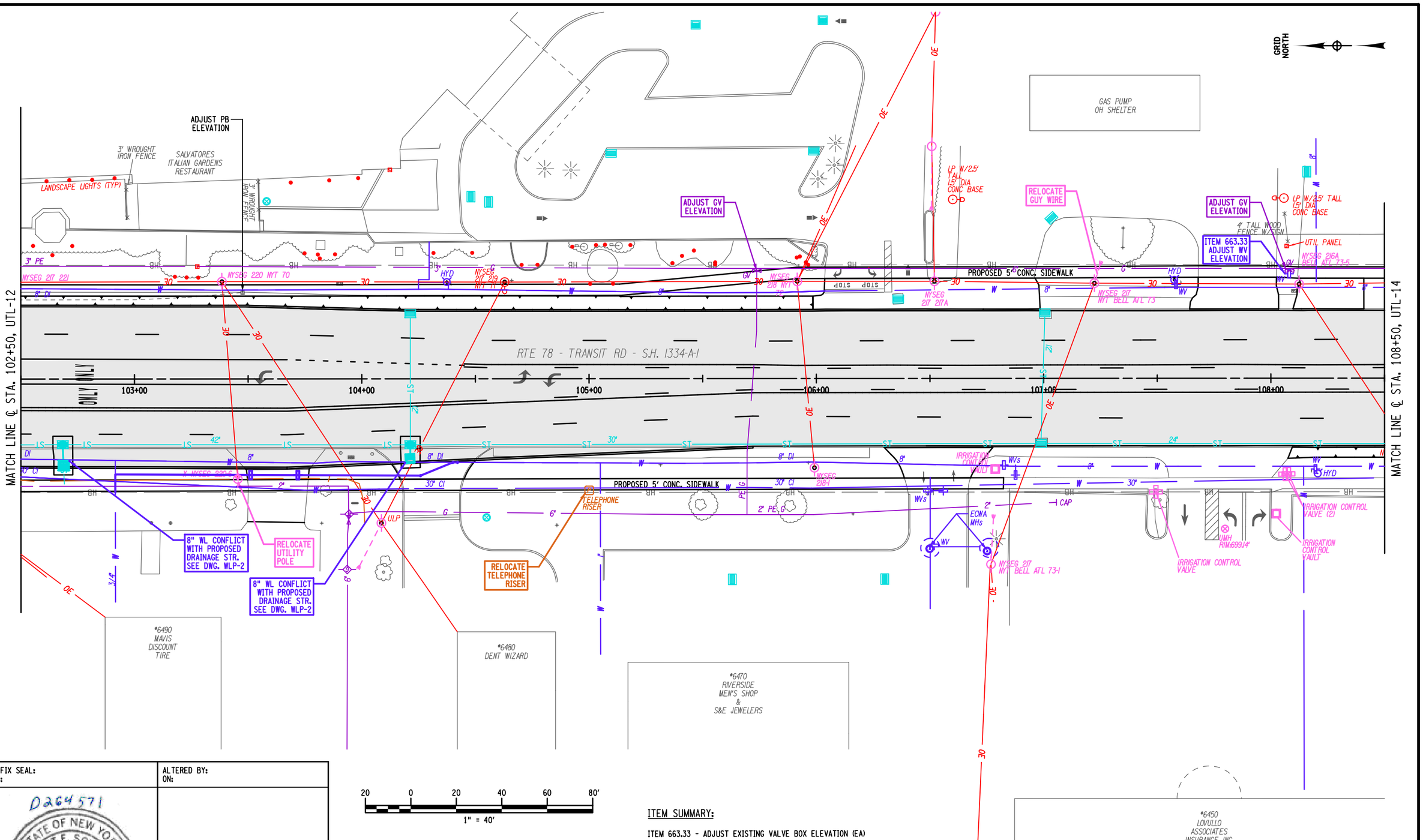

20 0 20 40 60 80'
1" = 40'

ITEM SUMMARY:

ITEM 663.33 - ADJUST EXISTING VALVE BOX ELEVATION (EA)

AFFIX SEAL:
ON:

ALTERED BY:
ON:

D264571

STATE OF NEW YORK
ROBERT F. SCHALLER
LICENSED PROFESSIONAL ENGINEER
NO. 082465

AS-BUILT REVISIONS
DESCRIPTION OF ALTERATIONS:

NY 78, TRANSIT ROAD, S.H. 1334A-1	PIN 5813.61	BRIDGES	CULVERTS	ALL DIMENSIONS IN ft UNLESS OTHERWISE NOTED	CONTRACT NUMBER
FRENCH ROAD TO WEHRLE DRIVE	NY 78			UTILITY PLANS	D264571
TOWNS OF CHEEKTOWAGA & LANCASTER	UTILITY QUALITY LEVEL D			STA. 102+50 TO STA. 108+50	
VILLAGE OF DEPEW					DRAWING NO. UTL-13
COUNTY: ERIE REGION: 05					SHEET NO. 291

IT IS A VIOLATION OF LAW FOR ANY PERSON, UNLESS THEY ARE ACTING UNDER THE DIRECTION OF A LICENSED PROFESSIONAL ENGINEER, ARCHITECT, LANDSCAPE ARCHITECT, OR LAND SURVEYOR, TO ALTER AN ITEM IN ANY WAY. IF AN ITEM BEARING THE STAMP OF A LICENSED PROFESSIONAL IS ALTERED, THE ALTERING ENGINEER, ARCHITECT, LANDSCAPE ARCHITECT, OR LAND SURVEYOR SHALL STAMP THE DOCUMENT AND INCLUDE THE NOTATION "ALTERED BY" FOLLOWED BY THEIR SIGNATURE, THE DATE OF SUCH ALTERATION, AND A SPECIFIC DESCRIPTION OF THE ALTERATION.

NEW YORK STATE OF OPPORTUNITY. Department of Transportation

FILE NAME = 581361_CPH_HWY_UTL-13.dgn
DATE/TIME = 22-JUN-2021 12:48
USER = ccrites

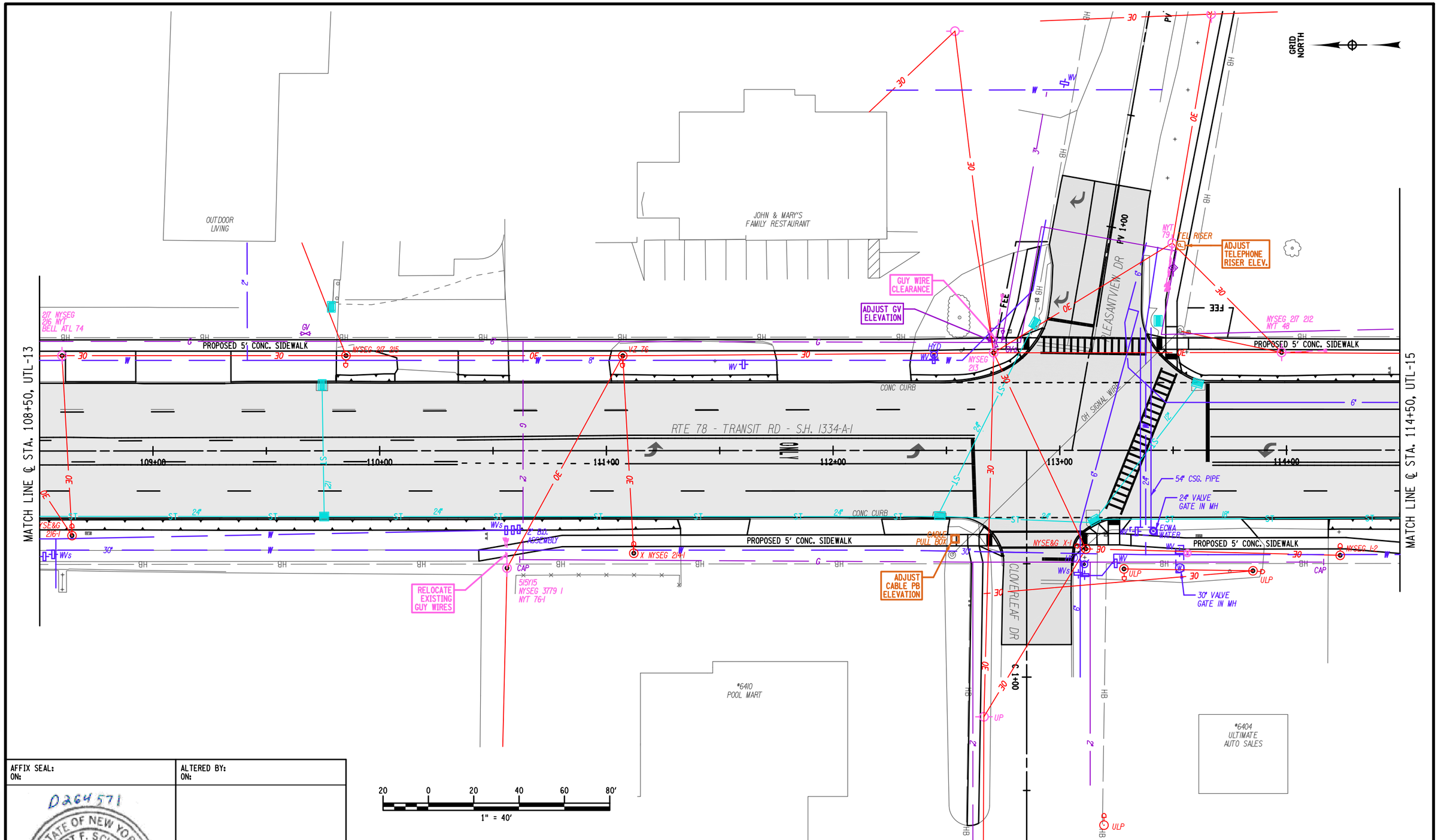

AFFIX SEAL: ON:	ALTERED BY: ON:
D264571 STATE OF NEW YORK ROBERT F. SCHALLER NO. 082465 LICENSED PROFESSIONAL ENGINEER	

AS-BUILT REVISIONS
DESCRIPTION OF ALTERATIONS:

NY 78, TRANSIT ROAD, S.H. 1334A-1
FRENCH ROAD TO WEHRLE DRIVE
TOWNS OF CHEEKTOWAGA & LANCASTER
VILLAGE OF DEPEW
COUNTY: ERIE REGION: 05

PIN 5813.61
NY 78
UTILITY QUALITY LEVEL D

BRIDGES

CULVERTS

ALL DIMENSIONS IN ft UNLESS OTHERWISE NOTED

UTILITY PLANS
STA. 108+50 TO STA. 114+50

CONTRACT NUMBER
D264571

DRAWING NO. UTL-14
SHEET NO. 292

IT IS A VIOLATION OF LAW FOR ANY PERSON, UNLESS THEY ARE ACTING UNDER THE DIRECTION OF A LICENSED PROFESSIONAL ENGINEER, ARCHITECT, LANDSCAPE ARCHITECT, OR LAND SURVEYOR, TO ALTER AN ITEM IN ANY WAY. IF AN ITEM BEARING THE STAMP OF A LICENSED PROFESSIONAL IS ALTERED, THE ALTERING ENGINEER, ARCHITECT, LANDSCAPE ARCHITECT, OR LAND SURVEYOR SHALL STAMP THE DOCUMENT AND INCLUDE THE NOTATION "ALTERED BY" FOLLOWED BY THEIR SIGNATURE, THE DATE OF SUCH ALTERATION, AND A SPECIFIC DESCRIPTION OF THE ALTERATION.

NEW YORK STATE OF OPPORTUNITY. Department of Transportation

PROJECT MANAGER S. S. VAIDYA
CHECK R. F. SCHALLER
DRAFTING C. L. CRITES
CHECK R. F. SCHALLER
DESIGN C. L. CRITES
JOB MANAGER R. F. SCHALLER
DESIGN SUPERVISOR S. S. VAIDYA

FILE NAME = 581361_CPH_HWY_UTL-14.dgn
DATE/TIME = 22-JUN-2021 12:48
USER = ccrites

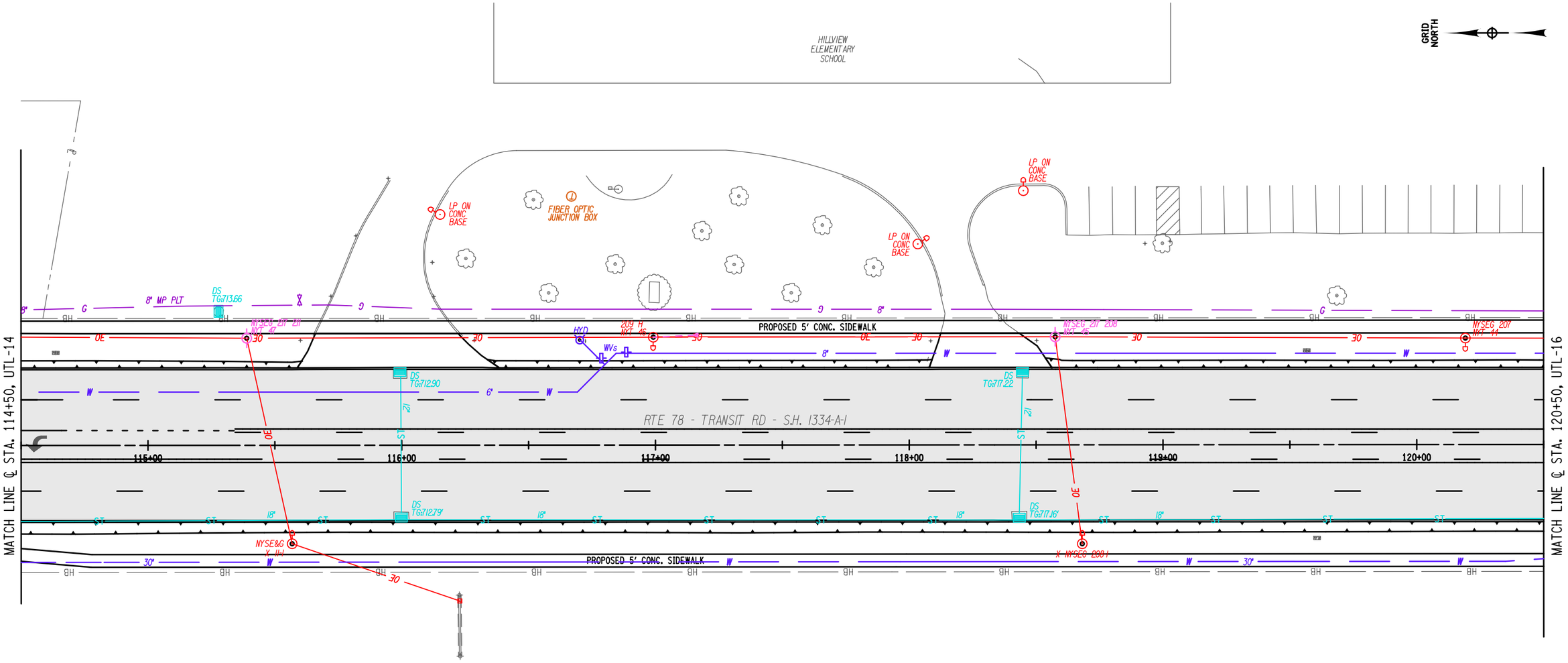

20 0 20 40 60 80'

1" = 40'

AFFIX SEAL:
ON:

ALTERED BY:
ON:

D264571

STATE OF NEW YORK
ROBERT F. SCHALLER
NO. 082463
LICENSED PROFESSIONAL ENGINEER

AS-BUILT REVISIONS
DESCRIPTION OF ALTERATIONS:

NY 78, TRANSIT ROAD, S.H. 1334A-1
FRENCH ROAD TO WEHRLE DRIVE
TOWNS OF CHEEKTOWAGA & LANCASTER
VILLAGE OF DEPEW
COUNTY: ERIE REGION: 05

PIN 5813.61
NY 78
UTILITY QUALITY LEVEL D

BRIDGES

CULVERTS

ALL DIMENSIONS IN ft UNLESS OTHERWISE NOTED

UTILITY PLANS
STA. 114+50 TO STA. 120+50

CONTRACT NUMBER
D264571

DRAWING NO. UTL-15
SHEET NO. 293

IT IS A VIOLATION OF LAW FOR ANY PERSON, UNLESS THEY ARE ACTING UNDER THE DIRECTION OF A LICENSED PROFESSIONAL ENGINEER, ARCHITECT, LANDSCAPE ARCHITECT, OR LAND SURVEYOR, TO ALTER AN ITEM IN ANY WAY. IF AN ITEM BEARING THE STAMP OF A LICENSED PROFESSIONAL IS ALTERED, THE ALTERING ENGINEER, ARCHITECT, LANDSCAPE ARCHITECT, OR LAND SURVEYOR SHALL STAMP THE DOCUMENT AND INCLUDE THE NOTATION "ALTERED BY" FOLLOWED BY THEIR SIGNATURE, THE DATE OF SUCH ALTERATION, AND A SPECIFIC DESCRIPTION OF THE ALTERATION.

NEW YORK STATE OF OPPORTUNITY. Department of Transportation

PROJECT MANAGER S. S. VAIDYA
CHECK R. F. SCHALLER
DRAFTING C. L. CRITES
CHECK R. F. SCHALLER
DESIGN C. L. CRITES
JOB MANAGER R. F. SCHALLER
DESIGN SUPERVISOR S. S. VAIDYA

FILE NAME = 581361_CPH_HWY_UTL-15.dgn
DATE/TIME = 22-JUN-2021 12:48
USER = ccrites

PROJECT MANAGER S. S. VAIDYA
CHECK R. F. SCHALLER
DRAFTING C. L. CRITES
CHECK R. F. SCHALLER
DESIGN C. L. CRITES
JOB MANAGER R. F. SCHALLER
DESIGN SUPERVISOR S. S. VAIDYA

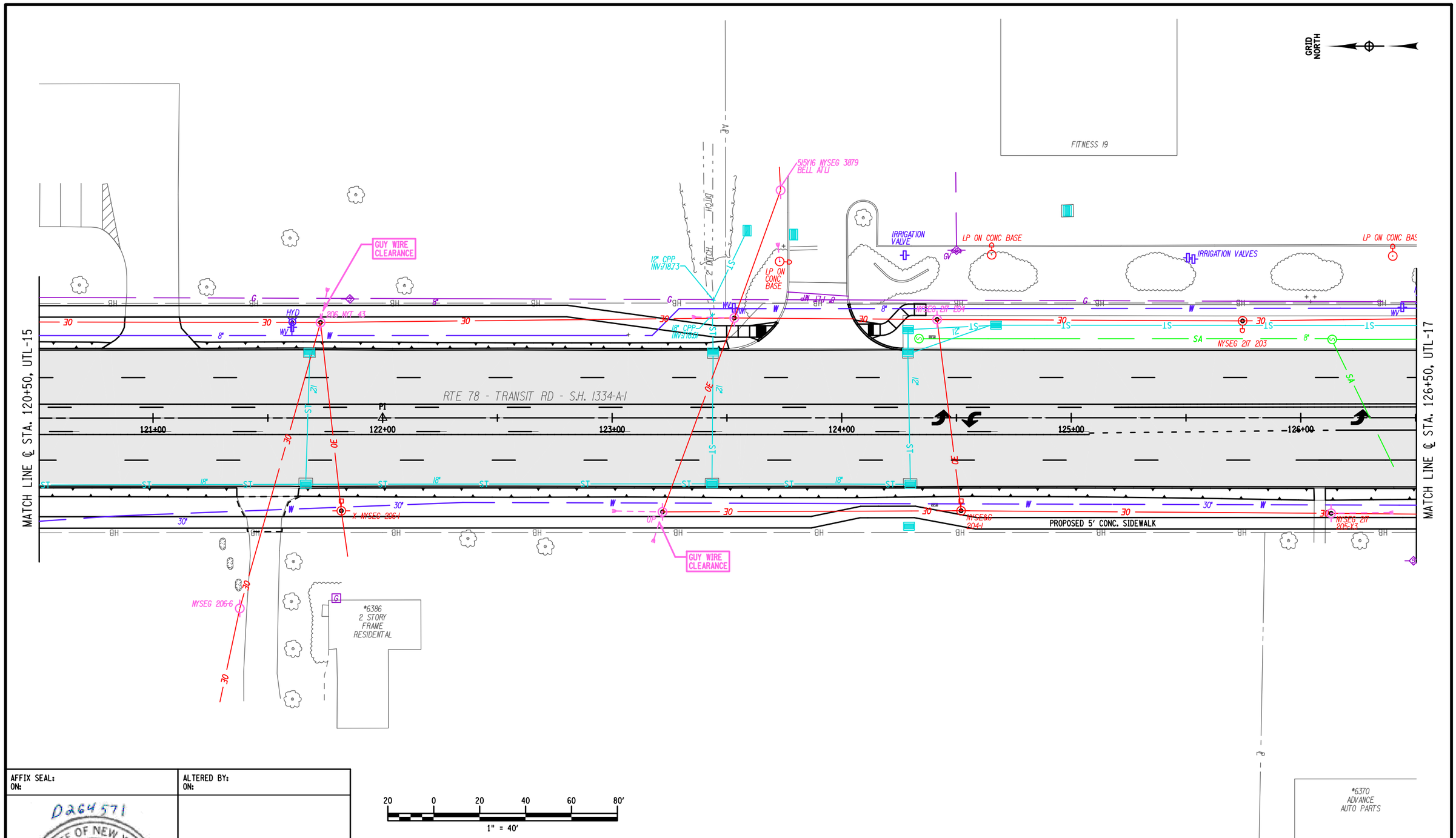

20 0 20 40 60 80'
1" = 40'

AFFIX SEAL: ON:	ALTERED BY: ON:
D264571 STATE OF NEW YORK ROBERT F. SCHALLER LICENSED PROFESSIONAL ENGINEER NO. 082465	

AS-BUILT REVISIONS DESCRIPTION OF ALTERATIONS:	NY 78, TRANSIT ROAD, S.H. 1334A-1 FRENCH ROAD TO WEHRLE DRIVE TOWNS OF CHEEKTOWAGA & LANCASTER VILLAGE OF DEPEW COUNTY: ERIE REGION: 05	PIN 5813.61 NY 78 UTILITY QUALITY LEVEL D	BRIDGES	CULVERTS	ALL DIMENSIONS IN ft UNLESS OTHERWISE NOTED UTILITY PLANS STA. 120+50 TO STA. 126+50	CONTRACT NUMBER D264571 DRAWING NO. UTL-16 SHEET NO. 294

IT IS A VIOLATION OF LAW FOR ANY PERSON, UNLESS THEY ARE ACTING UNDER THE DIRECTION OF A LICENSED PROFESSIONAL ENGINEER, ARCHITECT, LANDSCAPE ARCHITECT, OR LAND SURVEYOR, TO ALTER AN ITEM IN ANY WAY. IF AN ITEM BEARING THE STAMP OF A LICENSED PROFESSIONAL IS ALTERED, THE ALTERING ENGINEER, ARCHITECT, LANDSCAPE ARCHITECT, OR LAND SURVEYOR SHALL STAMP THE DOCUMENT AND INCLUDE THE NOTATION "ALTERED BY" FOLLOWED BY THEIR SIGNATURE, THE DATE OF SUCH ALTERATION, AND A SPECIFIC DESCRIPTION OF THE ALTERATION.

NEW YORK STATE OF OPPORTUNITY. Department of Transportation

FILE NAME = 581361_CPH_HWY_UTL-16.dgn
DATE/TIME = 22-JUN-2021 12:48
USER = corites

PROJECT MANAGER S. S. VAIDYA
CHECK R. F. SCHALLER
DRAFTING C. L. CRITES
DESIGN C. L. CRITES
JOB MANAGER R. F. SCHALLER
DESIGN SUPERVISOR S. S. VAIDYA

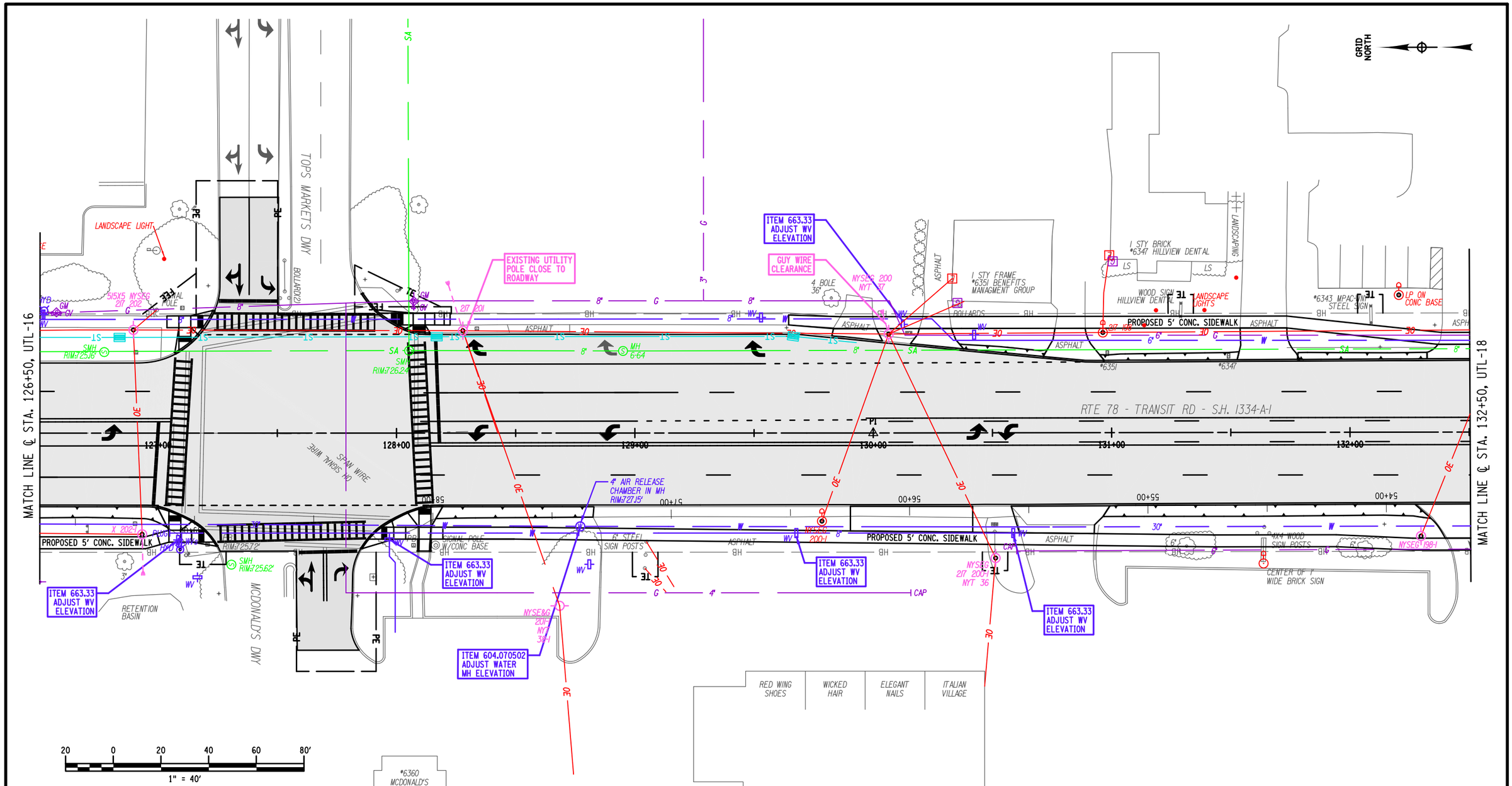

AFFIX SEAL:
ON:

ALTERED BY:
ON:

D264571
STATE OF NEW YORK
ROBERT F. SCHALLER
NO. 082465
LICENSED PROFESSIONAL ENGINEER

ITEM SUMMARY:

ITEM 663.33 - ADJUST EXISTING VALVE BOX ELEVATION (EA)

ITEM 604.070502 - ALTERING DRAINAGE STRUCTURES, LEACHING BASINS AND MANHOLES (EA)

AS-BUILT REVISIONS
DESCRIPTION OF ALTERATIONS:

NY 78, TRANSIT ROAD, S.H. 1334A-1
FRENCH ROAD TO WEHRLE DRIVE
TOWNS OF CHEEKTOWAGA & LANCASTER
VILLAGE OF DEPEW
COUNTY: ERIE REGION: 05

PIN 5813.61
NY 78
UTILITY QUALITY LEVEL D

BRIDGES

CULVERTS

ALL DIMENSIONS IN ft UNLESS OTHERWISE NOTED

UTILITY PLANS
STA. 126+50 TO STA. 132+50

CONTRACT NUMBER
D264571

DRAWING NO. UTL-17
SHEET NO. 295

IT IS A VIOLATION OF LAW FOR ANY PERSON, UNLESS THEY ARE ACTING UNDER THE DIRECTION OF A LICENSED PROFESSIONAL ENGINEER, ARCHITECT, LANDSCAPE ARCHITECT, OR LAND SURVEYOR, TO ALTER AN ITEM IN ANY WAY. IF AN ITEM BEARING THE STAMP OF A LICENSED PROFESSIONAL IS ALTERED, THE ALTERING ENGINEER, ARCHITECT, LANDSCAPE ARCHITECT, OR LAND SURVEYOR SHALL STAMP THE DOCUMENT AND INCLUDE THE NOTATION "ALTERED BY" FOLLOWED BY THEIR SIGNATURE, THE DATE OF SUCH ALTERATION, AND A SPECIFIC DESCRIPTION OF THE ALTERATION.

NEW YORK STATE OF OPPORTUNITY. Department of Transportation

FILE NAME = 581361_CPH_HWY_UTL-17.dgn
DATE/TIME = 22-JUN-2021 12:48
USER = ccrites

PROJECT MANAGER S. S. VAIDYA
CHECK R. F. SCHALLER
DRAFTING C. L. CRITES
CHECK R. F. SCHALLER
DESIGN C. L. CRITES
JOB MANAGER R. F. SCHALLER
DESIGN SUPERVISOR S. S. VAIDYA

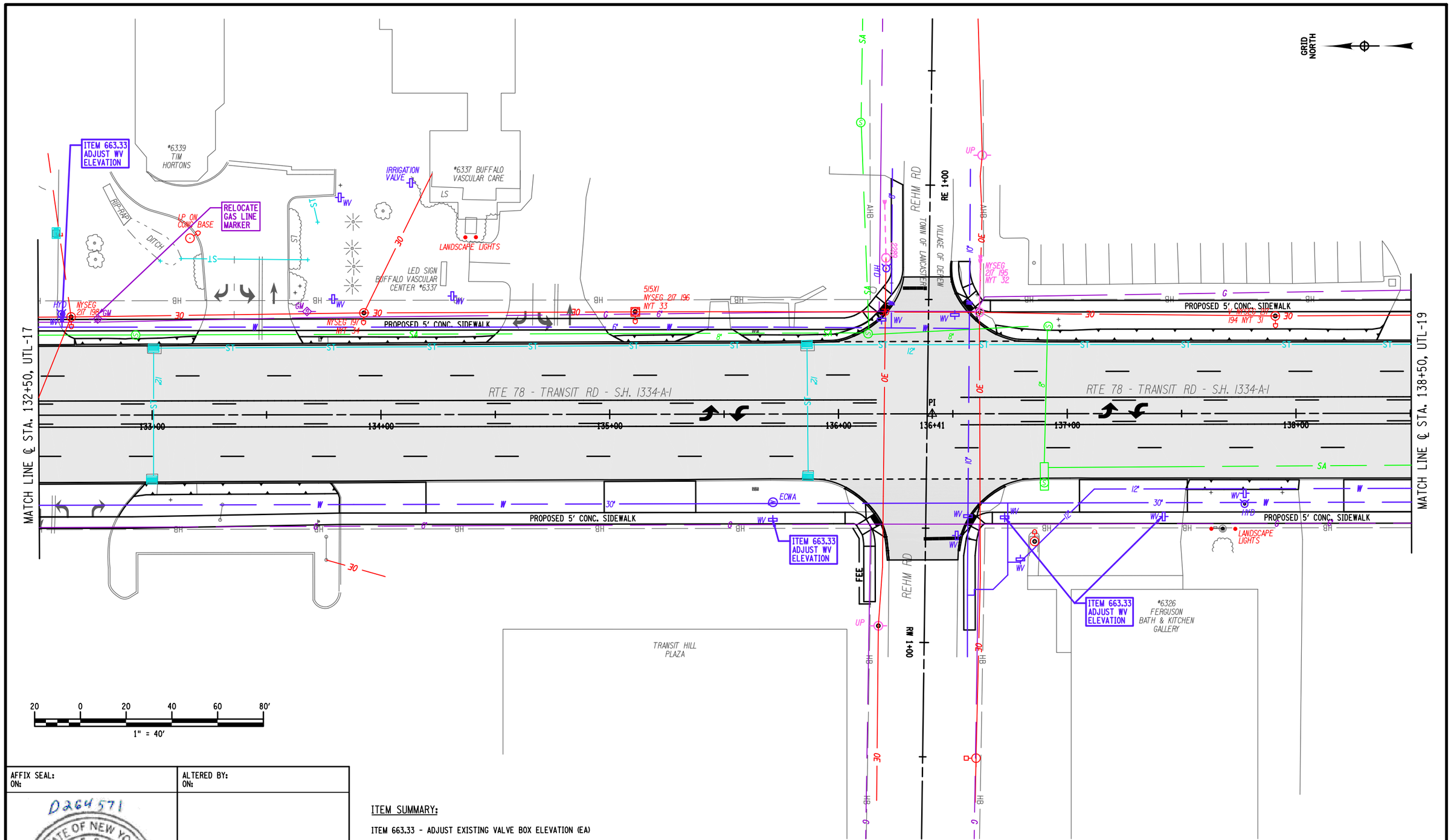

AFFIX SEAL: ON:	ALTERED BY: ON:
D264571 STATE OF NEW YORK ROBERT F. SCHALLER NO. 082465 LICENSED PROFESSIONAL ENGINEER	

ITEM SUMMARY:

ITEM 663.33 - ADJUST EXISTING VALVE BOX ELEVATION (EA)

AS-BUILT REVISIONS DESCRIPTION OF ALTERATIONS:	NY 78, TRANSIT ROAD, S.H. 1334A-1	PIN 5813.61 NY 78 UTILITY QUALITY LEVEL D	BRIDGES	CULVERTS	ALL DIMENSIONS IN ft UNLESS OTHERWISE NOTED	CONTRACT NUMBER D264571
	FRENCH ROAD TO WEHRLE DRIVE				UTILITY PLANS STA. 132+50 TO STA. 138+50	DRAWING NO. UTL-18
	TOWNS OF CHEEKTOWAGA & LANCASTER					SHEET NO. 296
	VILLAGE OF DEPEW					
	COUNTY: ERIE REGION: 05					

IT IS A VIOLATION OF LAW FOR ANY PERSON, UNLESS THEY ARE ACTING UNDER THE DIRECTION OF A LICENSED PROFESSIONAL ENGINEER, ARCHITECT, LANDSCAPE ARCHITECT, OR LAND SURVEYOR, TO ALTER AN ITEM IN ANY WAY. IF AN ITEM BEARING THE STAMP OF A LICENSED PROFESSIONAL IS ALTERED, THE ALTERING ENGINEER, ARCHITECT, LANDSCAPE ARCHITECT, OR LAND SURVEYOR SHALL STAMP THE DOCUMENT AND INCLUDE THE NOTATION "ALTERED BY" FOLLOWED BY THEIR SIGNATURE, THE DATE OF SUCH ALTERATION, AND A SPECIFIC DESCRIPTION OF THE ALTERATION.

NEW YORK STATE OF OPPORTUNITY. Department of Transportation

FILE NAME = 581361_CPH_HWY_UTL-18.dgn
DATE/TIME = 22-JUN-2021 12:48
USER = cartes

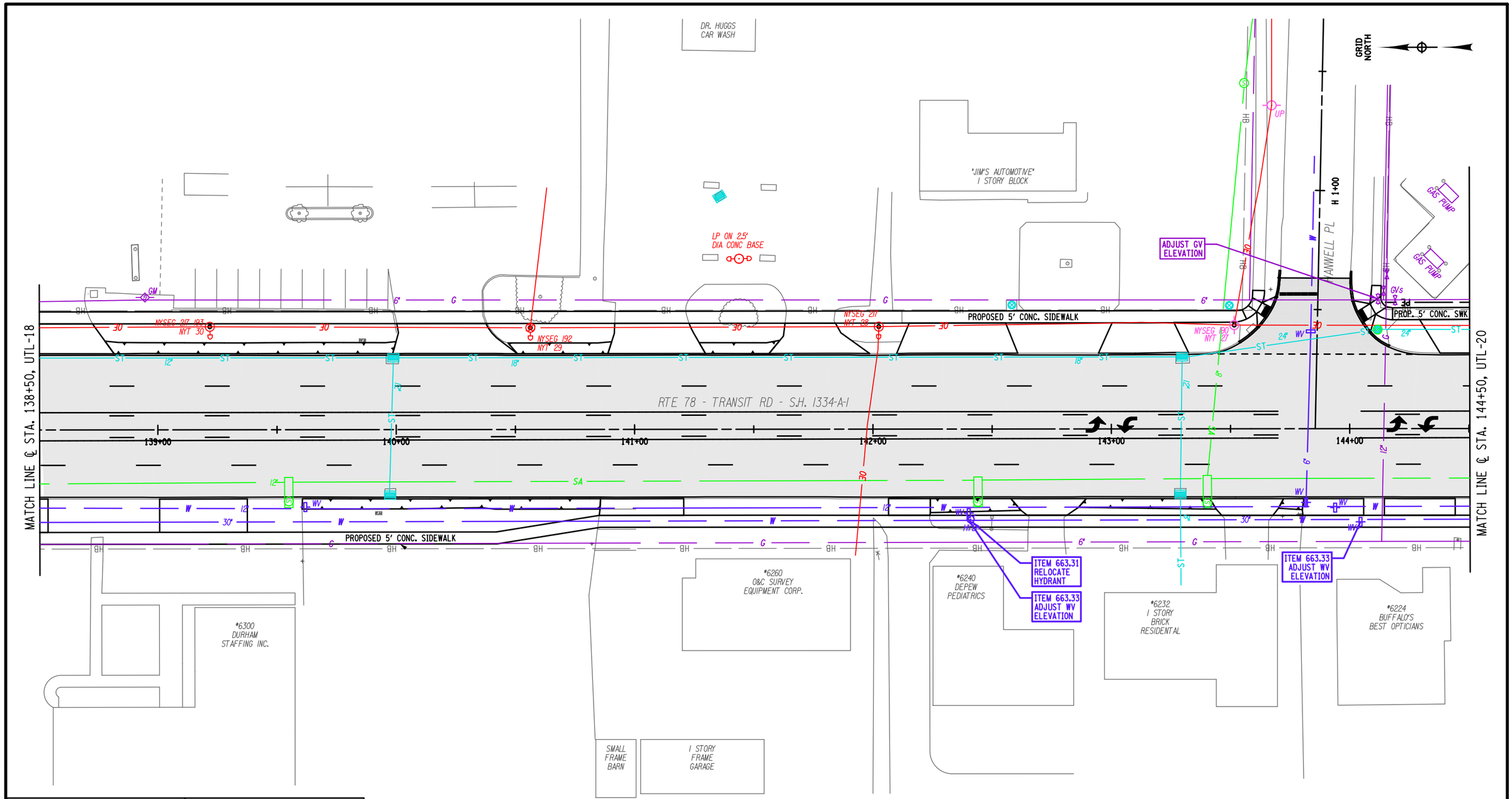

20 0 20 40 60 80'

1" = 40'

ITEM SUMMARY:

ITEM 663.31 - RELOCATE EXISTING HYDRANT (EA)
ITEM 663.33 - ADJUST EXISTING VALVE BOX ELEVATION (EA)

AFFIX SEAL: ON:	ALTERED BY: ON:
D264571 STATE OF NEW YORK ROBERT F. SCHALLER LICENSED PROFESSIONAL ENGINEER NO. 082465	

AS-BUILT REVISIONS
DESCRIPTION OF ALTERATIONS:

NY 78, TRANSIT ROAD, S.H. 1334A-1
FRENCH ROAD TO WEHRLE DRIVE
TOWNS OF CHEEKTOWAGA & LANCASTER
VILLAGE OF DEPEW
COUNTY: ERIE REGION: 05

PIN 5813.61
NY 78
UTILITY QUALITY LEVEL D

BRIDGES

CULVERTS

ALL DIMENSIONS IN ft UNLESS OTHERWISE NOTED

UTILITY PLANS
STA. 135+50 TO STA. 144+50

CONTRACT NUMBER
D264571

DRAWING NO. UTL-19
SHEET NO. 297

IT IS A VIOLATION OF LAW FOR ANY PERSON, UNLESS THEY ARE ACTING UNDER THE DIRECTION OF A LICENSED PROFESSIONAL ENGINEER, ARCHITECT, LANDSCAPE ARCHITECT, OR LAND SURVEYOR, TO ALTER AN ITEM IN ANY WAY. IF AN ITEM BEARING THE STAMP OF A LICENSED PROFESSIONAL IS ALTERED, THE ALTERING ENGINEER, ARCHITECT, LANDSCAPE ARCHITECT, OR LAND SURVEYOR SHALL STAMP THE DOCUMENT AND INCLUDE THE NOTATION "ALTERED BY" FOLLOWED BY THEIR SIGNATURE, THE DATE OF SUCH ALTERATION, AND A SPECIFIC DESCRIPTION OF THE ALTERATION.

NEW YORK STATE OF OPPORTUNITY. Department of Transportation

PROJECT MANAGER S. S. VAIDYA
CHECK R. F. SCHALLER
DRAFTING C. L. CRITES
CHECK R. F. SCHALLER
DESIGN C. L. CRITES
JOB MANAGER R. F. SCHALLER
DESIGN SUPERVISOR S. S. VAIDYA

FILE NAME = 581361_CPH_HWY_UTL-19.dgn
DATE/TIME = 22-JUN-2021 12:48
USER = cc1tes

PROJECT MANAGER S. S. VAIDYA
CHECK R. F. SCHALLER
DRAFTING C. L. CRITES
CHECK R. F. SCHALLER
DESIGN C. L. CRITES
JOB MANAGER R. F. SCHALLER
DESIGN SUPERVISOR S. S. VAIDYA

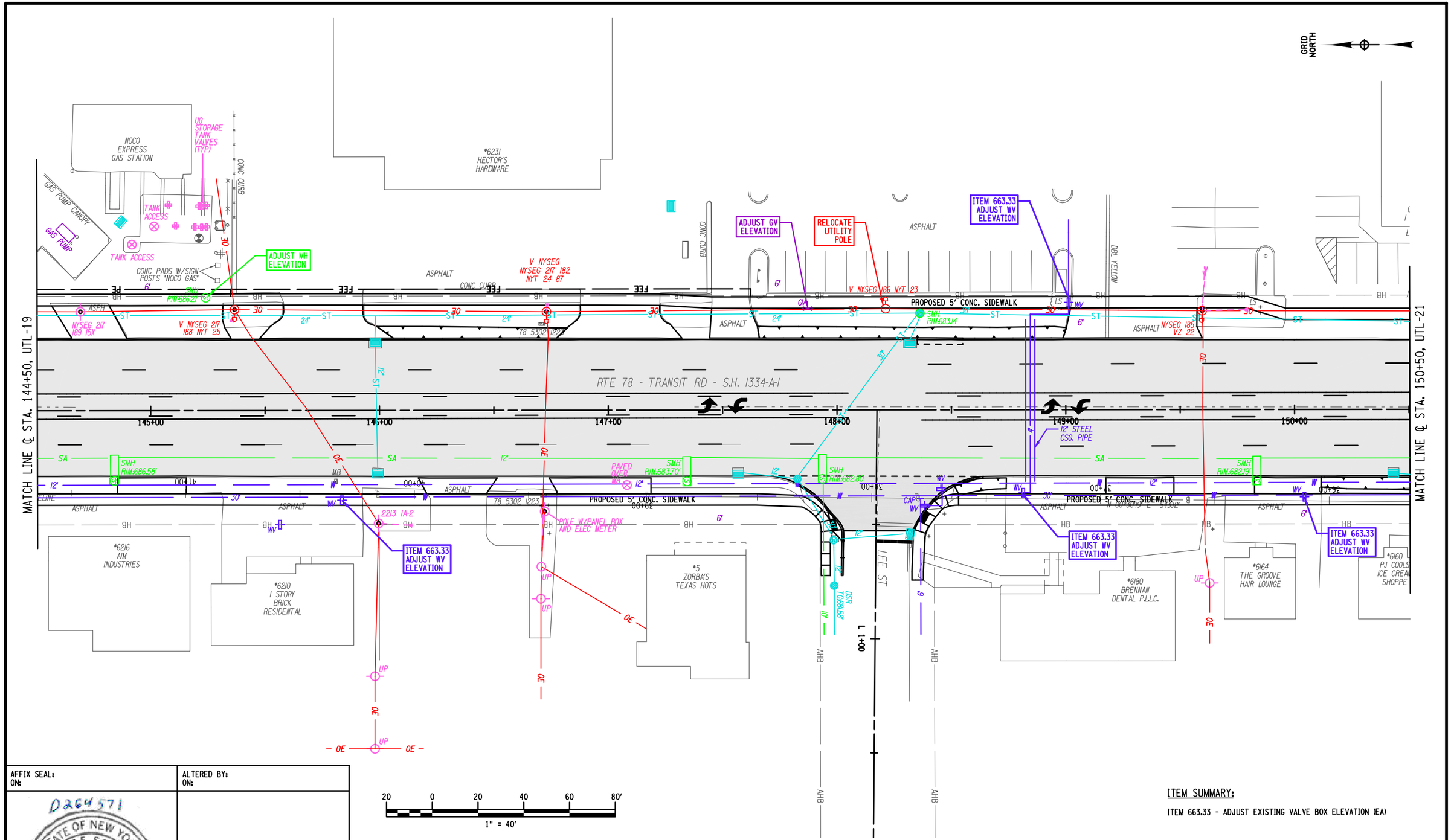

ITEM SUMMARY:

ITEM 663.33 - ADJUST EXISTING VALVE BOX ELEVATION (EA)

AFFIX SEAL:
ON:

ALTERED BY:
ON:

D264571

STATE OF NEW YORK
ROBERT F. SCHALLER
NO. 082465
LICENSED PROFESSIONAL ENGINEER

AS-BUILT REVISIONS
DESCRIPTION OF ALTERATIONS:

NY 78, TRANSIT ROAD, S.H. 1334A-1	PIN 5813.61	BRIDGES	CULVERTS	ALL DIMENSIONS IN ft UNLESS OTHERWISE NOTED
FRENCH ROAD TO WEHRLE DRIVE	NY 78			UTILITY PLANS
TOWNS OF CHEEKTOWAGA & LANCASTER	UTILITY QUALITY LEVEL D			STA. 144+50 TO STA. 150+50
VILLAGE OF DEPEW				
COUNTY: ERIE REGION: 05				

CONTRACT NUMBER
D264571

DRAWING NO. UTL-20
SHEET NO. 298

IT IS A VIOLATION OF LAW FOR ANY PERSON, UNLESS THEY ARE ACTING UNDER THE DIRECTION OF A LICENSED PROFESSIONAL ENGINEER, ARCHITECT, LANDSCAPE ARCHITECT, OR LAND SURVEYOR, TO ALTER AN ITEM IN ANY WAY. IF AN ITEM BEARING THE STAMP OF A LICENSED PROFESSIONAL IS ALTERED, THE ALTERING ENGINEER, ARCHITECT, LANDSCAPE ARCHITECT, OR LAND SURVEYOR SHALL STAMP THE DOCUMENT AND INCLUDE THE NOTATION "ALTERED BY" FOLLOWED BY THEIR SIGNATURE, THE DATE OF SUCH ALTERATION, AND A SPECIFIC DESCRIPTION OF THE ALTERATION.

NEW YORK STATE OF OPPORTUNITY. Department of Transportation

FILE NAME = 581361_CPH_HWY_UTL-20.dgn
DATE/TIME = 22-JUN-2021 12:48
USER = cc-rtes

PROJECT MANAGER S. S. VAIDYA
CHECK R. F. SCHALLER
DRAFTING C. L. CRITES
CHECK R. F. SCHALLER
DESIGN C. L. CRITES
JOB MANAGER R. F. SCHALLER
DESIGN SUPERVISOR S. S. VAIDYA

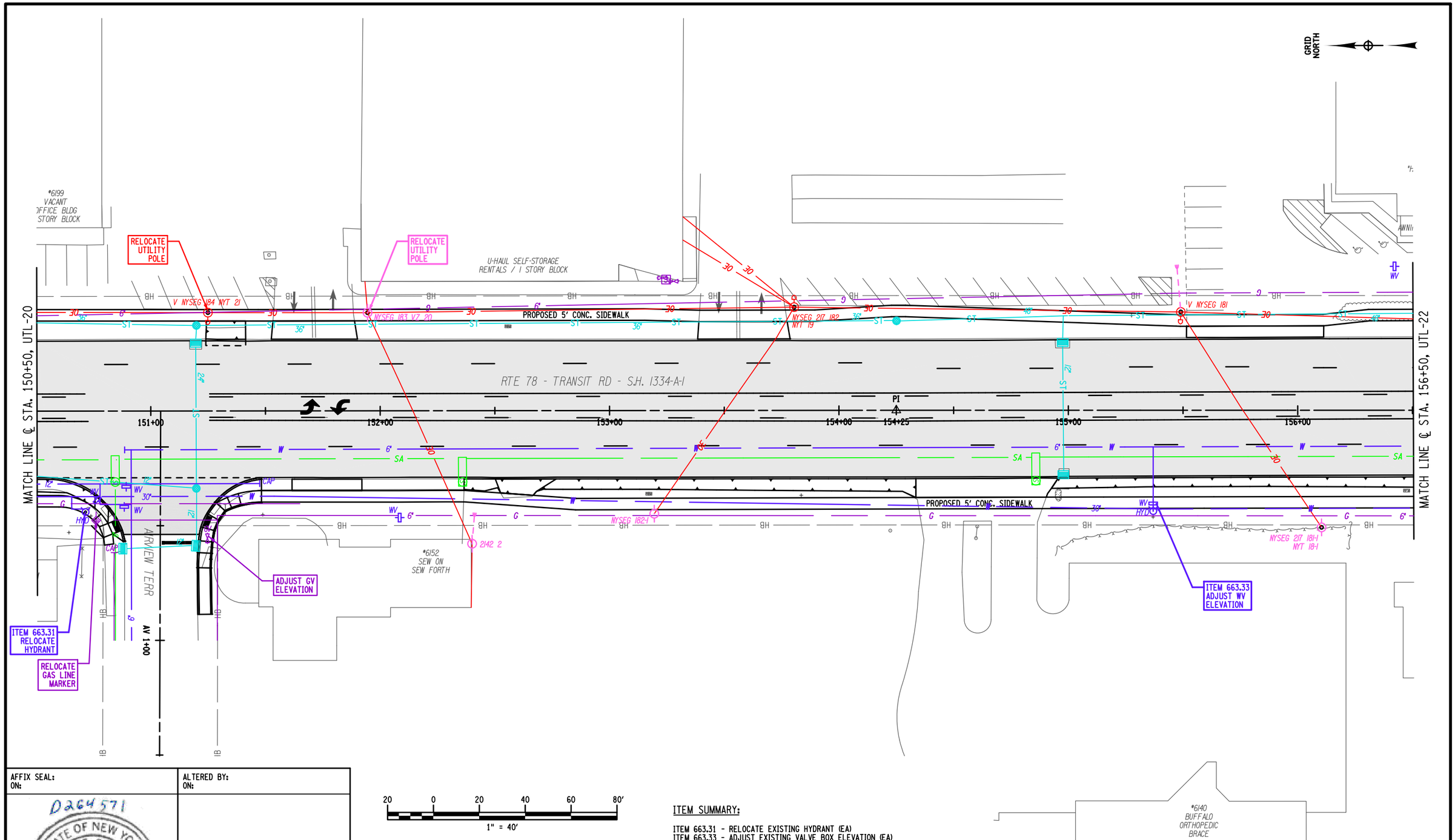

AFFIX SEAL: ON:	ALTERED BY: ON:
D264571 STATE OF NEW YORK ROBERT F. SCHALLER LICENSED PROFESSIONAL ENGINEER NO. 082465	

20 0 20 40 60 80'
1" = 40'

ITEM SUMMARY:

ITEM 663.31 - RELOCATE EXISTING HYDRANT (EA)
ITEM 663.33 - ADJUST EXISTING VALVE BOX ELEVATION (EA)

AS-BUILT REVISIONS DESCRIPTION OF ALTERATIONS:	NY 78, TRANSIT ROAD, S.H. 1334A-1	PIN 5813.61	BRIDGES	CULVERTS	ALL DIMENSIONS IN ft UNLESS OTHERWISE NOTED	CONTRACT NUMBER
	FRENCH ROAD TO WEHRLE DRIVE	NY 78			UTILITY PLANS STA. 150+50 TO STA. 156+50	D264571
	TOWNS OF CHEEKTOWAGA & LANCASTER	UTILITY QUALITY LEVEL D				DRAWING NO. UTL-21
	VILLAGE OF DEPEW					SHEET NO. 299
	COUNTY: ERIE REGION: 05					

IT IS A VIOLATION OF LAW FOR ANY PERSON, UNLESS THEY ARE ACTING UNDER THE DIRECTION OF A LICENSED PROFESSIONAL ENGINEER, ARCHITECT, LANDSCAPE ARCHITECT, OR LAND SURVEYOR, TO ALTER AN ITEM IN ANY WAY. IF AN ITEM BEARING THE STAMP OF A LICENSED PROFESSIONAL IS ALTERED, THE ALTERING ENGINEER, ARCHITECT, LANDSCAPE ARCHITECT, OR LAND SURVEYOR SHALL STAMP THE DOCUMENT AND INCLUDE THE NOTATION "ALTERED BY" FOLLOWED BY THEIR SIGNATURE, THE DATE OF SUCH ALTERATION, AND A SPECIFIC DESCRIPTION OF THE ALTERATION.

NEW YORK STATE OF OPPORTUNITY. Department of Transportation

FILE NAME = 581361_CPH_HWY_UTL-21.dgn
DATE/TIME = 22-JUN-2021 12:48
USER = corites

PROJECT MANAGER S. S. VAIDYA
CHECK R. F. SCHALLER
DRAFTING C. L. CRITES
CHECK R. F. SCHALLER
DESIGN C. L. CRITES
JOB MANAGER R. F. SCHALLER
DESIGN SUPERVISOR S. S. VAIDYA

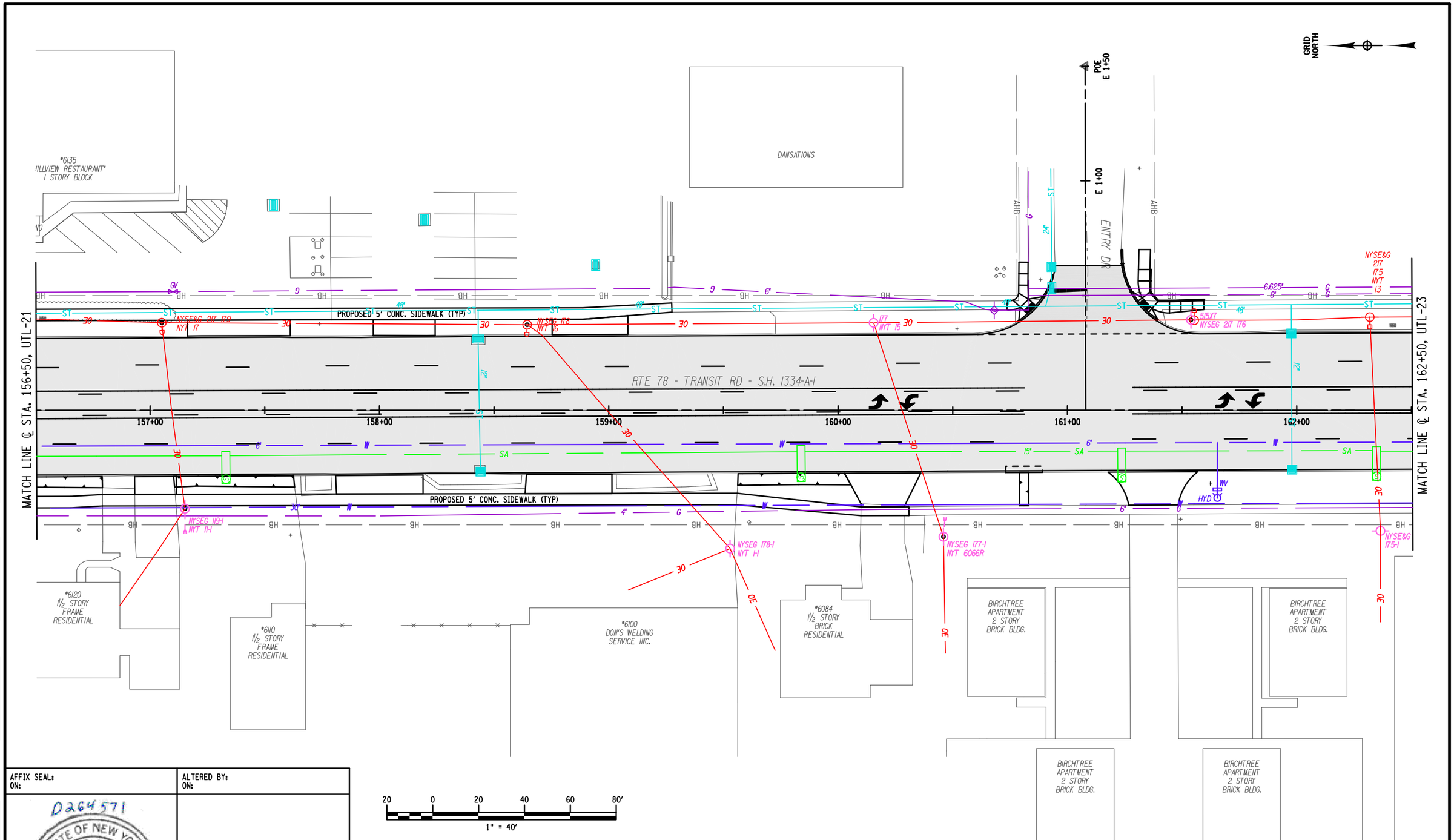

AFFIX SEAL:
ON:

ALTERED BY:
ON:

D264571

STATE OF NEW YORK
ROBERT F. SCHALLER
NO. 082465
LICENSED PROFESSIONAL ENGINEER

AS-BUILT REVISIONS
DESCRIPTION OF ALTERATIONS:

NY 78, TRANSIT ROAD, S.H. 1334A-1
FRENCH ROAD TO WEHRLE DRIVE
TOWNS OF CHEEKTOWAGA & LANCASTER
VILLAGE OF DEPEW
COUNTY: ERIE REGION: 05

PIN 5813.61
NY 78
UTILITY QUALITY LEVEL D

BRIDGES

CULVERTS

ALL DIMENSIONS IN ft UNLESS OTHERWISE NOTED

UTILITY PLANS
STA. 156+50 TO STA. 162+50

CONTRACT NUMBER
D264571

DRAWING NO. UTL-22
SHEET NO. 300

IT IS A VIOLATION OF LAW FOR ANY PERSON, UNLESS THEY ARE ACTING UNDER THE DIRECTION OF A LICENSED PROFESSIONAL ENGINEER, ARCHITECT, LANDSCAPE ARCHITECT, OR LAND SURVEYOR, TO ALTER AN ITEM IN ANY WAY. IF AN ITEM BEARING THE STAMP OF A LICENSED PROFESSIONAL IS ALTERED, THE ALTERING ENGINEER, ARCHITECT, LANDSCAPE ARCHITECT, OR LAND SURVEYOR SHALL STAMP THE DOCUMENT AND INCLUDE THE NOTATION "ALTERED BY" FOLLOWED BY THEIR SIGNATURE, THE DATE OF SUCH ALTERATION, AND A SPECIFIC DESCRIPTION OF THE ALTERATION.

NEW YORK STATE OF OPPORTUNITY. Department of Transportation

FILE NAME = 581361_CPH_HWY_UTL-22.dgn
DATE/TIME = 22-JUN-2021 12:48
USER = ccrites

PROJECT MANAGER S. S. VAIDYA
CHECK R. F. SCHALLER
DRAFTING C. L. CRITES
CHECK R. F. SCHALLER
DESIGN C. L. CRITES
JOB MANAGER R. F. SCHALLER
DESIGN SUPERVISOR S. S. VAIDYA

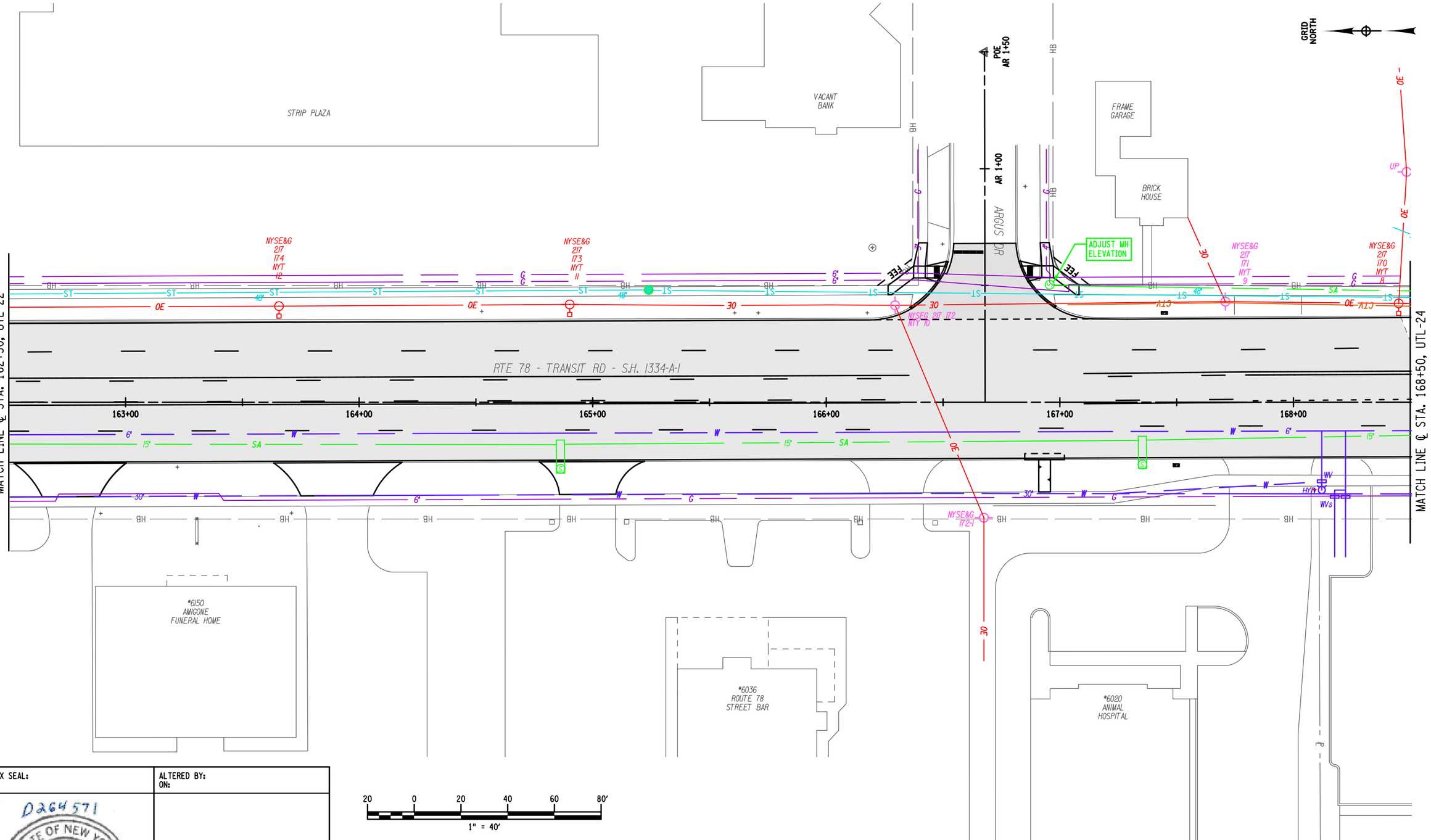

AFFIX SEAL:
ON:

ALTERED BY:
ON:

D264571

STATE OF NEW YORK
ROBERT F. SCHALLER
NO. 082465
LICENSED PROFESSIONAL ENGINEER

AS-BUILT REVISIONS
DESCRIPTION OF ALTERATIONS:

NY 78, TRANSIT ROAD, S.H. 1334A-1
FRENCH ROAD TO WEHRLE DRIVE
TOWNS OF CHEEKTOWAGA & LANCASTER
VILLAGE OF DEPEW
COUNTY: ERIE REGION: 05

PIN 5813.61
NY 78
UTILITY QUALITY LEVEL D

BRIDGES

CULVERTS

ALL DIMENSIONS IN ft UNLESS OTHERWISE NOTED

UTILITY PLANS
STA. 162+50 TO STA. 168+50

CONTRACT NUMBER
D264571

DRAWING NO. UTL-23
SHEET NO. 301

IT IS A VIOLATION OF LAW FOR ANY PERSON, UNLESS THEY ARE ACTING UNDER THE DIRECTION OF A LICENSED PROFESSIONAL ENGINEER, ARCHITECT, LANDSCAPE ARCHITECT, OR LAND SURVEYOR, TO ALTER AN ITEM IN ANY WAY. IF AN ITEM BEARING THE STAMP OF A LICENSED PROFESSIONAL IS ALTERED, THE ALTERING ENGINEER, ARCHITECT, LANDSCAPE ARCHITECT, OR LAND SURVEYOR SHALL STAMP THE DOCUMENT AND INCLUDE THE NOTATION "ALTERED BY" FOLLOWED BY THEIR SIGNATURE, THE DATE OF SUCH ALTERATION, AND A SPECIFIC DESCRIPTION OF THE ALTERATION.

NEW YORK STATE OF OPPORTUNITY. Department of Transportation

FILE NAME = 581361_CPH_HWY_UTL-23.dgn
DATE/TIME = 22-JUN-2021 12:49
USER = cortes

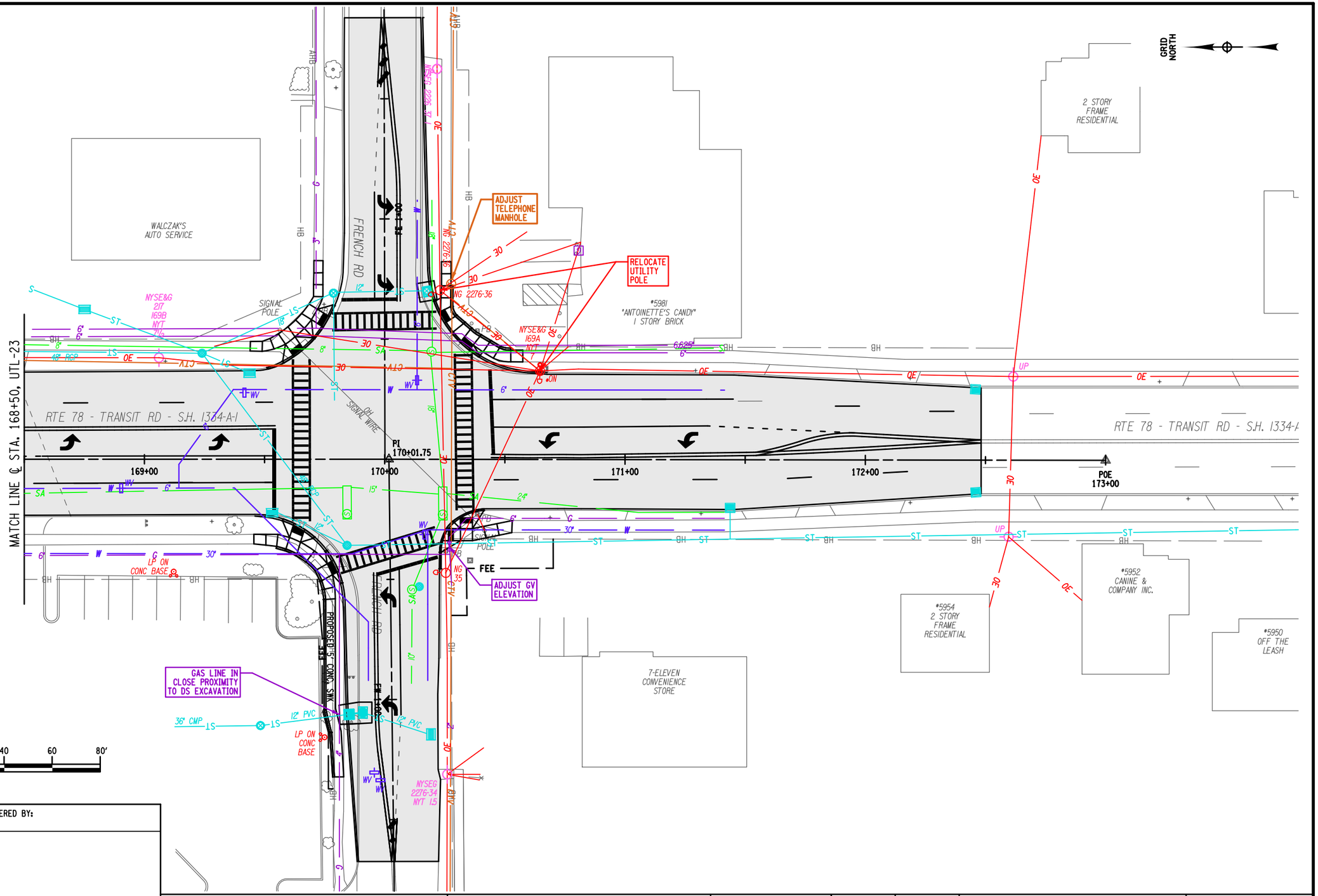

PROJECT MANAGER S. S. VAIDYA
CHECK R. F. SCHALLER
DRAFTING C. L. CRITES
DESIGN C. L. CRITES
JOB MANAGER R. F. SCHALLER
DESIGN SUPERVISOR S. S. VAIDYA

FILE NAME = 581361_CPH_HWY_UTL-24.dgn
DATE/TIME = 22-JUN-2021 12:49
USER = corites

AFFIX SEAL:
ON:

ALTERED BY:
ON:

D264571

STATE OF NEW YORK
ROBERT F. SCHALLER
NO. 082465
LICENSED PROFESSIONAL ENGINEER

AS-BUILT REVISIONS
DESCRIPTION OF ALTERATIONS:

NY 78, TRANSIT ROAD, S.H. 1334A-1
FRENCH ROAD TO WEHRLE DRIVE
TOWNS OF CHEEKTOWAGA & LANCASTER
VILLAGE OF DEPEW
COUNTY: ERIE REGION: 05

PIN 5813.61
NY 78
UTILITY QUALITY LEVEL D

BRIDGES

CULVERTS

ALL DIMENSIONS IN ft UNLESS OTHERWISE NOTED

UTILITY PLANS
STA. 168+50 TO STA. 174+50

CONTRACT NUMBER
D264571

DRAWING NO. UTL-24
SHEET NO. 302

IT IS A VIOLATION OF LAW FOR ANY PERSON, UNLESS THEY ARE ACTING UNDER THE DIRECTION OF A LICENSED PROFESSIONAL ENGINEER, ARCHITECT, LANDSCAPE ARCHITECT, OR LAND SURVEYOR, TO ALTER AN ITEM IN ANY WAY. IF AN ITEM BEARING THE STAMP OF A LICENSED PROFESSIONAL IS ALTERED, THE ALTERING ENGINEER, ARCHITECT, LANDSCAPE ARCHITECT, OR LAND SURVEYOR SHALL STAMP THE DOCUMENT AND INCLUDE THE NOTATION "ALTERED BY" FOLLOWED BY THEIR SIGNATURE, THE DATE OF SUCH ALTERATION, AND A SPECIFIC DESCRIPTION OF THE ALTERATION.

NEW YORK STATE OF OPPORTUNITY. Department of Transportation

PROJECT MANAGER S. S. VAIDYA
CHECK R. F. SCHALLER
DRAFTING C. L. CRITES
CHECK R. F. SCHALLER
DESIGN C. L. CRITES
JOB MANAGER R. F. SCHALLER
DESIGN SUPERVISOR S. S. VAIDYA

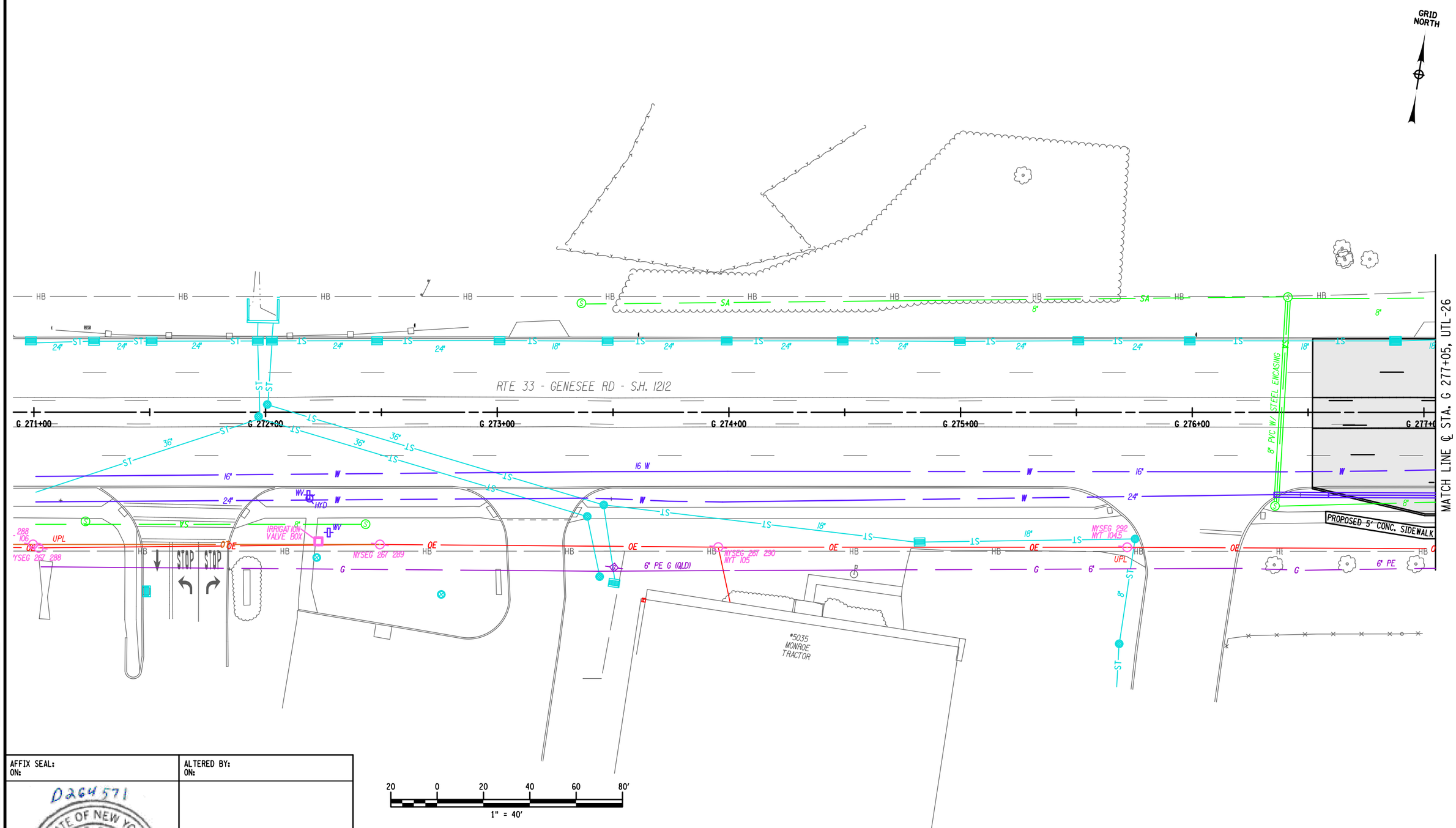

AFFIX SEAL: ON:	ALTERED BY: ON:
D264571 STATE OF NEW YORK ROBERT F. SCHALLER NO. 082465 LICENSED PROFESSIONAL ENGINEER	

AS-BUILT REVISIONS
DESCRIPTION OF ALTERATIONS:

NY 78, TRANSIT ROAD, S.H. 1334A-1
FRENCH ROAD TO WEHRLE DRIVE
TOWNS OF CHEEKTOWAGA & LANCASTER
VILLAGE OF DEPEW
COUNTY: ERIE REGION: 05

PIN 5813.61
NY 78
UTILITY QUALITY LEVEL D

BRIDGES

CULVERTS

ALL DIMENSIONS IN ft UNLESS OTHERWISE NOTED

UTILITY PLANS
STA. G 270+91 TO STA. G 277+05

CONTRACT NUMBER
D264571

DRAWING NO. UTL-25
SHEET NO. 303

IT IS A VIOLATION OF LAW FOR ANY PERSON, UNLESS THEY ARE ACTING UNDER THE DIRECTION OF A LICENSED PROFESSIONAL ENGINEER, ARCHITECT, LANDSCAPE ARCHITECT, OR LAND SURVEYOR, TO ALTER AN ITEM IN ANY WAY. IF AN ITEM BEARING THE STAMP OF A LICENSED PROFESSIONAL IS ALTERED, THE ALTERING ENGINEER, ARCHITECT, LANDSCAPE ARCHITECT, OR LAND SURVEYOR SHALL STAMP THE DOCUMENT AND INCLUDE THE NOTATION "ALTERED BY" FOLLOWED BY THEIR SIGNATURE, THE DATE OF SUCH ALTERATION, AND A SPECIFIC DESCRIPTION OF THE ALTERATION.

NEW YORK STATE OF OPPORTUNITY. Department of Transportation

FILE NAME = 581361_CPH_HWY_UTL-25.dgn
DATE/TIME = 22-JUN-2021 12:49
USER = corites

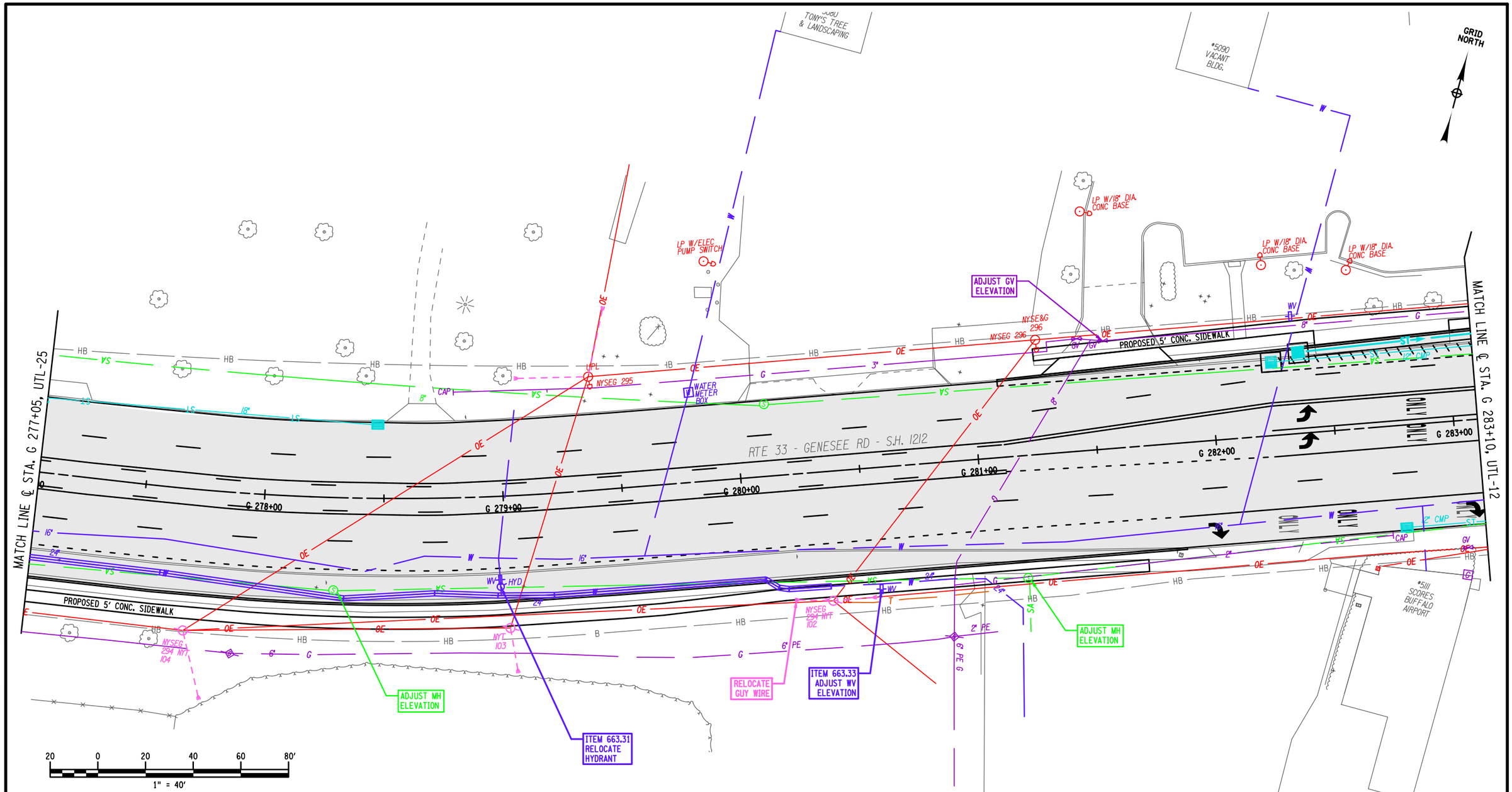

AFFIX SEAL:
ON:

ALTERED BY:
ON:

D264571

STATE OF NEW YORK
ROBERT F. SCHALLER
NO. 082465
LICENSED PROFESSIONAL ENGINEER

ITEM SUMMARY:

ITEM 663.31 - RELOCATE EXISTING HYDRANT (EA)
ITEM 663.33 - ADJUST EXISTING VALVE BOX ELEVATION (EA)

AS-BUILT REVISIONS
DESCRIPTION OF ALTERATIONS:

NY 78, TRANSIT ROAD, S.H. 1334A-1
FRENCH ROAD TO WEHRLE DRIVE
TOWNS OF CHEEKTOWAGA & LANCASTER
VILLAGE OF DEPEW
COUNTY: ERIE REGION: 05

PIN 5813.61
NY 78
UTILITY QUALITY LEVEL D

BRIDGES

CULVERTS

ALL DIMENSIONS IN ft UNLESS OTHERWISE NOTED

UTILITY PLANS
STA. G 277+05 TO STA. G 283+10

CONTRACT NUMBER
D264571

DRAWING NO. UTL-26
SHEET NO. 304

IT IS A VIOLATION OF LAW FOR ANY PERSON, UNLESS THEY ARE ACTING UNDER THE DIRECTION OF A LICENSED PROFESSIONAL ENGINEER, ARCHITECT, LANDSCAPE ARCHITECT, OR LAND SURVEYOR, TO ALTER AN ITEM IN ANY WAY. IF AN ITEM BEARING THE STAMP OF A LICENSED PROFESSIONAL IS ALTERED, THE ALTERING ENGINEER, ARCHITECT, LANDSCAPE ARCHITECT, OR LAND SURVEYOR SHALL STAMP THE DOCUMENT AND INCLUDE THE NOTATION "ALTERED BY" FOLLOWED BY THEIR SIGNATURE, THE DATE OF SUCH ALTERATION, AND A SPECIFIC DESCRIPTION OF THE ALTERATION.

NEW YORK STATE OF OPPORTUNITY. Department of Transportation

DESIGN SUPERVISOR S. S. VAIDYA JOB MANAGER R. F. SCHALLER DESIGN C. L. CRITES CHECK R. F. SCHALLER DRAFTING C. L. CRITES CHECK R. F. SCHALLER PROJECT MANAGER S. S. VAIDYA

FILE NAME = 581361_CPH_HWY_UTL-26.dgn
DATE/TIME = 22-JUN-2021 12:49
USER = cortes

PROJECT MANAGER S. S. VAIDYA
CHECK R. F. SCHALLER
DRAFTING C. L. CRITES
CHECK R. F. SCHALLER
DESIGN C. L. CRITES
JOB MANAGER R. F. SCHALLER
DESIGN SUPERVISOR S. S. VAIDYA

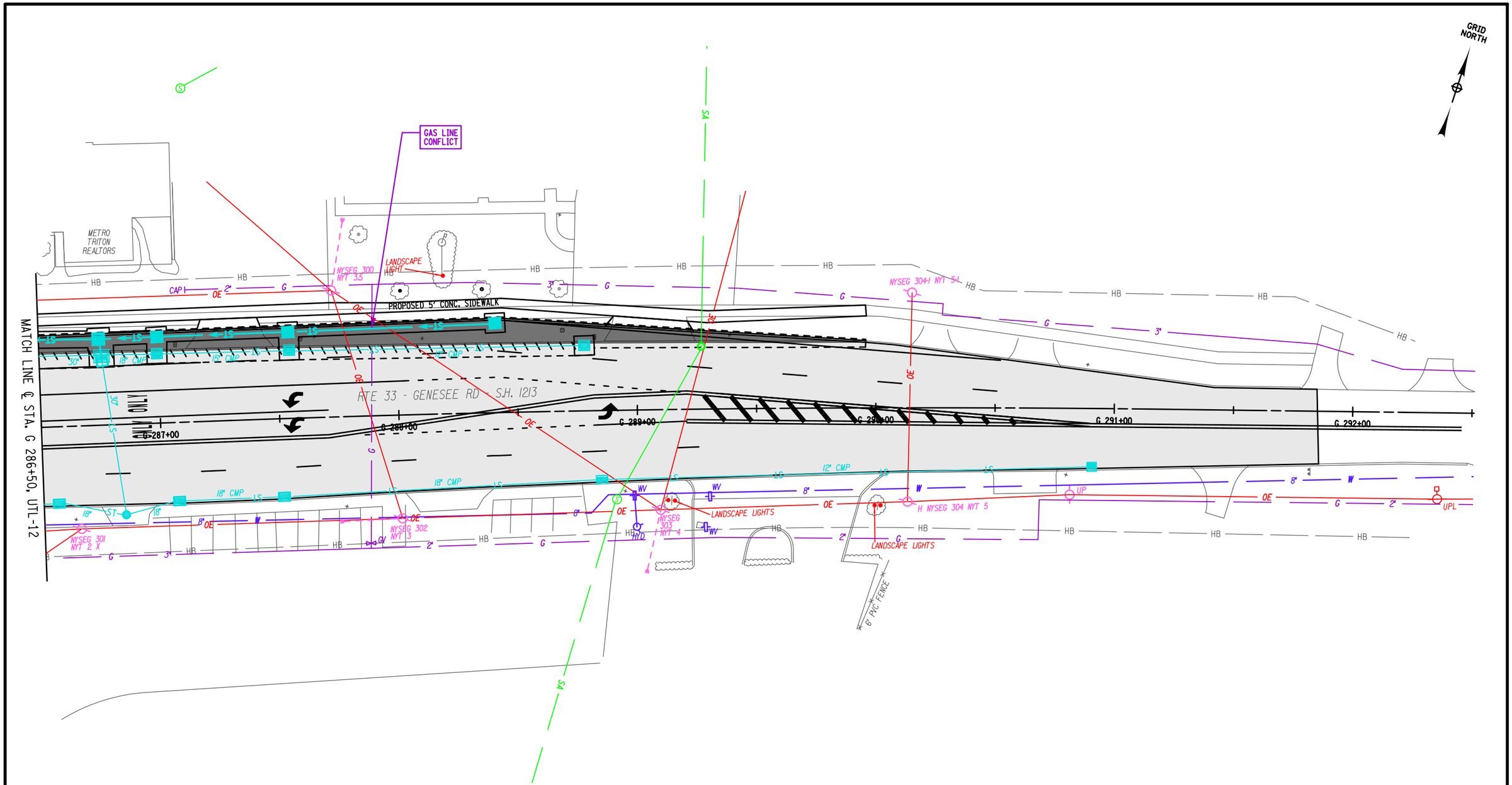

20 0 20 40 60 80'
1" = 40'

AFFIX SEAL: ON:	ALTERED BY: ON:
D264571 STATE OF NEW YORK ROBERT F. SCHALLER NO. 082465 LICENSED PROFESSIONAL ENGINEER	

AS-BUILT REVISIONS
DESCRIPTION OF ALTERATIONS:

NY 78, TRANSIT ROAD, S.H. 1334A-1
FRENCH ROAD TO WEHRLE DRIVE
TOWNS OF CHEEKTOWAGA & LANCASTER
VILLAGE OF DEPEW
COUNTY: ERIE REGION: 05

PIN 5813.61
NY 78
UTILITY QUALITY LEVEL D

BRIDGES

CULVERTS

ALL DIMENSIONS IN ft UNLESS OTHERWISE NOTED

UTILITY PLANS
STA. G 286+50 TO STA. G 291+85

CONTRACT NUMBER
D264571

DRAWING NO. UTL-27
SHEET NO. 305

IT IS A VIOLATION OF LAW FOR ANY PERSON, UNLESS THEY ARE ACTING UNDER THE DIRECTION OF A LICENSED PROFESSIONAL ENGINEER, ARCHITECT, LANDSCAPE ARCHITECT, OR LAND SURVEYOR, TO ALTER AN ITEM IN ANY WAY. IF AN ITEM BEARING THE STAMP OF A LICENSED PROFESSIONAL IS ALTERED, THE ALTERING ENGINEER, ARCHITECT, LANDSCAPE ARCHITECT, OR LAND SURVEYOR SHALL STAMP THE DOCUMENT AND INCLUDE THE NOTATION "ALTERED BY" FOLLOWED BY THEIR SIGNATURE, THE DATE OF SUCH ALTERATION, AND A SPECIFIC DESCRIPTION OF THE ALTERATION.

NEW YORK STATE OF OPPORTUNITY. Department of Transportation

FILE NAME = 581361_CPH_HWY_UTL-27.dgn
DATE/TIME = 22-JUN-2021 12:49
USER = ccrites

WATER LINE GENERAL NOTES

1. ALL ELEVATIONS REFER TO USGS NA VD83 DATUM.
2. THE CONTRACTOR SHALL OBTAIN ALL NECESSARY PERMITS AND FURNISH COPIES TO THE ENGINEER PRIOR TO COMMENCING WORK.
3. THE CONTRACTORS WORK AREA SHALL BE CONFINED TO THE LIMITS OF THE RIGHT-OF-WAYS AND EASEMENTS. THE CONTRACTOR SHALL OBTAIN ANY ADDITIONAL EASEMENTS OR WORK RELEASES SHOULD THE CONTRACTOR REQUIRE ADDITIONAL AREA TO ACCOMMODATE HIS OPERATIONS.
4. THE CONTRACTOR SHALL PROVIDE MAINTENANCE AND PROTECTION OF TRAFFIC IN ACCORDANCE WITH THE ERIE COUNTY HIGHWAY DEPARTMENT STANDARDS AND THE NYSDOT MANUAL OF UNIFORM TRAFFIC CONTROL DEVICES.
5. THE LOCATIONS AND DEPTHS OF EXISTING UNDERGROUND UTILITIES AS SHOWN ON THE PLANS AND PROFILES ARE APPROXIMATE. OTHER UNDERGROUND UTILITIES NOT SHOWN MAY BE ENCOUNTERED. THE CONTRACTOR SHALL PERFORM TEST PITS TO VERIFY THE LOCATION AND ELEVATION OF UTILITIES AT INTERCONNECTIONS AND CROSSINGS AS SHOWN, DIRECTED OR REQUIRED. THE CONTRACTOR SHALL EXCAVATE IN ADVANCE OF THE PIPE LAYING OPERATION AND EXPOSE ALL EXISTING UNDERGROUND UTILITIES TO PREVENT DAMAGE DURING CONSTRUCTION AND TO DETERMINE REQUIRED CHANGES IN GRADE NECESSARY TO INSTALL THE WATERMAIN TO AVOID CONFLICTS.
6. THE CONTRACTOR SHALL INSTALL THOSE MEASURES REQUIRED TO LIMIT EROSION OF AREAS DISTURBED BY THE WORK. CLEARING SHALL BE PERFORMED ON AN AS NEEDED BASIS, PHASED TO REDUCE EROSION POTENTIAL AND VISUAL IMPACT
7. BLASTING WILL NOT BE PERMITTED.
8. NO MORE THAN ONE CONNECTION MAY BE MADE TO ANY EXISTING WATERMAIN PRIOR TO TESTING, DISINFECTION, AND APPROVAL OF THE WATERLINE INSTALLATION COMPLETED WORKS APPROVAL REPORT(S) BY THE ERIE COUNTY WATER AUTHORITY AND THE ERIE COUNTY HEALTH DEPARTMENT.
9. THE ERIE COUNTY WATER AUTHORITY ONLY SHALL OPERATE EXISTING VALVES AND FIRE HYDRANTS, INCLUDING NEWLY INSTALLED VALVES AND FIRE HYDRANTS THAT HAVE BEEN PLACED INTO SERVICE. THE CONTRACTOR IS ADVISED THAT WATERTIGHT CONDITIONS MAY NOT EXIST WHEN EXISTING VALVES ARE CLOSED.
10. THE CONTRACTOR SHALL HAVE ALL EQUIPMENT, MANPOWER, AND MATERIALS REQUIRED ON SITE AND READY FOR USE PRIOR TO COMMENCING ANY SHUT-DOWN OR REMOVING ANY EXISTING FACILITIES FROM SERVICE. THE CONTRACTOR SHALL NOTIFY ALL AFFECTED CUSTOMERS OF ANY SHUT27/64DOWN AT LEAST 48 HOURS IN ADVANCE. THE CONTRACTOR SHALL NOTIFY THE APPROPRIATE FIRE STATIONS 48 HOURS IN ADVANCE PRIOR TO TAKING ANY FIRE HYDRANTS OUT OF SERVICE. ANY FIRE HYDRANTS NOT IN SERVICE SHALL BE BAGGED IN BURLAP OR PLASTIC. ANY SHUT-DOWN SHALL BE LIMITED TO 4 CONSECUTIVE HOURS. IT MAY BE NECESSARY TO SCHEDULE SHUT-DOWNS AT NIGHT, WEEKENDS, OR OTHER OFF HOURS SO AS TO NOT AFFECT SCHOOLS, BUSINESSES OR OTHER CUSTOMERS, AS DETERMINED BY THE ENGINEER. SHUT-DOWN REQUESTS SHALL BE SUBMITTED TO THE ERIE COUNTY WATER AUTHORITY A MINIMUM OF3 BUSINESS DAYS IN ADVANCE OF THE REQUESTED SHUT-DOWN DATE.
11. ALL WATERMAIN PIPING SHALL BE INSTALLED WITH A MINIMUM OF 5'-0" OF COVER.
12. ALL WATERMAIN PIPING SHALL BE INSTALLED WITH A MINIMUM OF 1 '-6" OF VERTICAL CLEARANCE AND 10'-0" OF HORIZONTAL CLEARANCE FROM SANITARY AND STORM PIPING, MEASURED FROM THE OUTSIDE OF THE PIPES AT THE POINT OF CROSSING.
13. IF THE MATERIAL AT THE DESIGN GRADE IS UNSUITABLE AS DETERMINED BY THE ENGINEER, THE CONTRACTOR, WHEN ORDERED IN WRITING, SHALL EXCAVATE ADDITIONAL MATERIAL TO THE DEPTH NECESSARY AND SHALL BACKFILL TO THE PROPOSED GRADE WITH SELECT GRANULAR MATERIAL.
14. THE INSTALLATION OF 90 DEGREE BENDS IN THE WATERMAIN IS NOT ALLOWED, UNLESS APPROVED BY THE ERIE COUNTY WATER AUTHORITY.
15. THRUST RESTRAINT FOR WATERMAIN PIPING THROUGH 12-INCH DIAMETER SHALL CONSIST OF THRUST BLOCKS AND PIPE JOINT RESTRAINT.
16. THE CONTRACTOR SHALL NOTIFY THE OWNER OF ANY UTILITY POLE IN ADVANCE OF ANY EXCAVATION WORK THAT WILL TAKE PLACE WITHIN 5'-0" OF THE UTILITY POLE. THE CONTRACTOR SHALL INCLUDE THE COST OF TEMPORARY POLE SUPPORT IN THE APPROPRIATE BID ITEM. WHERE UTILITY POLES ARE REQUIRED TO BE SUPPORTED DURING CONSTRUCTION, THE CONTRACTOR SHALL MAKE ALL NECESSARY ARRANGEMENTS WITH THE UTILITY COMPANY.
17. IF MATERIALS ARE ENCOUNTERED DURING THE CONSTRUCTION THAT ARE SUSPECTED OF BEING CONTAMINATED, THE CONTRACTOR SHALL IMMEDIATELY NOTIFY THE NYSDEC FOR DIRECTION REGARDING TESTING, SEPARATION, CONTAINMENT AND DISPOSAL PROCEDURES.
18. EXISTING FIRE HYDRANTS REMOVED DURING CONSTRUCTION AND NOT REINSTALLED AS PART OF THE WORK SHALL BE RETURNED TO THE ERIE COUNTY WATER AUTHORITY SERVICE CENTER, 3030 UNION ROAD, CHEEKTOWAGA.
19. THE CONTRACTOR SHALL COLD PATCH ALL TRENCH EXCAVATIONS IN TRAVELED AREAS INCLUDING ROADS, DRIVEWAYS, SIDEWALKS AND PARKING AREAS.
20. THE CONTRACTOR SHALL NOT RESTRICT SCHOOL BUS ACCESS.
21. THE USE OF EXISTING FIRE HYDRANTS FOR ANY REASON IS PROHIBITED WITHOUT PRIOR APPROVAL OF THE ERIE COUNTY WATER AUTHORITY. THIS INCLUDES NEWLY INSTALLED FIRE HYDRANTS THAT HAVE BEEN PLACED INTO SERVICE.
22. THE CONTRACTOR SHALL SUBMIT PROCEDURES FOR TESTING AND DISINFECTION OF THE WATERMAIN TO THE ENGINEER FOR APPROVAL.
23. THE CONTRACTOR SHALL BE PRESENT AND ASSIST IN THE FINAL WALK INSPECTION. THE CONTRACTOR SHALL PROVIDE SUFFICIENT PERSONNEL AND EQUIPMENT TO DEMONSTRATE TO THE ENGINEER THAT ALL VALVES, FIRE HYDRANTS AND CURB STOPS OPERATE AS REQUIRED.

ITEM 663.0603 - COPPER WATER SERVICE PIPE 3/4" (LF)

LOCATION	DIA.	START STATION +/-	OFFSET +/-	END STATION +/-	OFFSET +/-	LENGTH (LF)
24" WL RELOCATION	0.75 IN	101+29.1	46.3' RT	101+29.1	48.2' RT	2.0
8" WL RELOCATION	0.75 IN	102+91.2	50.7' RT	102+91.1	41.7' RT	9.0
	0.75 IN	102+91.1	41.7' RT	103+50.7	41.9' RT	59.5
					TOTAL LENGTH:	71.0 LF

ITEM 663.1208 - DOUBLE DISK GATE VALVE & VALVE BOX, 8" (EA)

LOCATION	DIA.	STATION +/-	OFFSET +/-	QTY (EA)
8" WL RELOCATION	8 IN	103+51.1	42.3' RT	1.0
8" WL RELOCATION	8 IN	103+71.8	42.4' RT	1.0
			TOTAL LENGTH:	2.0 EA

ITEM 663.2124 - WEDGE TYPE MECHANICAL RESTRAINT GLANDS, 24" (EA)

LOCATION	DIA.	STATION +/-	OFFSET +/-	QTY (EA)
24" WL RELOC	24 IN	100+38.3	55.4' RT	1.0
24" WL RELOC	24 IN	100+47.2	55.4' RT	1.0
24" WL RELOC	24 IN	100+56.9	45.6' RT	1.0
24" WL RELOC	24 IN	101+36.9	45.5' RT	1.0
24" WL RELOC	24 IN	101+56.5	41.7' RT	1.0
24" WL RELOC	24 IN	102+16.5	41.6' RT	1.0
			TOTAL LENGTH:	6.0 EA

ITEM 663.2503 - WATER SERVICE CONNECTION, 3/4" (EA)

LOCATION	DIA.	STATION +/-	OFFSET +/-	QTY (EA)
24" WL RELOCATION	24 IN	101+29.1	46.3' RT	1.0
8" WL RELOCATION	8 IN	102+91.2	50.7' RT	1.0
			TOTAL LENGTH:	2.0 EA

ITEM 663.4108 - REMOVE & DISPOSE OF EXISTING WATER MAIN, 8" (LF)

LOCATION	DIA.	START STATION +/-	OFFSET +/-	END STATION +/-	OFFSET +/-	LENGTH (LF)
8" WL RELOCATION	8 IN	102+11.3	36.4' RT	104+41.7	37.4' RT	231.0
					TOTAL LENGTH:	231.0 LF

ITEM 663.42 - REMOVE & DISPOSE OF EXISTING WATER VALVE & VALVE BOX (EA)

LOCATION	DIA.	STATION +/-	OFFSET +/-	QTY (EA)
8" WL RELOCATION	8 IN	102+11.3	36.4' RT	1.0
	8 IN	102+32.0	35.7' RT	1.0
			TOTAL LENGTH:	2.0 EA

ITEM 663.1808 - BOLTED SLEEVE TYPE COUPLING, 8" (EA)

LOCATION	DIA.	STATION +/-	OFFSET +/-	QTY (EA)
8" WL RELOCATION	8 IN	104+41.7	37.4' RT	1.0
			TOTAL LENGTH:	1.0 EA

ITEM 663.1824 - BOLTED SLEEVE TYPE COUPLING, 24" (EA)

LOCATION	DIA.	STATION +/-	OFFSET +/-	QTY (EA)
24" WL RELOCATION	24 IN	100+38.3	55.4' RT	1.0
			TOTAL LENGTH:	1.0 EA

ITEM 663.0108 - DUCTILE IRON CEMENT LINED WATER PIPE, 8" (LF)

LOCATION	DIA.	START STATION +/-	OFFSET +/-	END STATION +/-	OFFSET +/-	LENGTH (LF)
8" WL RELOCATION	8 IN	103+50.7	41.9' RT	104+27.9	42.2' RT	77.2
	8 IN	104+27.9	42.2' RT	104+39.7	37.4' RT	12.8
	8 IN	104+39.7	37.4' RT	104+41.7	37.4' RT	2.0
					TOTAL LENGTH:	92.0 LF

*EXTRA PIPE LENGTH DUE TO SKEWING HAS BEEN ACCOUNTED FOR IN THE LENGTH COLUMN.

ITEM 663.0108 - DUCTILE IRON CEMENT LINED WATER PIPE, 24" (LF)

LOCATION	DIA.	START STATION +/-	OFFSET +/-	END STATION +/-	OFFSET +/-	LENGTH (LF)
24" WL RELOCATION	24 IN	100+38.3	55.4' RT	100+47.2	55.4' RT	8.9
	24 IN	100+47.2	55.4' RT	100+56.9	45.6' RT	14.0
	24 IN	100+56.9	45.6' RT	101+36.9	45.5' RT	80.0
	24 IN	101+36.9	45.5' RT	101+56.5	41.7' RT	20.0
	24 IN	101+56.5	41.7' RT	102+16.5	41.6' RT	60.0
					TOTAL LENGTH:	183.0 LF

*EXTRA PIPE LENGTH DUE TO SKEWING HAS BEEN ACCOUNTED FOR IN THE LENGTH COLUMN.

AFFIX SEAL:
ON:

D264571
STATE OF NEW YORK
ROBERT F. SCHALLER
NO. 082465
LICENSED PROFESSIONAL ENGINEER

ALTERED BY:
ON:

AS-BUILT REVISIONS
DESCRIPTION OF ALTERATIONS:

NY 78, TRANSIT ROAD, S.H. 1334A-1
FRENCH ROAD TO WEHRLE DRIVE
TOWNS OF CHEEKTOWAGA & LANCASTER
VILLAGE OF DEPEW
COUNTY: ERIE REGION: 05

PIN 5813.61
NY 78
UTILITY QUALITY LEVEL D

BRIDGES
CULVERTS

ALL DIMENSIONS IN ft UNLESS OTHERWISE NOTED

WATERLINE NOTES & TABLES
SHEET 1 OF 2

CONTRACT NUMBER
D264571

DRAWING NO. WLNT-1
SHEET NO. 306

IT IS A VIOLATION OF LAW FOR ANY PERSON, UNLESS THEY ARE ACTING UNDER THE DIRECTION OF A LICENSED PROFESSIONAL ENGINEER, ARCHITECT, LANDSCAPE ARCHITECT, OR LAND SURVEYOR, TO ALTER AN ITEM IN ANY WAY. IF AN ITEM BEARING THE STAMP OF A LICENSED PROFESSIONAL IS ALTERED, THE ALTERING ENGINEER, ARCHITECT, LANDSCAPE ARCHITECT, OR LAND SURVEYOR SHALL STAMP THE DOCUMENT AND INCLUDE THE NOTATION "ALTERED BY" FOLLOWED BY THEIR SIGNATURE, THE DATE OF SUCH ALTERATION, AND A SPECIFIC DESCRIPTION OF THE ALTERATION.

NEW YORK STATE OF OPPORTUNITY. Department of Transportation

DESIGN SUPERVISOR S. S. VAIDYA
JOB MANAGER R. F. SCHALLER
DESIGN C. L. CRITES
CHECK R. F. SCHALLER
DRAFTING C. L. CRITES
CHECK R. F. SCHALLER
PROJECT MANAGER S. S. VAIDYA
FILE NAME = 581361_CPH_HWY_WLNT-1.dgn
DATE/TIME = 16-JUN-2021 09:24
USER = crites

ITEM 663.44 - REMOVE & DISPOSE OF EXISTING WATER SERVICE CONNECTION (EA)

LOCATION	DIA.	START STATION +/-	OFFSET +/-	END STATION +/-	OFFSET +/-	QTY (EA)
24" WL RELOCATION	24 IN	101+29.5	42.5' RT	101+29.5	47.5' RT	1.0
8" WL RELOCATION	8 IN	102+91.1	54.6' RT	102+91.2	50.7' RT	1.0
					TOTAL LENGTH:	2.0 EA

ITEM 663.2001 - IRON WATER MAIN FITTINGS (3" - 8") (LB)

POINT	SIZE	BEGIN STA +/-	OFFSET +/-	INV ELEV OF PIPE	LENGTH (FT)	SLOPE	FITTINGS	WEIGHT (LBS)	COMMENTS
8" WATERLINE RELOCATION									
1	8 IN	104+27.9	42.2' RT	692.17'					BEGIN PROP WATERLINE, BOLTED COUPLING TO EXIST (SEE ITEM 663.1808)
					11.8	0.00%			PIPE RUN
2	8 IN	104+39.7	37.4' RT	692.17'			22.5	110	22 - 1/2 DEG HORIZONTAL BEND TO GET TO OFFSET OF 42.2' RT
					2.0	0.00%			PIPE RUN
3	8 IN	104+41.7	37.4' RT	692.17'			22.5	110	22 - 1/2 DEG HORIZONTAL BEND TO STRAIGHTEN NEW RUN
							TOTAL WEIGHT:	220 LBS	

NOTE: LENGTH IS NOT THE ACTUAL PAYABLE DISTANCE FOR PIPE ITEMS.

ITEM 663.2003 - IRON WATER MAIN FITTINGS (18" & LARGER) (LB)

POINT	SIZE	BEGIN STA +/-	OFFSET +/-	INV ELEV OF PIPE	LENGTH (FT)	SLOPE	FITTINGS	WEIGHT (LBS)	COMMENTS
24" WATERLINE RELOCATION									
1	24 IN	100+38.3	55.4' RT	690.90'					BEGIN PROP WATERLINE, BOLTED COUPLING TO EXIST (SEE ITEM 663.1824)
					8.9	0.00%			PIPE RUN
2	24 IN	100+47.2	55.4' RT	690.90'			45.0	865	45 DEG HORIZONTAL BEND TO GET TO OFFSET OF 45.6' RT
					13.7	0.00%			PIPE RUN
3	24 IN	100+56.9	45.6' RT	690.90'			45.0	865	45 DEG HORIZONTAL BEND TO STRAIGHTEN NEW RUN
					20.0	0.00%			PIPE RUN
4	24 IN	100+76.9	45.6' RT	690.90'					CONNECTION JT
					20.0	-0.90%			PIPE RUN
5	24 IN	100+96.9	45.6' RT	690.72'					CONNECTION JT
					20.0	-0.90%			PIPE RUN
6	24 IN	101+16.9	45.6' RT	690.54'					CONNECTION JT
					20.0	-0.50%			PIPE RUN
7	24 IN	101+36.9	45.5' RT	690.44'			22.5	986	22 1/2 DEG HORIZONTAL BEND (SLIGHTLY ROTATED) TO GET TO OFFSET OF 41.7' RT & REACH LOWER ELEVATION OF 689.67'
					20.0	-3.85%			PIPE RUN
8	24 IN	101+56.5	41.7' RT	689.67'			22.5	986	22 1/2 DEG HORIZONTAL BEND (SLIGHTLY ROTATED) TO STRAIGHTEN NEW RUN AT LOWER ELEVATION OF 689.67'
					20.0	0.00%			PIPE RUN
9	24 IN	101+76.5	41.7' RT	689.67'					CONNECTION JT
					20.0	-1.25%			PIPE RUN
10	24 IN	101+96.5	41.6' RT	689.42'					CONNECTION JT
					20.0	0.00%			PIPE RUN
11	24 IN	102+16.5	41.6' RT	689.42'				1360	REDUCER 30" X 24" - TIES IN TO EXISTING DUCTILE IRON PIPE (END)
							TOTAL WEIGHT:	5062 LBS	

NOTE: LENGTH IS NOT THE ACTUAL PAYABLE DISTANCE FOR PIPE ITEMS.

ITEM 552.17 - SHIELDS & SHORNING (SF)

STATION	LENGTH (X2) (FT)	WIDTH (FT)	DEPTH (FT)	AVG. DEPTH (FT)	AREA (SF)	PHASE
EXISTING 8" WATERLINE REMOVAL						PHASE 3C
102+11		2.0	5.6		11.2	
	462.0			5.4	2494.8	
104+42		2.0	5.2		10.4	
PROPOSED 8" WATERLINE RELOCATION & SERVICE CONNECTION						
102+91		2.0	5.6		11.2	
	18.0			5.6	100.8	
102+91		2.0	5.6		11.2	
	302.0			5.4	1630.8	
104+42		2.0	5.2		10.4	
				TOTAL:	4281.00 SF	

ITEM 552.17 - SHIELDS & SHORNING (SF)

STATION	LENGTH (X2) (FT)	WIDTH (FT)	DEPTH (FT)	AVG. DEPTH (FT)	AREA (SF)	PHASE
PROPOSED 24" WATERLINE RELOCATION & SERVICE CONNECTION:						PHASE 3C
100+38		6.2	7.0		43.1	
	18.0			7.0	126.0	
100+47		6.2	7.0			
SKEWED 45°	28.0			6.8	190.4	
100+57		6.2	6.6			
	80.0			7.0	560.0	
101+37		6.2	7.4			
SKEWED 22.5°	20.0			7.4	147.0	
101+57		6.2	7.3			
	60.0			7.7	462.0	
102+16		6.2	8.1		49.9	
				TOTAL:	1579.00 SF	

ITEM 204.01 - CONTROLLED LOW STRENGTH MATERIAL (CLSM) (CY)

START STA.	END STA.	LENGTH (FT)	OFFSET	PIPE DIA. (FT)	VOLUME (CY)
TRANSIT ROAD - 24" WATER LINE (A.I.P.)					
100+37.9	100+68.8	41.6	RT	2.0	4.84
TRANSIT ROAD - 30" WATER LINE (A.I.P.)					
100+68.8	102+16.1	148.4	RT	2.5	26.98
				TOTAL:	27.0

AFFIX SEAL:
ON:

D264571
STATE OF NEW YORK
ROBERT F. SCHALLER
NO. 082465
LICENSED PROFESSIONAL ENGINEER

ALTERED BY:
ON:

AS-BUILT REVISIONS
DESCRIPTION OF ALTERATIONS:

NY 78, TRANSIT ROAD, S.H. 1334A-1
FRENCH ROAD TO WEHRLE DRIVE
TOWNS OF CHEEKTOWAGA & LANCASTER
VILLAGE OF DEPEW
COUNTY: ERIE REGION: 05

PIN 5813.61
NY 78
UTILITY QUALITY LEVEL D

BRIDGES

CULVERTS

ALL DIMENSIONS IN ft UNLESS OTHERWISE NOTED

WATERLINE NOTES & TABLES
SHEET 2 OF 2

CONTRACT NUMBER
D264571

DRAWING NO. WLNT-2
SHEET NO. 307

IT IS A VIOLATION OF LAW FOR ANY PERSON, UNLESS THEY ARE ACTING UNDER THE DIRECTION OF A LICENSED PROFESSIONAL ENGINEER, ARCHITECT, LANDSCAPE ARCHITECT, OR LAND SURVEYOR, TO ALTER AN ITEM IN ANY WAY. IF AN ITEM BEARING THE STAMP OF A LICENSED PROFESSIONAL IS ALTERED, THE ALTERING ENGINEER, ARCHITECT, LANDSCAPE ARCHITECT, OR LAND SURVEYOR SHALL STAMP THE DOCUMENT AND INCLUDE THE NOTATION "ALTERED BY" FOLLOWED BY THEIR SIGNATURE, THE DATE OF SUCH ALTERATION, AND A SPECIFIC DESCRIPTION OF THE ALTERATION.

NEW YORK STATE OF OPPORTUNITY. Department of Transportation

PROJECT MANAGER S. S. VAIDYA
CHECK R. F. SCHALLER
DRAFTING C. L. CRITES
CHECK R. F. SCHALLER
DESIGN C. L. CRITES
JOB MANAGER R. F. SCHALLER
DESIGN SUPERVISOR S. S. VAIDYA
FILE NAME = 581361_CPH_HWY_WLNT-2.dgn
DATE/TIME = 16-JUN-2021 09:24
USER = ccrites

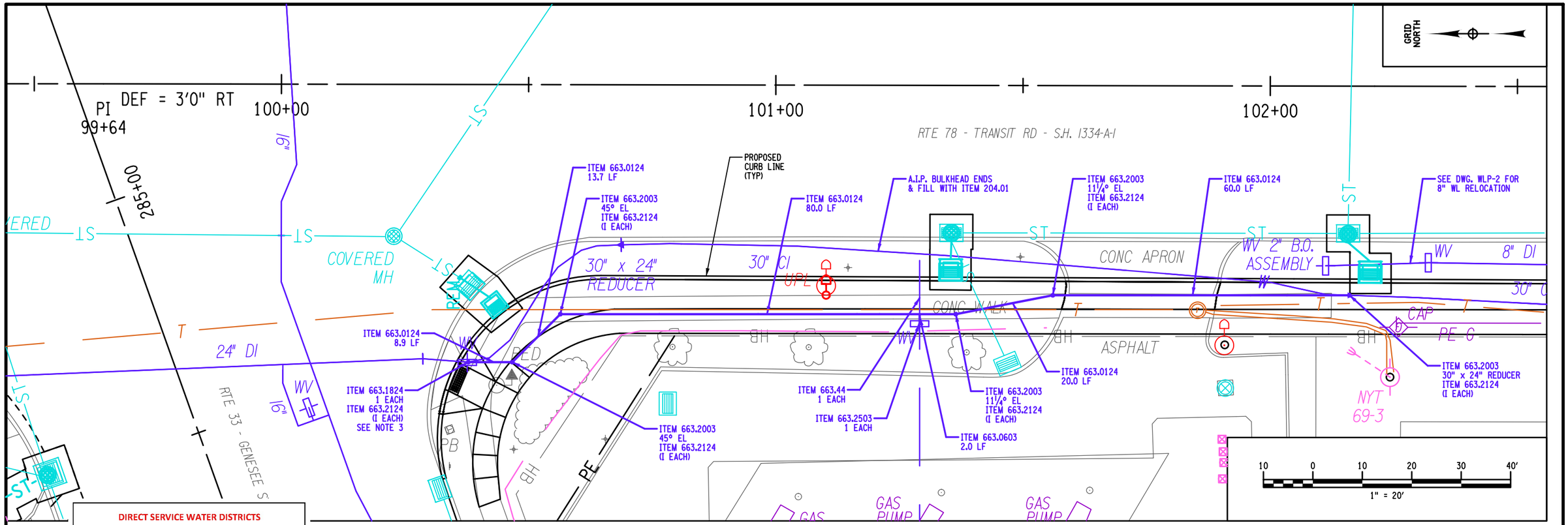

DIRECT SERVICE WATER DISTRICTS

SWD APPROVED (X) APPROVED AS CORRECTED ( )
NOT APPROVED ( ) REVISE AND RESUBMIT ( )

CHECKING OF THE DRAWINGS BY THE AUTHORITY ENGINEERS IS ONLY FOR THE PURPOSE OF ASCERTAINING COMPLIANCE WITH THE PHYSICAL ASPECTS OF GOOD WATER WORKS PRACTICES AND WITH CURRENT DISTRIBUTION SYSTEMS PLANNING.

ERIE COUNTY WATER AUTHORITY

BY Gerald F. Kowalski DATE 06/21/2021

THIS APPROVAL EXPIRES THREE YEARS FROM THE DATE OF APPROVAL

VERTICAL SCALE 0 2 4'
HORIZONTAL SCALE 0 20 40 60 80'

24" WATERLINE RELOCATION

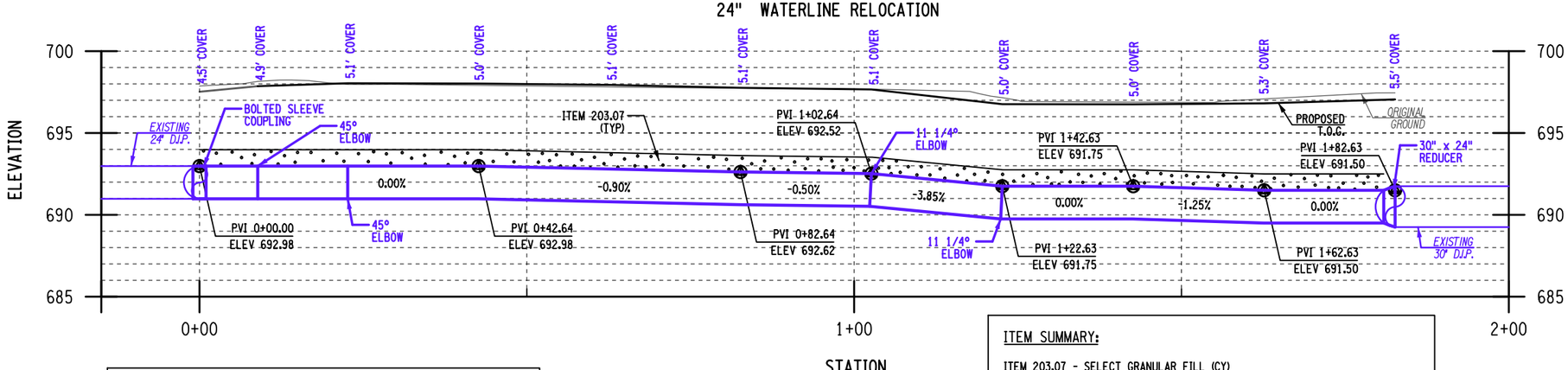

NOTES:

1. STATIONS REPRESENT CENTER LENGTH OF WATERLINE.
2. SEE DWGS WLNT-1 & 2, AND WLD-1 THRU 6 FOR ADDITIONAL INFORMATION.
3. AN ANCHOR COLLAR SHALL BE USED AT THIS RESTRAINED JOINT AND SHALL BE INCLUDED IN THE COST BID FOR ITEM 663.2124. REFER TO WLD-3 FOR AN ANCHOR COLLAR DETAIL.

ITEM SUMMARY:

ITEM 203.07 - SELECT GRANULAR FILL (CY)
ITEM 204.01 - CONTROLLED LOW STRENGTH MATERIAL (CLSM) (CY)
ITEM 663.0124 - DUCTILE IRON CEMENT LINED WATER PIPE, 24" (LF)
ITEM 663.0603 - COPPER WATER SERVICE PIPE ¾" (LF)
ITEM 663.1824 - BOLTED SLEEVE TYPE COUPLING, 24" (EA)
ITEM 663.2003 - IRON WATER MAIN FITTINGS (18" & LARGER) (LB)
ITEM 663.2124 - WEDGE TYPE MECHANICAL RESTRAINT GLANDS, 24" (EA)
ITEM 663.2503 - WATER SERVICE CONNECTION ¾" (EA)
ITEM 663.44 - REMOVE & DISPOSE OF EXISTING WATER SERVICE CONNECTION (EA)

AFFIX SEAL: ON:

D264571 STATE OF NEW YORK ROBERT F. SCHALLER LICENSED PROFESSIONAL ENGINEER NO. 082465

ALTERED BY: ON:

AS-BUILT REVISIONS
DESCRIPTION OF ALTERATIONS:

NY 78, TRANSIT ROAD, S.H. 1334A-1
FRENCH ROAD TO WEHRLE DRIVE
TOWNS OF CHEEKTOWAGA & LANCASTER
VILLAGE OF DEPEW
COUNTY: ERIE REGION: 05

PIN 5813.61
NY 78
UTILITY QUALITY LEVEL D

BRIDGES | CULVERTS

ALL DIMENSIONS IN ft UNLESS OTHERWISE NOTED

24" WATERLINE RELOCATION
PLAN & PROFILE

CONTRACT NUMBER D264571

DRAWING NO. WLP-1
SHEET NO. 308

IT IS A VIOLATION OF LAW FOR ANY PERSON, UNLESS THEY ARE ACTING UNDER THE DIRECTION OF A LICENSED PROFESSIONAL ENGINEER, ARCHITECT, LANDSCAPE ARCHITECT, OR LAND SURVEYOR, TO ALTER AN ITEM IN ANY WAY. IF AN ITEM BEARING THE STAMP OF A LICENSED PROFESSIONAL IS ALTERED, THE ALTERING ENGINEER, ARCHITECT, LANDSCAPE ARCHITECT, OR LAND SURVEYOR SHALL STAMP THE DOCUMENT AND INCLUDE THE NOTATION "ALTERED BY" FOLLOWED BY THEIR SIGNATURE, THE DATE OF SUCH ALTERATION, AND A SPECIFIC DESCRIPTION OF THE ALTERATION.

NEW YORK STATE OF OPPORTUNITY. Department of Transportation

PROJECT MANAGER S. S. VAIDYA
CHECK R. F. SCHALLER
DRAFTING C. L. CRITES
CHECK R. F. SCHALLER
DESIGN C. L. CRITES
JOB MANAGER R. F. SCHALLER
DESIGN SUPERVISOR S. S. VAIDYA

FILE NAME = 581361_CPH_HWY_WLP-1.dgn
DATE/TIME = 16-JUN-2021 09:24
USER = cartes

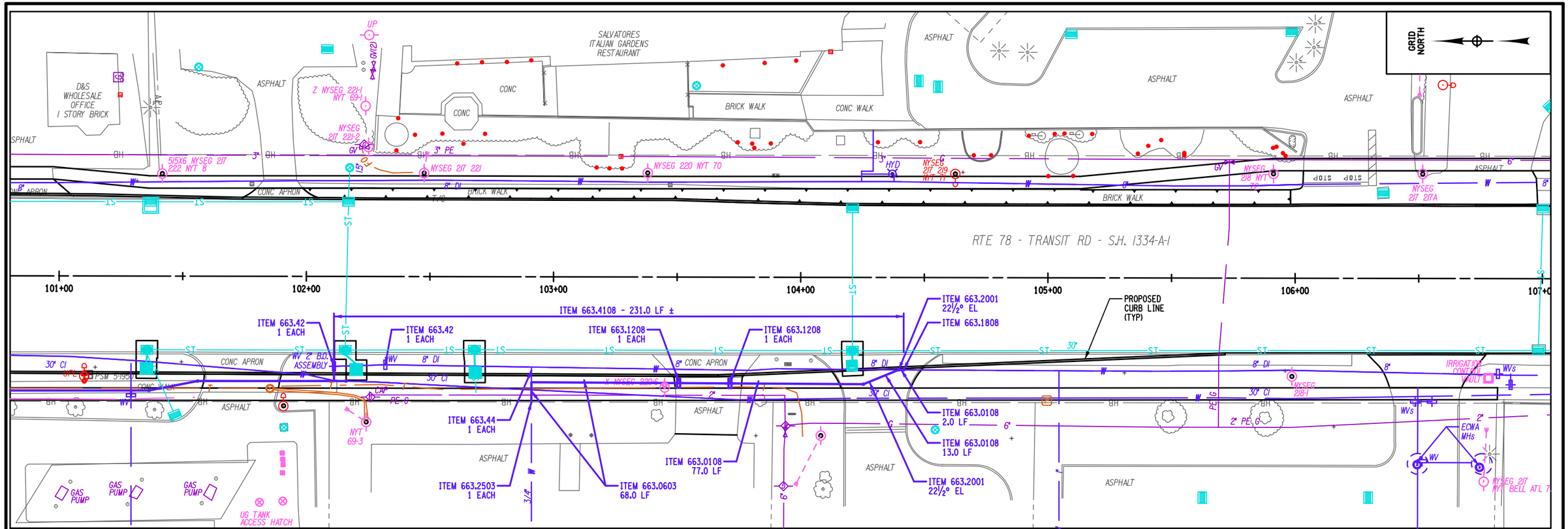

8" WATERLINE RELOCATION

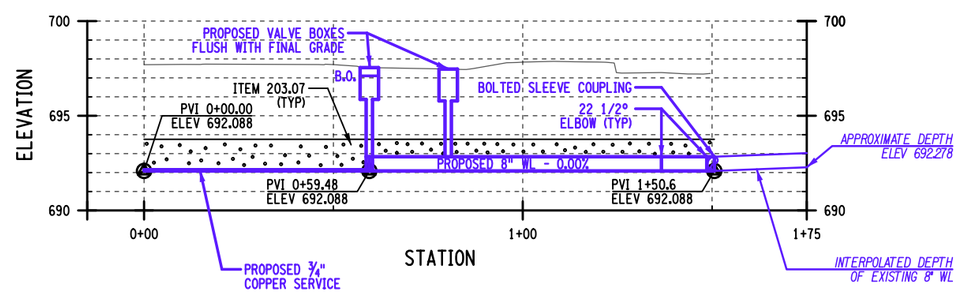

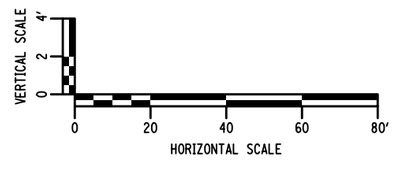

DIRECT SERVICE WATER DISTRICTS

SWD APPROVED (X) APPROVED AS CORRECTED ( )
NOT APPROVED ( ) REVISE AND RESUBMIT ( )

CHECKING OF THE DRAWINGS BY THE AUTHORITY ENGINEERS IS ONLY FOR THE PURPOSE OF ASCERTAINING COMPLIANCE WITH THE PHYSICAL ASPECTS OF GOOD WATER WORKS PRACTICES AND WITH CURRENT DISTRIBUTION SYSTEMS PLANNING.

ERIE COUNTY WATER AUTHORITY

BY Gerald F. Kowalski DATE 06/21/2021

THIS APPROVAL EXPIRES THREE YEARS FROM THE DATE OF APPROVAL

ITEM SUMMARY:

ITEM 203.07 - SELECT GRANULAR FILL (CY)
ITEM 663.0108 - DUCTILE IRON CEMENT LINED WATER PIPE, 8" (LF)
ITEM 663.0603 - COPPER WATER SERVICE PIPE ¾" (LF)
ITEM 663.1208 - DOUBLE DISK GATE VALVE & VALVE BOX, 8" (EA)
ITEM 663.1808 - BOLTED SLEEVE TYPE COUPLING, 8" (EA)
ITEM 663.2001 - IRON WATER MAIN FITTINGS (3" TO 8") (LB)
ITEM 663.2503 - WATER SERVICE CONNECTION ¾" (EA)
ITEM 663.4108 - REMOVE & DISPOSE EXISTING WATER MAIN, 8" (LF)
ITEM 663.42 - REMOVE & DISPOSE OF EXISTING WATER VALVE & VALVE BOX (EA)
ITEM 663.44 - REMOVE & DISPOSE OF EXISTING WATER SERVICE CONNECTION (EA)

NOTES:

1. STATIONS REPRESENT CENTER LENGTH OF WATERLINE.
2. SEE DWGS WLNT-1 & 2, AND WLD-1 THRU 6 FOR ADDITIONAL INFORMATION.

AFFIX SEAL:
ON:

D264571
STATE OF NEW YORK
ROBERT F. SCHALLER
LICENSED PROFESSIONAL ENGINEER
NO. 082465

ALTERED BY:
ON:

AS-BUILT REVISIONS
DESCRIPTION OF ALTERATIONS:

NY 78, TRANSIT ROAD, S.H. 1334A-1
FRENCH ROAD TO WEHRLE DRIVE
TOWNS OF CHEEKTOWAGA & LANCASTER
VILLAGE OF DEPEW
COUNTY: ERIE REGION: 05

PIN 5813.61
NY 78
UTILITY QUALITY LEVEL D

BRIDGES

CULVERTS

ALL DIMENSIONS IN ft UNLESS OTHERWISE NOTED

8" WATERLINE RELOCATION
PLAN & PROFILE

CONTRACT NUMBER
D264571

DRAWING NO. WLP-2
SHEET NO. 309

IT IS A VIOLATION OF LAW FOR ANY PERSON, UNLESS THEY ARE ACTING UNDER THE DIRECTION OF A LICENSED PROFESSIONAL ENGINEER, ARCHITECT, LANDSCAPE ARCHITECT, OR LAND SURVEYOR, TO ALTER AN ITEM IN ANY WAY. IF AN ITEM BEARING THE STAMP OF A LICENSED PROFESSIONAL IS ALTERED, THE ALTERING ENGINEER, ARCHITECT, LANDSCAPE ARCHITECT, OR LAND SURVEYOR SHALL STAMP THE DOCUMENT AND INCLUDE THE NOTATION "ALTERED BY" FOLLOWED BY THEIR SIGNATURE, THE DATE OF SUCH ALTERATION, AND A SPECIFIC DESCRIPTION OF THE ALTERATION.

NEW YORK STATE OF OPPORTUNITY. Department of Transportation

PROJECT MANAGER S. S. VAIDYA
CHECK R. F. SCHALLER
DRAFTING C. L. CRITES
CHECK R. F. SCHALLER
DESIGN C. L. CRITES
JOB MANAGER R. F. SCHALLER
DESIGN SUPERVISOR S. S. VAIDYA

FILE NAME = 581361_CPH_HWY_WLP-2.dgn
DATE/TIME = 16-JUN-2021 09:24
USER = cc-tes

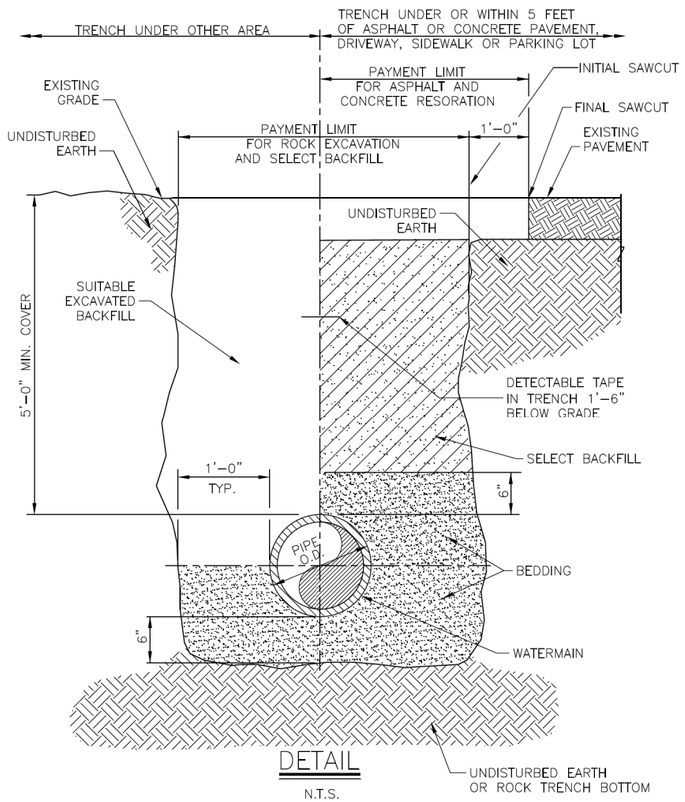

DETAIL

N.T.S.

E:\PUBLIC\ENGINEERING\CURRENT ECWA DETAILS\SD1_TRENCH

ERIE COUNTY WATER AUTHORITY BUFFALO, NEW YORK	STANDARD DETAIL TRENCH THROUGH 16-INCH DIAMETER WATERMAIN	DWG. NO. SD1	
		DATE 4/28/92	REVISED 11/20

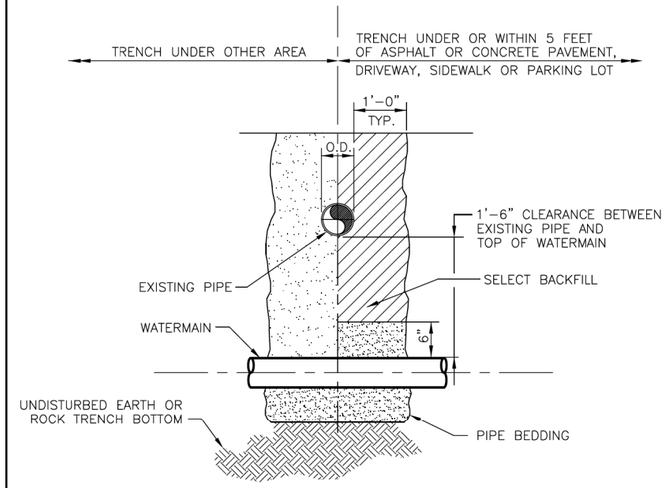

NOTES:

1. ALL EXISTING UTILITIES MUST BE SUPPORTED DURING CONSTRUCTION OF THE NEW WATERMAIN.
2. WHEN CROSSING A SEWERLINE WITH A NEW WATERMAIN, ONE FULL PIPE LENGTH (18 FT. MIN.) SHALL BE USED AT THE POINT OF CROSSING. THE WATERMAIN SHALL BE PLACED SO THAT BOTH JOINT ENDS ARE AS FAR AS POSSIBLE FROM THE EXISTING SEWERLINE.

SECTION

N.T.S.

E:\PUBLIC\ENGINEERING\2005_DETAILS\SD2_PIPE_CROSSING

ERIE COUNTY WATER AUTHORITY BUFFALO, NEW YORK	STANDARD DETAIL PIPE CROSSING	DWG. NO. SD2	
		DATE 4/28/92	REVISED 10/05

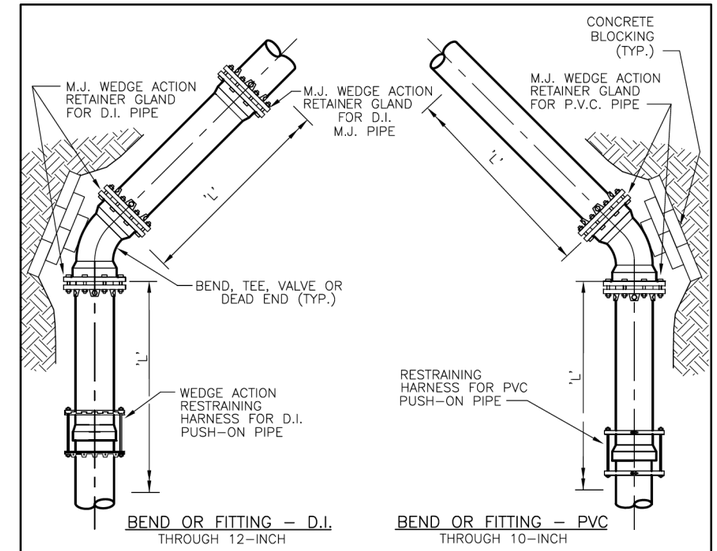

RESTRAINED JOINT SCHEDULE					
PIPE SIZE	PIPE TYPE	11.25° ELBOW 'L'	22.5° ELBOW 'L'	45° ELBOW 'L'	TEE BRANCH, 90° BEND, VALVE OR DEAD END 'L'
8"	D.I.	---	3.0'	---	53.1'
24"	D.I.	3.8'	---	16.0'	---

NOTES:

1. DIMENSION 'L' REPRESENTS THE LENGTH OF RESTRAINED PIPE REQUIRED IN FEET EACH SIDE OF THE PIPE FITTING.

PLAN

N.T.S.

E:\PUBLIC\ENGINEERING\2005_DETAILS\SD4_REST_JOINT_SCHED

ERIE COUNTY WATER AUTHORITY BUFFALO, NEW YORK	STANDARD DETAIL RESTRAINED JOINT SCHEDULE	DWG. NO. SD4	
		DATE 4/28/92	REVISED 10/05

DIRECT SERVICE WATER DISTRICTS

SWD APPROVED (X) APPROVED AS CORRECTED ( )
NOT APPROVED ( ) REVISE AND RESUBMIT ( )

CHECKING OF THE DRAWINGS BY THE AUTHORITY ENGINEERS IS ONLY FOR THE PURPOSE OF ASCERTAINING COMPLIANCE WITH THE PHYSICAL ASPECTS OF GOOD WATER WORKS PRACTICES AND WITH CURRENT DISTRIBUTION SYSTEMS PLANNING.

ERIE COUNTY WATER AUTHORITY

BY Gerald F. Kowalski DATE 06/21/2021

THIS APPROVAL EXPIRES THREE YEARS FROM THE DATE OF APPROVAL

AFFIX SEAL:
ON:

D264571

STATE OF NEW YORK · ROBERT F. SCHALLER · LICENSED PROFESSIONAL ENGINEER · NO. 082465

ALTERED BY:
ON:

AS-BUILT REVISIONS
DESCRIPTION OF ALTERATIONS:

NY 78, TRANSIT ROAD, S.H. 1334A-1
FRENCH ROAD TO WEHRLE DRIVE
TOWNS OF CHEEKTOWAGA & LANCASTER
VILLAGE OF DEPEW
COUNTY: ERIE REGION: 05

PIN 5813.61
NY 78
UTILITY QUALITY LEVEL D

BRIDGES

CULVERTS

ALL DIMENSIONS IN ft UNLESS OTHERWISE NOTED

WATERLINE DETAILS - SHEET 1

CONTRACT NUMBER D264571

DRAWING NO. WLD-1
SHEET NO. 310

IT IS A VIOLATION OF LAW FOR ANY PERSON, UNLESS THEY ARE ACTING UNDER THE DIRECTION OF A LICENSED PROFESSIONAL ENGINEER, ARCHITECT, LANDSCAPE ARCHITECT, OR LAND SURVEYOR, TO ALTER AN ITEM IN ANY WAY. IF AN ITEM BEARING THE STAMP OF A LICENSED PROFESSIONAL IS ALTERED, THE ALTERING ENGINEER, ARCHITECT, LANDSCAPE ARCHITECT, OR LAND SURVEYOR SHALL STAMP THE DOCUMENT AND INCLUDE THE NOTATION "ALTERED BY" FOLLOWED BY THEIR SIGNATURE, THE DATE OF SUCH ALTERATION, AND A SPECIFIC DESCRIPTION OF THE ALTERATION.

NEW YORK STATE OF OPPORTUNITY. Department of Transportation

DESIGN SUPERVISOR S. S. VAIDYA JOB MANAGER R. F. SCHALLER DESIGN C. L. CRITES CHECK R. F. SCHALLER DRAFTING C. L. CRITES CHECK R. F. SCHALLER PROJECT MANAGER S. S. VAIDYA

FILE NAME = 581361_CPH_HWY_WTD-1.dgn
DATE/TIME = 16-JUN-2021 09:24
USER = ccrites

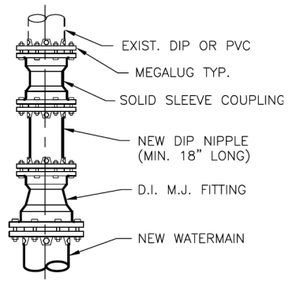

TYPE "A"

CONNECTION TO DIP OR PVC
N.T.S.

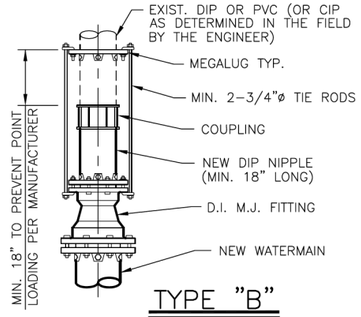

TYPE "B"

CONNECTION TO DIP, PVC OR CIP
N.T.S.

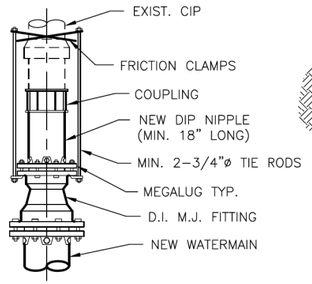

TYPE "C"

CONNECTION TO CIP
N.T.S.

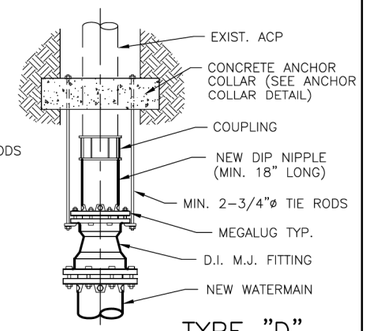

TYPE "D"

CONNECTION TO ACP
N.T.S.

NOTES:

1. VALVES AND TEES MAY BE HARNESSED SIMILARLY.
2. HARNESSING IS FOR RESISTANCE TO INTERNAL PRESSURE-PIPE ITSELF MUST BE SUPPORTED ON FIRM BEDDING AND CAREFULLY BACKFILLED.
3. COAT ALL EXPOSED SURFACES OF HARNESS ASSEMBLY WITH BITUMINOUS COATING.
4. TIE RODS SHALL BE PLACED ON SIDES OF PIPE.

E:\PUBLIC\ENGINEERING\2005_DETAILS\SD5_CONN_EXIST_WMAIN

ERIE COUNTY WATER AUTHORITY BUFFALO, NEW YORK	STANDARD DETAIL TYPICAL CONNECTION TO EXISTING WATERMAIN THROUGH 12-INCH DIAMETER WATERMAIN	DWG. NO. SD5	
		DATE 3/05	REVISED 10/05

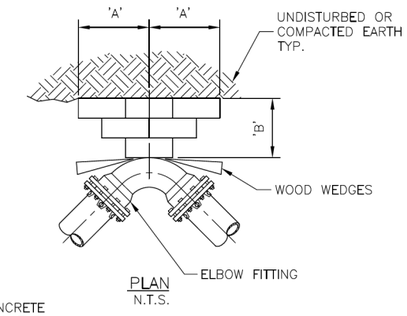

PLAN
N.T.S.

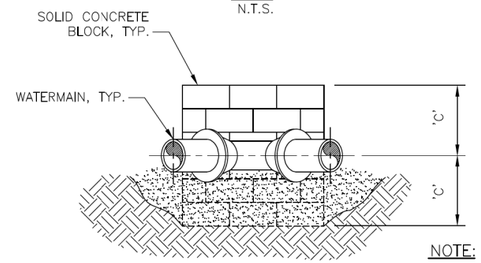

ELEVATION
N.T.S.

NOTE:

1. FITTING TO BE POLYTHYLENE WRAPPED PRIOR TO BEDDING AND CONCRETE BLOCK PLACEMENT.

PIPE SIZE	DIMENSION SCHEDULE											
	11.25° ELBOW			22.5° ELBOW			45° ELBOW			90° ELBOW		
	'A'	'B'	'C'	'A'	'B'	'C'	'A'	'B'	'C'	'A'	'B'	'C'

E:\PUBLIC\ENGINEERING\CURRENT ECWA DETAILS\SD6_THRUST_BLOCKS_ELBOW

ERIE COUNTY WATER AUTHORITY BUFFALO, NEW YORK	STANDARD DETAIL THRUST BLOCKS FOR ELBOW FITTING	DWG. NO. SD6	
		DATE 4/28/92	REVISED 11/20

REFER TO STANDARD SHEET 663-02 FOR THRUST BLOCK DIMENSIONING

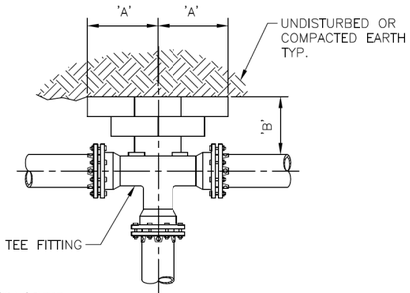

PLAN
N.T.S.

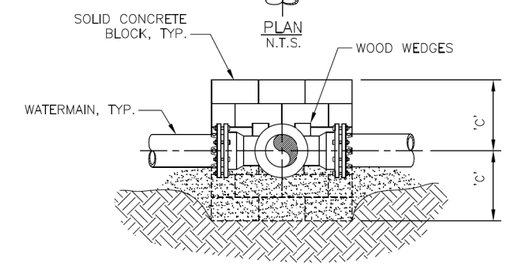

ELEVATION
N.T.S.

NOTES:

1. THRUST BLOCK REQUIRED FOR TEES, HYDRANT LATERAL TEES AND TAPPING SLEEVE INSTALLATIONS.
2. FITTING TO BE POLYETHYLENE WRAPPED PRIOR TO BEDDING AND CONCRETE BLOCK.

BRANCH TEE SIZE	DIMENSION SCHEDULE		
	'A'	'B'	'C'

E:\PUBLIC\ENGINEERING\CURRENT ECWA DETAIL\SD7_THRUST_BLOCKS_TEE

ERIE COUNTY WATER AUTHORITY BUFFALO, NEW YORK	STANDARD DETAIL THRUST BLOCKS FOR TEE OR "DEAD END" FITTING	DWG. NO. SD7	
		DATE 4/28/92	REVISED 11/20

REFER TO STANDARD SHEET 663-02 FOR THRUST BLOCK DIMENSIONING

DIRECT SERVICE WATER DISTRICTS

SWD APPROVED (X) APPROVED AS CORRECTED ( )
NOT APPROVED ( ) REVISE AND RESUBMIT ( )

CHECKING OF THE DRAWINGS BY THE AUTHORITY ENGINEERS IS ONLY FOR THE PURPOSE OF ASCERTAINING COMPLIANCE WITH THE PHYSICAL ASPECTS OF GOOD WATER WORKS PRACTICES AND WITH CURRENT DISTRIBUTION SYSTEMS PLANNING.

ERIE COUNTY WATER AUTHORITY

BY Gerard F. Kowalski DATE 06/21/2021

THIS APPROVAL EXPIRES THREE YEARS FROM THE DATE OF APPROVAL

AFFIX SEAL:
ON:

ALTERED BY:
ON:

D264571
STATE OF NEW YORK
ROBERT F. SCHALLER
NO. 082465
LICENSED PROFESSIONAL ENGINEER

AS-BUILT REVISIONS
DESCRIPTION OF ALTERATIONS:

NY 78, TRANSIT ROAD, S.H. 1334A-1
FRENCH ROAD TO WEHRLE DRIVE
TOWNS OF CHEEKTOWAGA & LANCASTER
VILLAGE OF DEPEW
COUNTY: ERIE REGION: 05

PIN 5813.61
NY 78
UTILITY QUALITY LEVEL D

BRIDGES

CULVERTS

ALL DIMENSIONS IN ft UNLESS OTHERWISE NOTED

WATERLINE DETAILS - SHEET 2

CONTRACT NUMBER D264571

DRAWING NO. WLD-2
SHEET NO. 311

IT IS A VIOLATION OF LAW FOR ANY PERSON, UNLESS THEY ARE ACTING UNDER THE DIRECTION OF A LICENSED PROFESSIONAL ENGINEER, ARCHITECT, LANDSCAPE ARCHITECT, OR LAND SURVEYOR, TO ALTER AN ITEM IN ANY WAY. IF AN ITEM BEARING THE STAMP OF A LICENSED PROFESSIONAL IS ALTERED, THE ALTERING ENGINEER, ARCHITECT, LANDSCAPE ARCHITECT, OR LAND SURVEYOR SHALL STAMP THE DOCUMENT AND INCLUDE THE NOTATION "ALTERED BY" FOLLOWED BY THEIR SIGNATURE, THE DATE OF SUCH ALTERATION, AND A SPECIFIC DESCRIPTION OF THE ALTERATION.

NEW YORK STATE OF OPPORTUNITY. Department of Transportation

DESIGN SUPERVISOR S. S. VAIDYA JOB MANAGER R. F. SCHALLER DESIGN C. L. CRITES CHECK R. F. SCHALLER DRAFTING C. L. CRITES CHECK R. F. SCHALLER PROJECT MANAGER S. S. VAIDYA

FILE NAME = 581361_CPH_HWY_WTD-2.dgn
DATE/TIME = 16-JUN-2021 09:24
USER = ccrites

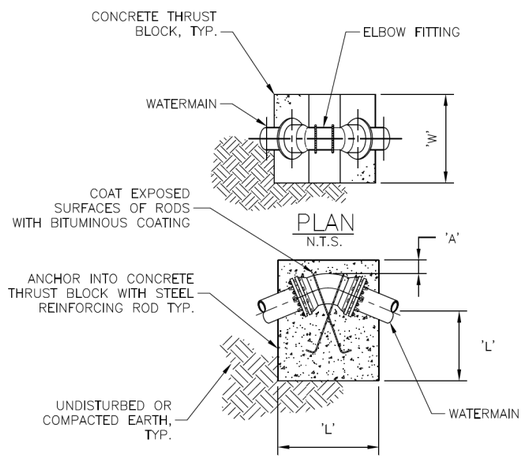

NOTE:

1. FITTING AND ALL RESTRAINTS TO BE POLYETHYLENE WRAPPED PRIOR TO CONCRETE PLACEMENT.

DIMENSION SCHEDULE															
PIPE SIZE	PIPE TYPE	11.25° ELBOW				22.5° ELBOW				45° ELBOW			
		'A'	'W'	'L'	ROD ø	'A'	'W'	'L'	ROD ø	'A'	'W'	'L'	ROD ø

I:\PUBLIC\ENGINEERING\CURRENT ECWA DETAILS\SD8_THRUST_BLOCKS_VBEND

ERIE COUNTY WATER AUTHORITY BUFFALO, NEW YORK	STANDARD DETAIL THRUST BLOCKS FOR VERTICAL BEND	DWG. NO. SD8	
		DATE 4/28/92	REVISED 11/20

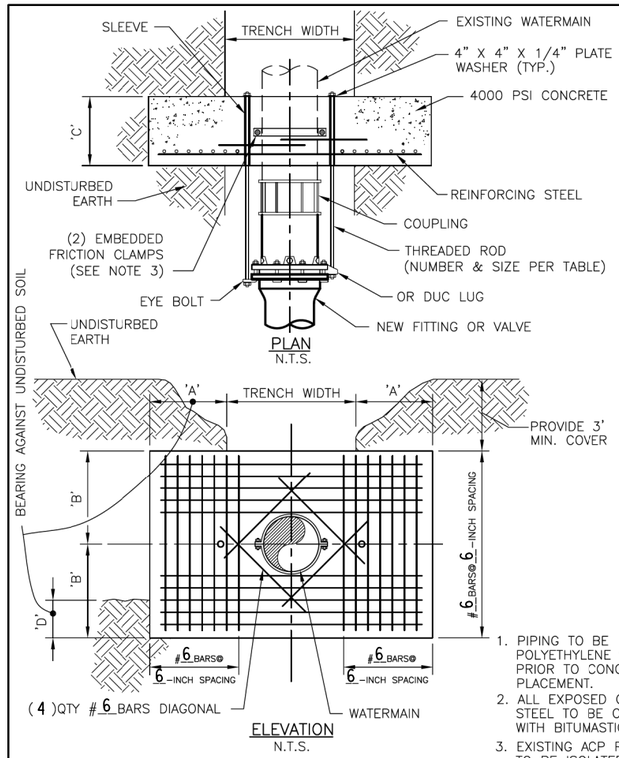

PIPE SIZE	DIMENSION SCHEDULE				THRD. ROD	
	'A'	'B'	'C'	'D'	#	ø
24"	3	3	2	0.5	6	.75"

NOTE:

1. PIPING TO BE POLYETHYLENE WRAPPED PRIOR TO CONCRETE PLACEMENT.
2. ALL EXPOSED CARBON STEEL TO BE COATED WITH BITUMASTIC.
3. EXISTING ACP PIPE TO BE ISOLATED FROM CONCRETE.
4. USE HIGH EARLY CEMENT AND ALLOW CONCRETE TO ACHIEVE 90% STRENGTH BEFORE PLACING WATER-MAIN INTO SERVICE.

I:\PUBLIC\ENGINEERING\2005_DETAILS\SD9_ANCHOR_COLLAR

ERIE COUNTY WATER AUTHORITY BUFFALO, NEW YORK	STANDARD DETAIL ANCHOR COLLAR	DWG. NO. SD9	
		DATE 4/28/92	REVISED 10/05

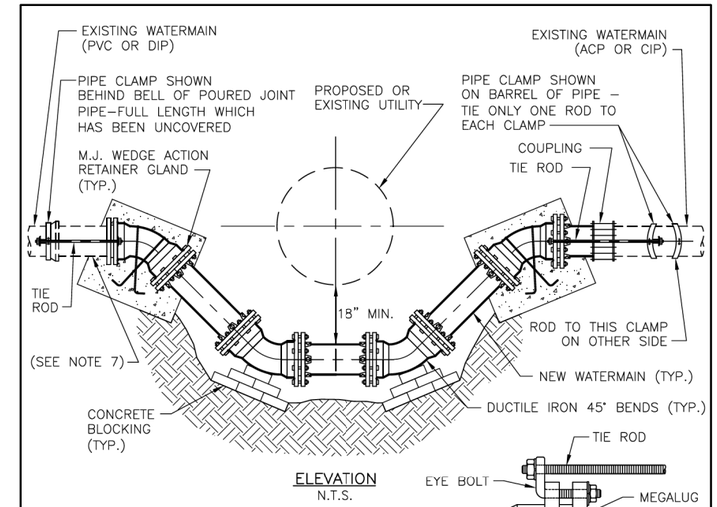

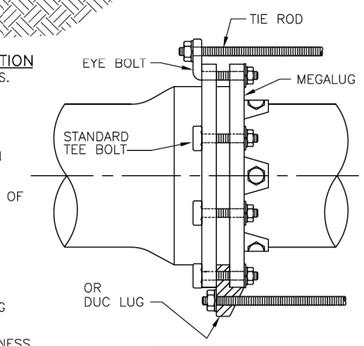

NOTES:

1. RESTRAINED MECHANICAL JOINTS SHOWN EXCEPT AS NOTED.
2. TIE TOP BENDS BACK TO FULL LENGTH OF PIPE IN UNEXCAVATED TRENCH.
3. VALVES, TEES AND HYDRANTS MAY BE HARNESSED SIMILARLY.
4. HARNESSING IS FOR RESISTANCE TO INTERNAL PRESSURES-PIPE ITSELF MUST BE SUPPORTED ON FIRM BEDDING AND CAREFULLY BACKFILLED.
5. COAT ALL EXPOSED SURFACES OF HARNESS ASSEMBLY WITH BITUMINOUS COATING.
6. TIE RODS SHALL BE PLACED ON SIDES OF PIPE.
7. IF EXISTING PIPE IS CIP OR PVC, CONNECT TO NEW FITTING ONLY WHEN ALLOWED BY ENGINEER.

TIE ROD SCHEDULE			
PIPE SIZE	PIPE TYPE	ROD ø	NUMBER OF RODS
8"	DIP	1"	2
24"	DIP	1.5"	4

I:\PUBLIC\ENGINEERING\2005_DETAILS\SD10_HARN_OFFSET_EXIST_WMAIN

ERIE COUNTY WATER AUTHORITY BUFFALO, NEW YORK	STANDARD DETAIL HARNESSING DETAILS-INSTALL OFFSET IN EXISTING WATERMAIN	DWG. NO. SD10	
		DATE 6/00	REVISED 10/05

REFER TO STANDARD SHEET 663-03 FOR THRUST BLOCK DIMENSIONING

DIRECT SERVICE WATER DISTRICTS

SWD APPROVED (X) APPROVED AS CORRECTED ( )
NOT APPROVED ( ) REVISE AND RESUBMIT ( )

CHECKING OF THE DRAWINGS BY THE AUTHORITY ENGINEERS IS ONLY FOR THE PURPOSE OF ASCERTAINING COMPLIANCE WITH THE PHYSICAL ASPECTS OF GOOD WATER WORKS PRACTICES AND WITH CURRENT DISTRIBUTION SYSTEMS PLANNING.

ERIE COUNTY WATER AUTHORITY

BY Leonard F. Kowalski DATE 06/21/2021

THIS APPROVAL EXPIRES THREE YEARS FROM THE DATE OF APPROVAL

AFFIX SEAL: ON:

D264571

STATE OF NEW YORK · ROBERT F. SCHALLER · NO. 082465 · LICENSED PROFESSIONAL ENGINEER

ALTERED BY: ON:

AS-BUILT REVISIONS
DESCRIPTION OF ALTERATIONS:

NY 78, TRANSIT ROAD, S.H. 1334A-1
FRENCH ROAD TO WEHRLE DRIVE
TOWNS OF CHEEKTOWAGA & LANCASTER
VILLAGE OF DEPEW
COUNTY: ERIE REGION: 05

PIN 5813.61
NY 78
UTILITY QUALITY LEVEL D

BRIDGES

CULVERTS

ALL DIMENSIONS IN ft UNLESS OTHERWISE NOTED

WATERLINE DETAILS - SHEET 3

CONTRACT NUMBER D264571

DRAWING NO. WLD-3
SHEET NO. 312

IT IS A VIOLATION OF LAW FOR ANY PERSON, UNLESS THEY ARE ACTING UNDER THE DIRECTION OF A LICENSED PROFESSIONAL ENGINEER, ARCHITECT, LANDSCAPE ARCHITECT, OR LAND SURVEYOR, TO ALTER AN ITEM IN ANY WAY. IF AN ITEM BEARING THE STAMP OF A LICENSED PROFESSIONAL IS ALTERED, THE ALTERING ENGINEER, ARCHITECT, LANDSCAPE ARCHITECT, OR LAND SURVEYOR SHALL STAMP THE DOCUMENT AND INCLUDE THE NOTATION "ALTERED BY" FOLLOWED BY THEIR SIGNATURE, THE DATE OF SUCH ALTERATION, AND A SPECIFIC DESCRIPTION OF THE ALTERATION.

NEW YORK STATE OF OPPORTUNITY. Department of Transportation

PROJECT MANAGER S. S. VAIDYA
CHECK R. F. SCHALLER
DRAFTING C. L. CRITES
CHECK R. F. SCHALLER
DESIGN
JOB MANAGER
DESIGN SUPERVISOR S. S. VAIDYA

FILE NAME = 581361_CPH_HWY_WTD-3.dgn
DATE/TIME = 16-JUN-2021 09:25
USER = cortes

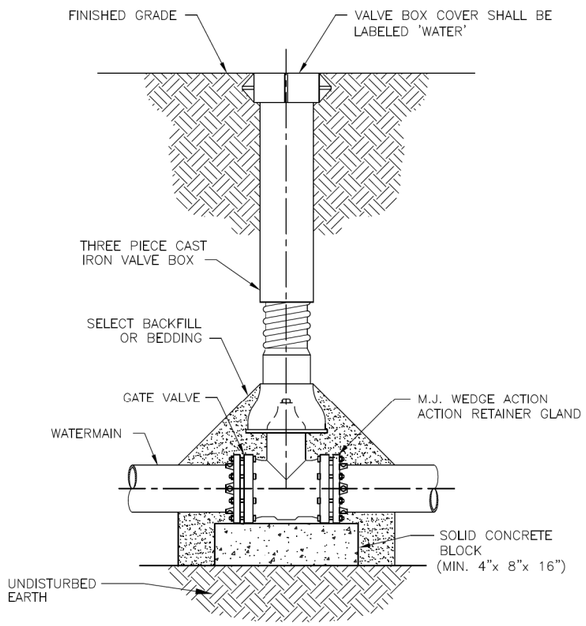

NOTES:

1. VALVE SHALL NOT SUPPORT VALVE BOX.
2. GATE VALVE SHALL BE INSTALLED LEVEL.
3. VALVE BOX SHALL BE PLUMB TO GRADE, WITH OPERATING NUT CENTERED IN BOX.

SECTION

N.T.S.

E:\PUBLIC\ENGINEERING\CURRENT ECWA DETAILS\SD11_GATE_VALVE_SET

ERIE COUNTY WATER AUTHORITY BUFFALO, NEW YORK	STANDARD DETAIL GATE VALVE SETTING	DWG. NO. SD11	
		DATE 4/28/92	REVISED 02/17

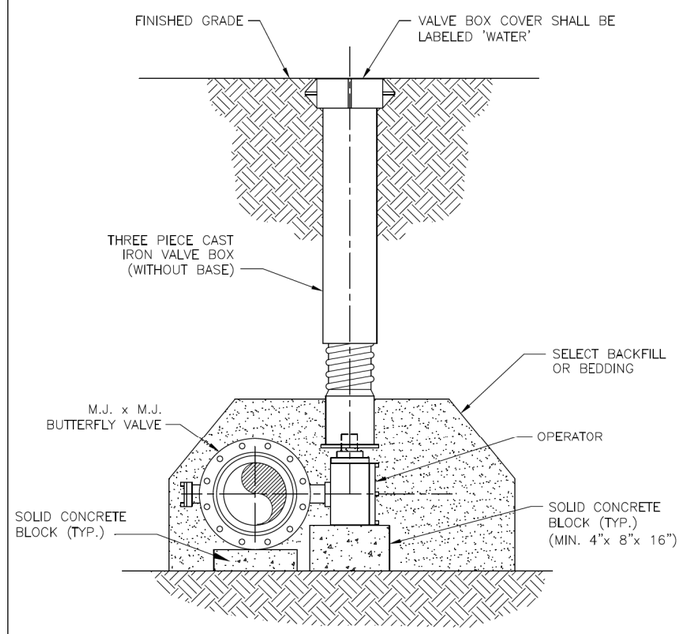

NOTES:

1. VALVE SHALL NOT SUPPORT VALVE BOX.
2. BUTTERFLY VALVE SHALL BE INSTALLED LEVEL.
3. VALVE BOX SHALL BE PLUMB TO GRADE, WITH OPERATING NUT CENTERED.
4. POSITION VALVE SO THAT OPERATOR IS ON SIDE OF WATERMAIN OPPOSITE THE ℄ OF ROADWAY.

SECTION

N.T.S.

E:\PUBLIC\ENGINEERING\CURRENT ECWA DETAILS\SD12_BFLY_VALVE_SET

ERIE COUNTY WATER AUTHORITY BUFFALO, NEW YORK	STANDARD DETAIL BUTTERFLY VALVE SETTING	DWG. NO. SD12	
		DATE 6/00	REVISED 02/17

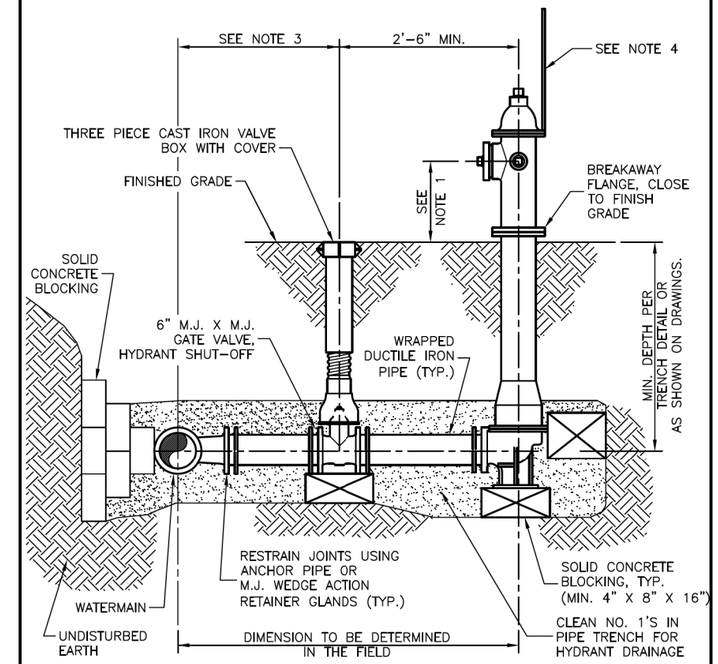

NOTES:

1. CENTERLINE OF THE LOWEST NOZZLE TO FINISHED GRADE SHALL BE A MIN. OF 15" & MAX. OF 18".
2. HYDRANT RISER SHALL BE INSTALLED PLUMB.
3. VALVE BOX SHALL NOT BE PLACED IN PAVEMENT.
4. RELOCATE HYDRANT MARKER (IF PRESENT), FOR WATERLINE REPLACEMENT PROJECTS ONLY.
5. HYDRANT FACE TO BE A MINIMUM OF 3' FROM THE BACK FACE OF ALL CURBS OR A MINIMUM OF 5' FROM ALL EDGES OF PAVEMENT (IF NO CURB).

SECTION

N.T.S.

E:\PUBLIC\ENGINEERING\CURRENT ECWA DETAILS\SD13_HYD_INST

ERIE COUNTY WATER AUTHORITY BUFFALO, NEW YORK	STANDARD DETAIL FIRE HYDRANT INSTALLATION	DWG. NO. SD13	
		DATE 6/00	REVISED 11/16

DIRECT SERVICE WATER DISTRICTS

SWD APPROVED (X) APPROVED AS CORRECTED ( )
NOT APPROVED ( ) REVISE AND RESUBMIT ( )

CHECKING OF THE DRAWINGS BY THE AUTHORITY ENGINEERS IS ONLY FOR THE PURPOSE OF ASCERTAINING COMPLIANCE WITH THE PHYSICAL ASPECTS OF GOOD WATER WORKS PRACTICES AND WITH CURRENT DISTRIBUTION SYSTEMS PLANNING.

ERIE COUNTY WATER AUTHORITY

BY Gerald F. Kowalski DATE 06/21/2021

THIS APPROVAL EXPIRES THREE YEARS FROM THE DATE OF APPROVAL

AFFIX SEAL:
ON:

D264571

STATE OF NEW YORK · ROBERT F. SCHALLER · NO. 082465 · LICENSED PROFESSIONAL ENGINEER

ALTERED BY:
ON:

AS-BUILT REVISIONS
DESCRIPTION OF ALTERATIONS:

NY 78, TRANSIT ROAD, S.H. 1334A-1
FRENCH ROAD TO WEHRLE DRIVE
TOWNS OF CHEEKTOWAGA & LANCASTER
VILLAGE OF DEPEW
COUNTY: ERIE REGION: 05

PIN 5813.61
NY 78
UTILITY QUALITY LEVEL D

BRIDGES

CULVERTS

ALL DIMENSIONS IN ft UNLESS OTHERWISE NOTED

WATERLINE DETAILS - SHEET 4

CONTRACT NUMBER D264571

DRAWING NO. WLD-4
SHEET NO. 313

IT IS A VIOLATION OF LAW FOR ANY PERSON, UNLESS THEY ARE ACTING UNDER THE DIRECTION OF A LICENSED PROFESSIONAL ENGINEER, ARCHITECT, LANDSCAPE ARCHITECT, OR LAND SURVEYOR, TO ALTER AN ITEM IN ANY WAY. IF AN ITEM BEARING THE STAMP OF A LICENSED PROFESSIONAL IS ALTERED, THE ALTERING ENGINEER, ARCHITECT, LANDSCAPE ARCHITECT, OR LAND SURVEYOR SHALL STAMP THE DOCUMENT AND INCLUDE THE NOTATION "ALTERED BY" FOLLOWED BY THEIR SIGNATURE, THE DATE OF SUCH ALTERATION, AND A SPECIFIC DESCRIPTION OF THE ALTERATION.

NEW YORK STATE OF OPPORTUNITY. Department of Transportation

DESIGN SUPERVISOR S. S. VAIDYA JOB MANAGER R. F. SCHALLER DESIGN C. L. CRITES CHECK R. F. SCHALLER DRAFTING C. L. CRITES CHECK R. F. SCHALLER PROJECT MANAGER S. S. VAIDYA

FILE NAME = 581361_CPH_HWY_WTD-4.dgn
DATE/TIME = 16-JUN-2021 09:25
USER = cortes

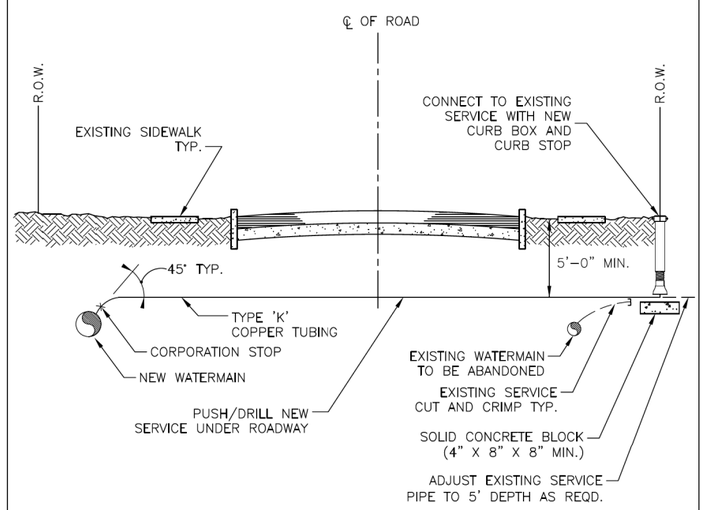

NOTES:

1. EXISTING SERVICES SHALL BE CRIMPED AND ABANDONED IN PLACE.
2. SERVICE SADDLES SHALL BE USED UNDER THE FOLLOWING CONDITIONS:
   A. WHEN SERVICES AND PLACED ON 4" OR SMALLER PIPES.
   B. WHEN SERVICES LARGER THAN 1" ARE PLACED ON A 6" PIPE.
   C. WHEN SERVICES LARGER THAN 1 1/2" ARE PLACED ON AN 8" PIPE.
   D. WHEN SERVICES LARGER THAN 1 1/2" ARE PLACED ON DUCTILE IRON PIPE.
   E. WHEN TAPPING ALL PLASTIC (PVC) PIPE.
   F. WHEN TAPPING ALL ASBESTOS-CEMENT PIPE.
3. CURB BOXES SHALL NOT BE PLACED IN SIDEWALKS, DRIVEWAYS, OR CURB RAMPS.
4. USE POLYETHYLENE FOR 3/4" AND 1" SERVICES GREATER THAN 100 FEET IN LENGTH, AND FOR 1-1/2" AND 2" SERVICES GREATER THAN 60 FEET IN LENGTH. ALL POLYETHYLENE SERVICES SHALL INCLUDE A TRACER WIRE FOR DETECTION BY ECWA FORCES.
5. UNIONS ON COPPER TUBING ARE NOT ALLOWED UNLESS APPROVED BY ECWA PRIOR TO INSTALLATION.

I:\PUBLIC\ENGINEERING\CURRENT ECWA DETAILS\SD16_SERVICE_REPLACE SWD

ERIE COUNTY WATER AUTHORITY BUFFALO, NEW YORK	STANDARD DETAIL SERVICE REPLACEMENT/INSTALLATION	DWG. NO. SD16	
		DATE 4/92	REVISED 10/20

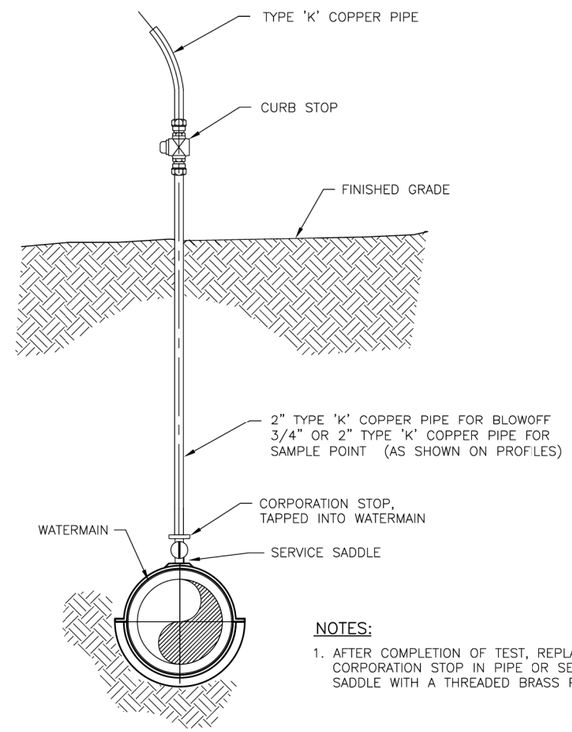

NOTES:

1. AFTER COMPLETION OF TEST, REPLACE CORPORATION STOP IN PIPE OR SERVICE SADDLE WITH A THREADED BRASS PLUG.

ELEVATION

N.T.S.

I:\PUBLIC\ENGINEERING\2005_DETAILS\SD17_TEMP_BO_SAMP_PT

ERIE COUNTY WATER AUTHORITY BUFFALO, NEW YORK	STANDARD DETAIL TEMPORARY BLOW-OFF/SAMPLING POINT	DWG. NO. SD17	
		DATE 4/28/92	REVISED 10/05

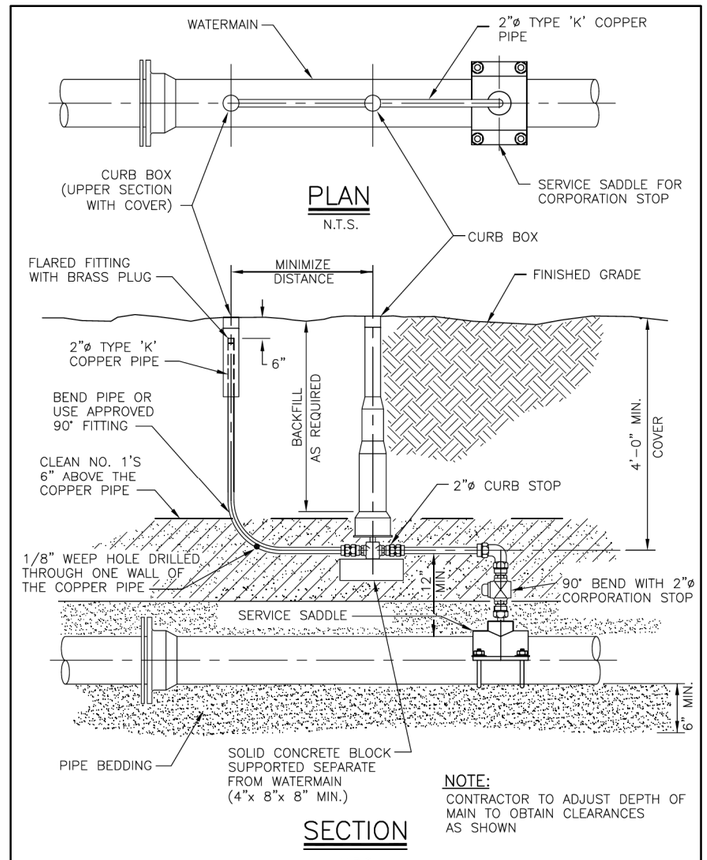

PLAN

N.T.S.

NOTE:

CONTRACTOR TO ADJUST DEPTH OF MAIN TO OBTAIN CLEARANCES AS SHOWN

SECTION

N.T.S.

I:\PUBLIC\ENGINEERING\2005_DETAILS\SD18_BLOWOFF

ERIE COUNTY WATER AUTHORITY BUFFALO, NEW YORK	STANDARD DETAIL BLOWOFF	DWG. NO. SD18	
		DATE 4/28/92	REVISED 10/05

DIRECT SERVICE WATER DISTRICTS

SWD APPROVED (X) APPROVED AS CORRECTED ( )
NOT APPROVED ( ) REVISE AND RESUBMIT ( )

CHECKING OF THE DRAWINGS BY THE AUTHORITY ENGINEERS IS ONLY FOR THE PURPOSE OF ASCERTAINING COMPLIANCE WITH THE PHYSICAL ASPECTS OF GOOD WATER WORKS PRACTICES AND WITH CURRENT DISTRIBUTION SYSTEMS PLANNING.

ERIE COUNTY WATER AUTHORITY

BY Jemard F. Kowalski DATE 06/21/2021

THIS APPROVAL EXPIRES THREE YEARS FROM THE DATE OF APPROVAL

AFFIX SEAL: ON:

ALTERED BY: ON:

D264571 STATE OF NEW YORK ROBERT F. SCHALLER NO. 082465 LICENSED PROFESSIONAL ENGINEER

AS-BUILT REVISIONS
DESCRIPTION OF ALTERATIONS:

NY 78, TRANSIT ROAD, S.H. 1334A-1
FRENCH ROAD TO WEHRLE DRIVE
TOWNS OF CHEEKTOWAGA & LANCASTER
VILLAGE OF DEPEW
COUNTY: ERIE REGION: 05

PIN 5813.61
NY 78
UTILITY QUALITY LEVEL D

BRIDGES

CULVERTS

ALL DIMENSIONS IN ft UNLESS OTHERWISE NOTED

WATERLINE DETAILS - SHEET 5

CONTRACT NUMBER D264571

DRAWING NO. WLD-5
SHEET NO. 314

IT IS A VIOLATION OF LAW FOR ANY PERSON, UNLESS THEY ARE ACTING UNDER THE DIRECTION OF A LICENSED PROFESSIONAL ENGINEER, ARCHITECT, LANDSCAPE ARCHITECT, OR LAND SURVEYOR, TO ALTER AN ITEM IN ANY WAY. IF AN ITEM BEARING THE STAMP OF A LICENSED PROFESSIONAL IS ALTERED, THE ALTERING ENGINEER, ARCHITECT, LANDSCAPE ARCHITECT, OR LAND SURVEYOR SHALL STAMP THE DOCUMENT AND INCLUDE THE NOTATION "ALTERED BY" FOLLOWED BY THEIR SIGNATURE, THE DATE OF SUCH ALTERATION, AND A SPECIFIC DESCRIPTION OF THE ALTERATION.

NEW YORK STATE OF OPPORTUNITY. Department of Transportation

DESIGN SUPERVISOR S. S. VAIDYA JOB MANAGER R. F. SCHALLER DESIGN C. L. CRITES CHECK R. F. SCHALLER DRAFTING C. L. CRITES CHECK R. F. SCHALLER PROJECT MANAGER S. S. VAIDYA

FILE NAME = 581361_CPH_HWY_WTD-5.dgn
DATE/TIME = 16-JUN-2021 09:25
USER = cortes

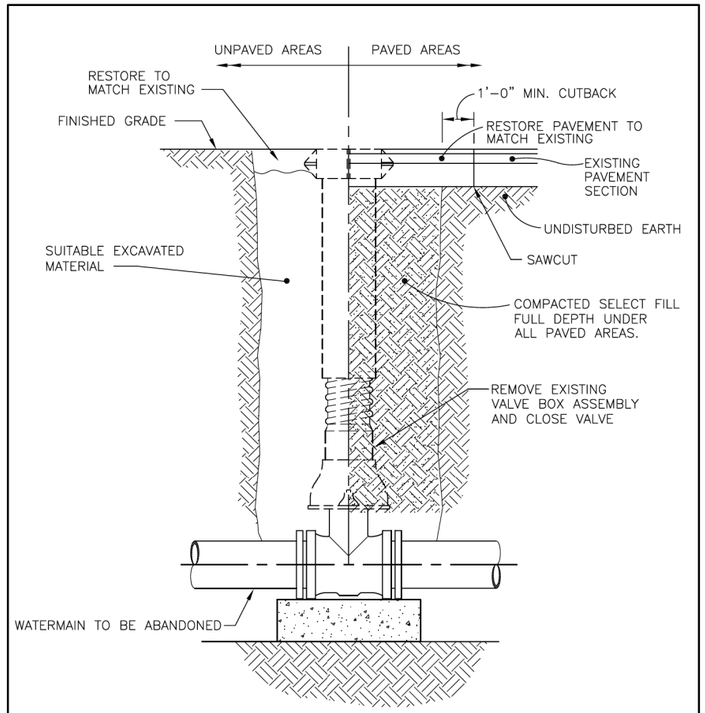

ELEVATION

N.T.S.

I:\PUBLIC\ENGINEERING\2005_DETAILS\SD26_EXIST_VBOX_ABAND

ERIE COUNTY WATER AUTHORITY BUFFALO, NEW YORK	STANDARD DETAIL EXISTING VALVE BOX ABANDONMENT	DWG. NO. SD26 — DATE 6/00 — REVISED 10/05

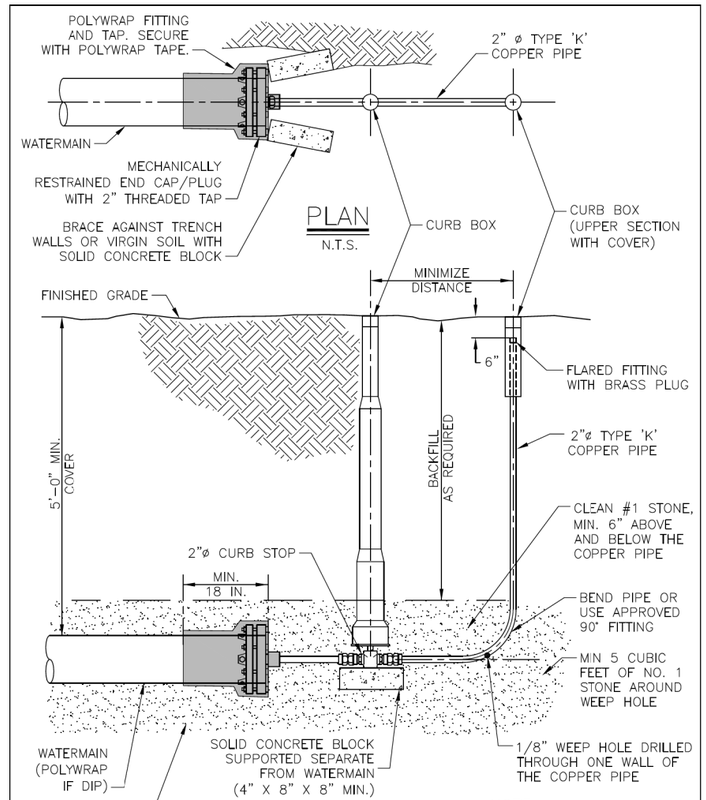

SECTION

N.T.S.

NOTE:
1. CONTRACTOR TO VERIFY COPPER TUBING DRAINS AFTER USE.

I:\PUBLIC\ENGINEERING\CURRENT ECWA DETAILS\SD43_END CAP BLOWOFF

ERIE COUNTY WATER AUTHORITY BUFFALO, NEW YORK	STANDARD DETAIL END CAP BLOWOFF	DWG. NO. SD43 — DATE 5/19 — REVISED

DIRECT SERVICE WATER DISTRICTS

SWD APPROVED (X) APPROVED AS CORRECTED ( )
NOT APPROVED ( ) REVISE AND RESUBMIT ( )

CHECKING OF THE DRAWINGS BY THE AUTHORITY ENGINEERS IS ONLY FOR THE PURPOSE OF ASCERTAINING COMPLIANCE WITH THE PHYSICAL ASPECTS OF GOOD WATER WORKS PRACTICES AND WITH CURRENT DISTRIBUTION SYSTEMS PLANNING.

ERIE COUNTY WATER AUTHORITY

BY Leonard F. Kowalski DATE 06/21/2021

THIS APPROVAL EXPIRES THREE YEARS FROM THE DATE OF APPROVAL

AFFIX SEAL: ON:

ALTERED BY: ON:

D264571
STATE OF NEW YORK
ROBERT F. SCHALLER
NO. 082465
LICENSED PROFESSIONAL ENGINEER

AS-BUILT REVISIONS
DESCRIPTION OF ALTERATIONS:

NY 78, TRANSIT ROAD, S.H. 1334A-1
FRENCH ROAD TO WEHRLE DRIVE
TOWNS OF CHEEKTOWAGA & LANCASTER
VILLAGE OF DEPEW
COUNTY: ERIE REGION: 05

PIN 5813.61
NY 78
UTILITY QUALITY LEVEL D

BRIDGES

CULVERTS

ALL DIMENSIONS IN ft UNLESS OTHERWISE NOTED

WATERLINE DETAILS - SHEET 6

CONTRACT NUMBER D264571

DRAWING NO. WLD-6
SHEET NO. 315

IT IS A VIOLATION OF LAW FOR ANY PERSON, UNLESS THEY ARE ACTING UNDER THE DIRECTION OF A LICENSED PROFESSIONAL ENGINEER, ARCHITECT, LANDSCAPE ARCHITECT, OR LAND SURVEYOR, TO ALTER AN ITEM IN ANY WAY. IF AN ITEM BEARING THE STAMP OF A LICENSED PROFESSIONAL IS ALTERED, THE ALTERING ENGINEER, ARCHITECT, LANDSCAPE ARCHITECT, OR LAND SURVEYOR SHALL STAMP THE DOCUMENT AND INCLUDE THE NOTATION "ALTERED BY" FOLLOWED BY THEIR SIGNATURE, THE DATE OF SUCH ALTERATION, AND A SPECIFIC DESCRIPTION OF THE ALTERATION.

NEW YORK STATE OF OPPORTUNITY. Department of Transportation

DESIGN SUPERVISOR S. S. VAIDYA JOB MANAGER R. F. SCHALLER DESIGN C. L. CRITES CHECK R. F. SCHALLER DRAFTING C. L. CRITES CHECK R. F. SCHALLER PROJECT MANAGER S. S. VAIDYA

FILE NAME = 581361_CPH_HWY_WTD-6.dgn
DATE/TIME = 16-JUN-2021 09:25
USER = cc1tes

DRAINAGE STRUCTURE TABLE - ROUTE 78

DS #	STATION	O/S	PLAN SHEET #	DESCRIPTION OF WORK	PIPE DIA. (LF)	PIPE CORR. HEIGHT (LF)	SLOPE LENGTH	SLOPE	TOP MH COVER OR GRATE ELEV	TOP CUTOUT ELEV (OUT)	TOP PIPE ELEV (OUT)	RYBAN X" + ADJ "A" (LF)	RYBAN X" + ADJ "B" (LF)	RYBAN X" + ADJ "C" (LF)	RYBAN X" + ADJ "D" (LF)	INVERT ELEVS AS LABELED PIPE INV ELEV "A"	PIPE INV ELEV "B"	PIPE INV ELEV "C"	PIPE INV ELEV "D"	FLOOR ELEV	BOTTOM OF STR ELEV	STRUCTURE TYPE (LF) ITEM 604.300103	ITEM 604.300671	ITEM 604.301071	ITEM 604.301772	COVER / GRATE ITEM 655.0701 (EA)	ITEM 655.0705 (EA)	ITEM 655.1103 (EA)	PIPE TYPE (LF) ITEM 605.1602008	ITEM 603.9815	ITEM 603.9818	ITEM 603.9824	ITEM 603.9830	ITEM 603.6001	COLLAR 603.77 (EA)
NEW DS DS 12-3	G 282+37.5	35.3' LT	DRN-26	INTSALL "TYPE Q" DS & CONNECT TO DS 12-4 WITH 96.0' OF 15" SICPP					698.67	695.72	695.38		1.41			**START OF RUN**	694.13 E (DP 12-1 IN)			694.01	693.34				5.4		1.0							
NEW PIPE DP 12-1	G 282+38.8 - G 283+32.9	34.1' LT - 37.4' LT	DRN-12 DRN-26	INSTALL 15" SICPP FROM DS 12-3 TO DS 12-4	1.25'	0.125	95.47	-0.77%								694.13 W (DP 12-1 IN)	693.40 E (DP 12-1 OUT)												96.0					
NEW DS DS 12-4	G 283+35.9	38.0' LT	DRN-12	INTSALL "TYPE A" DS & CONNECT TO DS 12-5 WITH 79.0' OF 18" SICPP					698.04	695.03	694.69	1.40	1.35			693.40 W (DP 12-1 OUT)	693.20 E (DP 12-2 IN)			693.04	692.37	5.7						1.0						
NEW PIPE DP 12-2	G 283+37.2 - G 284+13.6	37.6' LT - 41.8' LT	DRN -12	INSTALL 18" SICPP FROM DS 12-4 TO DS 12-5	1.50'	0.170	77.78	-0.76%								693.20 W (DP 12-2 IN)	692.61 E (DP 12-2 OUT)													77.8				
NEW DS DS 12-5	G 284+18.0	42.8' LT	DRN-12	INTSALL "TYPE F" DS & CONNECT TO DS 12-6 WITH 28.0' OF 24" SICPP					697.60	694.55	694.22	1.62	1.51	0.98	1.89	692.61 W (DP 12-2 OUT)	692.22 E (DP 12-5 IN)	694.25 N (DP 12-3 OUT)	692.34 S (DP 12-4 OUT)	692.06	691.39		6.3			1.0								
NEW PIPE DP 12-3	G 284+13.2 G 284+15.7	52.3' LT - 44.5' LT	DRN -12	INSTALL 6" PVC FROM EXISTING DS (IN GRASS DITCH) TO DS 12-5	0.50'	0.04	9.74	-5.25%										694.76 N (DP 12-3 IN)	694.25 S (DP 12-3 OUT)										10.0					
NEW PIPE DP 12-4	G 284+12.5 G 284+17.0	29.2' LT - 39.3' LT	DRN -12	INSTALL 18" SICPP FROM EXISTING 18" X-CULVERT TO DS 12-5	1.50'	0.17	10.81	-0.36%										692.38 N (DP 12-4 IN)	692.34 S (DP 12-4 OUT)											11.0				1.0
NEW PIPE DP 12-5	G 284+20.0 G 284+49.0	42.2' LT - 43.9' LT	DRN -12	INSTALL 24" SICPP FROM DS 12-5 TO DS 12-6	2.00'	0.17	29.20	-0.30%								692.22 W (DP 12-5 IN)	692.13 E (DP 12-5 OUT)														29.2			
NEW DS DS 12-6	G 284+51.1	44.9' LT	DRN-12	INTSALL "TYPE F" DS & CONNECT TO EXISTING DS (IN ROADWAY) WITH 9.0' OF 24" SICPP					697.77	694.46	694.13	1.77			1.77	692.13 W (DP 12-5 OUT)	693.13 E (DP 12-7 OUT)		692.13 S (DP 12-6 IN)	691.97	691.30		6.5			1.0								
NEW PIPE DP 12-6	G 284+51.3 G 284+52.9	42.0' LT - 32.9' LT	DRN-12	INSTALL 24" SICPP FROM DS 12-6 TO EXISTING DS (IN ROADWAY)	2.00'	0.17	9.00	-0.30%										692.13 N (DP 12-6 IN)	692.10 S (DP 12-6 OUT)												9.0			
NEW PIPE DP 12-7	G 284+70.9 G 284+52.7	61.7' LT - 44.78' LT	DRN-12	INSTALL 15" SICPP FROM EXISTING DS (IN GRASS) TO DS 12-6	1.25'	0.125	24.50	-7.63%								693.13 W (DP 12-7 OUT)	695.00 E (DP 12-7 IN)												25.0					
NEW DS DS 5-2	G 285+88.9	82.74' LT	DRN-12	INTSALL "TYPE A" DS & CONNECT TO DS 5-3 WITH 64.0' OF 18" SICPP					698.12	696.11	695.78		0.34			694.24 W (DP 5-1 IN)	**START OF RUN**			694.08	693.41	4.8					1.0							
NEW PIPE DP 5-1	G 285+89.0 G 286+35.2	88.4' LT - 40.4' LT	DRN-12	INSTALL 18" SICPP FROM DS 5-2 TO DS 5-3	1.50'	0.17	63.50	-3.12%									694.24 E (DP 5-1 IN)		692.26 S (DP 5-1 OUT)											64.0				
NEW PIPE DP 5-2	G 286+34.8 G 286+35.0	38.9' LT - 31.8' LT	DRN-12	INSTALL 30" SICPP FROM DS 5-3 TO EXISITNG DS (IN ROADWAY)	2.50'	0.25	3.13	0.61%										690.26 N (DP 5-2 IN)	690.24 S (DP 5-2 OUT)													4.0		
NEW DS DS 5-3	G 286+34.8	38.9' LT	DRN-12	INSTALL "TYPE J" DS & CONNECT TO DS 5-4 WITH 41.0' OF 30" SICPP					696.96	693.09	692.75		2.33	1.33	2.33		690.26 E (DP 5-3 OUT)	692.26 N (DP 5-1 OUT)	690.26 S (DP 5-2 IN)	690.01	689.34			7.7		1.0								
NEW PIPE DP 5-3	G 286+34.8 G 286+71.2	38.9' LT - 38.3' LT	DRN-12 DRN-27	INSTALL 30" SICPP FROM DS 5-3 TO DS 5-4	2.50'	0.25	34.11	0.60%								690.26 W (DP 5-3 OUT)	690.46 E (DP 5-3 IN)															35.0		
NEW DS DS 5-4	G 286+75.3	37.6' LT	DRN-27	INSTALL "TYPE F" DS & CONNECT TO DS 5-4 WITH 21.0' OF 18" SICPP					696.91	693.29	692.95	2.08	3.04		2.07	690.46 W (DP 5-3 IN)	690.50 E (DP 5-5 OUT)		690.47 S (DP 5-4 OUT)	690.22	689.55		7.4			1.0								
NEW PIPE DP 5-4	G 286+75.5 G 286+76.4	34.2' LT - 26.3' LT	DRN-27	INSTALL 30" SICPP FROM EXISTING 30" X-CULVERT TO DS 5-4	2.50'	0.25	7.85	0.40%										690.47 N (DP 5-4 OUT)	690.50 S (DP 5-4 IN)													8.0		1.0
NEW PIPE DP 5-5	G 286+77.3 G 286+98.2	36.1' LT - 36.2' LT -	DRN-27	INSTALL 18" SICPP FROM DS 5-4 TO DS 5-5	1.50'	0.17	20.89	7.66%								690.50 W (DP 5-5 OUT)	692.10 E (DP 5-5 IN)													21.0				
NEW DS DS 5-5	G 286+99.7	37.7' LT	DRN-27	INSTALL "TYPE Q" DS & CONNECT TO DS 5-6 WITH 52.0' OF 15" SICPP					697.05	693.93	693.60	1.58	1.83			692.10 W (DP 5-5 IN)	692.10 E (DP 5-6 OUT)			691.94	691.27				5.8		1.0							
NEW PIPE DP 5-6	G 287+01.2 G 287+53.2	36.2' LT - 36.3' LT	DRN-27	INSTALL 15" SICPP FROM DS 5-5 TO DS 5-6	1.25'	0.125	52.00	1.73%								692.10 W (DP 5-6 OUT)	693.00 E (DP 5-6 IN)												52.0					
NEW DS DS 5-6	G 287+54.7	37.9' LT	DRN-27	INSTALL "TYPE Q" DS & CONNECT TO DS 5-7 WITH 100.0' OF 15" SICPP					697.66	694.58	694.24		1.54			693.00 W (DP 5-6 IN)	693.00 E (DP 5-7 OUT)			692.88	692.21				5.5		1.0							
NEW PIPE DP 5-7	G 287+56.2 G 288+38.5	36.3' LT - 41.15' LT	DRN-27	INSTALL 15" SICPP FROM DS 5-6 TO DS 5-7	1.25'	0.125	99.25	1.07%								693.00 W (DP 5-7 OUT)	694.06 E (DP 5-7 IN)												100.0					
NEW DS DS 5-7	G 288+56.6	39.1' LT	DRN-27	INSTALL "TYPE Q" DS @ START OF RUN					698.77	695.64	695.30	1.59				694.06 W (DP 5-7 IN)	**START OF RUN**			694.08	693.41				5.4		1.0							
																						SUBTOTAL (SHEET 1):				10.5	20.2	7.7	22.1	4.0	5.0	1.0	10.0	273.0	173.8	38.2	47.0	0.0	2.0

SEE SHEET 2 QUANTITIES ON DWG. DTB-2

AFFIX SEAL:
ON:

D264571

STATE OF NEW YORK · ROBERT F. SCHALLER · LICENSED PROFESSIONAL ENGINEER · NO. 082465

ALTERED BY:
ON:

AS-BUILT REVISIONS
DESCRIPTION OF ALTERATIONS:

NY 78, TRANSIT ROAD, S.H. 1334A-1
FRENCH ROAD TO WEHRLE DRIVE
TOWNS OF CHEEKTOWAGA & LANCASTER
P.I.N. 5813.61
COUNTY: ERIE REGION: 05

PIN 5813.61
NY-71

BRIDGES

CULVERTS

ALL DIMENSIONS IN ft UNLESS OTHERWISE NOTED

DRAINAGE TABLES
PROPOSED DRAINAGE 1

CONTRACT NUMBER
D264571

DRAWING NO. DTB-1
SHEET NO. 316

IT IS A VIOLATION OF LAW FOR ANY PERSON, UNLESS THEY ARE ACTING UNDER THE DIRECTION OF A LICENSED PROFESSIONAL ENGINEER, ARCHITECT, LANDSCAPE ARCHITECT, OR LAND SURVEYOR, TO ALTER AN ITEM IN ANY WAY. IF AN ITEM BEARING THE STAMP OF A LICENSED PROFESSIONAL IS ALTERED, THE ALTERING ENGINEER, ARCHITECT, LANDSCAPE ARCHITECT, OR LAND SURVEYOR SHALL STAMP THE DOCUMENT AND INCLUDE THE NOTATION "ALTERED BY" FOLLOWED BY THEIR SIGNATURE, THE DATE OF SUCH ALTERATION, AND A SPECIFIC DESCRIPTION OF THE ALTERATION.

NEW YORK STATE OF OPPORTUNITY. Department of Transportation

DESIGN SUPERVISOR S. S. VAIDYA
JOB MANAGER R. F. SCHALLER
DESIGN P. M. LAUGEMAN
CHECK R. F. SCHALLER
DRAFTING P. M. LAUGEMAN
CHECK C. L. CRITES
PROJECT MANAGER S. S. VAIDYA
FILE NAME = 581361_CPH_DTB_1_.dgn
DATE/TIME = 22-JUN-2021 12:49
USER = cortes

DRAINAGE STRUCTURE TABLE - ROUTE 78

DS #	STATION	O/S	PLAN SHEET #	DESCRIPTION OF WORK	PIPE DIA. (LF)	PIPE CORR. HEIGHT (LF)	SLOPE LENGTH	SLOPE	TOP MH COVER OR GRATE ELEV	TOP CUTOUT ELEV (OUT)	TOP PIPE ELEV (OUT)	RYBAN X" + ADJ "A" (LF)	RYBAN X" + ADJ "B" (LF)	RYBAN X" + ADJ "C" (LF)	RYBAN X" + ADJ "D" (LF)	INVERT ELEVS AS LABELED PIPE INV ELEV "A"	INVERT ELEVS AS LABELED PIPE INV ELEV "B"	INVERT ELEVS AS LABELED PIPE INV ELEV "C"	INVERT ELEVS AS LABELED PIPE INV ELEV "D"	FLOOR ELEV	BOTTOM OF STR ELEV	STRUCTURE TYPE (LF) ITEM 604.300103	STRUCTURE TYPE (LF) ITEM 604.300671	STRUCTURE TYPE (LF) ITEM 604.301071	STRUCTURE TYPE (LF) ITEM 604.301772	COVER / GRATE ITEM 655.0701 (EA)	COVER / GRATE ITEM 655.0705 (EA)	COVER / GRATE ITEM 655.1103 (EA)	PIPE TYPE (LF) ITEM 605.16020008	PIPE TYPE (LF) ITEM 603.9815	PIPE TYPE (LF) ITEM 603.9818	PIPE TYPE (LF) ITEM 603.9824	PIPE TYPE (LF) ITEM 603.9830	PIPE TYPE (LF) ITEM 603.6001	COLLAR 603.77 (EA)
NEW PIPE DP 11-1	100+37.1 100+43.5	39.72' RT - 44.87'	DRN-12	INSTALL 12" RCP FROM EXISTING PIPE TO DS 11-2	1.00'	0.170	6.63	0.30%								693.30 W (DP 11-1 IN)	693.28 E (DP 11-1 OUT)																	7.0	1.0
NEW DS DS 11-2	100+43.7	45.0' RT	DRN-12	INSTALL "TYPE A" DS & CONNECT TO EXISTING PIPE WITH 6.7' OF 12" SICPP					697.00	693.91	693.58		1.42				693.30 E (DP 11-1 OUT)			692.14	691.47	5.6						1.0							
NEW PIPE DP 11-2	101+35.8 101+35.8	40.5" RT 31.8' RT	DRN-12	INSTALL 12" RCP FROM EXISTING DS (IN ROADWAY) TO DS 11-3	1.00'	0.17	4.02	-0.30%								692.79 W (DP 11-2 IN)	692.78 E (DP 11-2 OUT)																	5.0	1.0
NEW DS DS 11-3	101+35.8	36.6' RT	DRN-12	INSTALL "TYPE Q" DS & TO EXISTING DS WITH 4.1' OF 12" RCP					695.88	694.13	693.80		0.21				692.79 E (DP 11-2 OUT)			692.68	692.01				3.9									
NEW PIPE DP 11-3	102+15.9 102+20.3	29.9' RT 37.9' RT	DRN-12	INSTALL 15" SICPP FROM EXSITNG DS (IN ROADWAY) TO DS 11-4	1.25'	0.125	5.16	0.30%								691.64 W (DP 11-3 IN)	691.62 E (DP 11-3 OUT)												6.0					
NEW DS DS 11-4	102+20.3	37.9' RT	DRN_I3	INTSALL "TYPE Q" DS & CONNECT TO EXISTING PIPE WITH 5.16' OF 12" SICPP					696.22	693.20	692.87		1.47				691.64 E (DP 11-3 OUT)			691.52	690.85				5.4		1.0							
NEW PIPE DP 11-4	102+68.0 102+68.3	29.7' RT 38.8' RT	DRN-13	INSTALL 15" SICPP FROM EXSITING DS (IN ROADWAY) TO DS 11-5	1.25'	0.125	5.64	0.30%								691.85 W (DP 11-4 IN)	691.83 E (DP 11-4 OUT)												6.0					
NEW DS DS 11-5	102+68.3	38.81' RT	DRN-13	INTSALL "TYPE Q" DS & CONNECT TO EXISTING PIPE WITH 5.7' OF 12" SICPP					696.47	693.43	693.10		1.49				691.85 E (DP 11-4 OUT)			691.73	691.06				5.5		1.0							
NEW PIPE DP 11-5	104+20.9 104+21.0	36.7' RT - 29.6' RT	DRN-13	INSTALL 15" SICPP FROM EXISTING TO DS 11-5	1.25'	0.125	3.46	0.30%								692.17 W (DP 11-5 IN)	692.16 E (DP 11-5 OUT)												4.0					
NEW DS DS 11-6	104+20.8	36.93' RT	DRN-13	INSTALL "TYPE Q" DS & CONNECT TO EXISTING PIPE WITH 3.5' OF 12" SICPP					696.74	693.75	693.41		1.45				692.17 E (DP 11-5 OUT)			692.57	691.90				4.9		1.0							
NEW DS DS 17-3	FW 1+15.6	18.9' RT	DRN	INTSALL "TYPE A" DS & CONNECT TO EXISTING DS WITH 4.7' OF 12" RCP					676.99	674.23	673.89		1.10					**START OF RUN**	672.97 S (DP 17-1 IN)	672.81	672.14	4.9						1.0							
NEW PIPE DP 17-1	FW 1+15.5 FW 1+15.3	16.7' RT - 15.1' RT		INSTALL 12" RCP FROM EXISTING DS (IN ROADWAY) TO DS 17-3	1.00'	0.17	4.70	0.00%										672.97 N (DP 17-1 IN)	672.97 S (DP 17-1 OUT)															5.0	
																					SUBTOTAL (SHEET 2):	**10.5**	**0.0**	**0.0**	**19.7**	**0.0**	**3.0**	**2.0**	**0.0**	**16.0**	**0.0**	**0.0**	**0.0**	**17.0**	**2.0**
																					TOTALS:	**21.0**	**21.0**	**8.0**	**42.0**	**4.0**	**8.0**	**3.0**	**10.0**	**289.0**	**174.0**	**39.0**	**47.0**	**17.0**	**4.0**

SEE SHEET 1 QUANTITIES ON DWG. DTB-1

PROJECT MANAGER S. S. VAIDYA
CHECK C. L. CRITES
DRAFTING P. M. LAUGEMAN
CHECK R. F. SCHALLER
DESIGN P. M. LAUGEMAN
JOB MANAGER R. F. SCHALLER
DESIGN SUPERVISOR S. S. VAIDYA

FILE NAME = 581361_CPH_DTB_2_.dgn
DATE/TIME = 22-JUN-2021 12:49
USER = cc rtes

AFFIX SEAL:
ON:

ALTERED BY:
ON:

D264571

STATE OF NEW YORK · ROBERT F. SCHALLER · LICENSED PROFESSIONAL ENGINEER · NO. 082465

AS-BUILT REVISIONS
DESCRIPTION OF ALTERATIONS:

NY 78, TRANSIT ROAD, S.H. 1334A-1
FRENCH ROAD TO WEHRLE DRIVE
TOWNS OF CHEEKTOWAGA & LANCASTER
P.I.N. 5813.61
COUNTY: ERIE REGION: 05

PIN 5813.61
NY-71

BRIDGES

CULVERTS

ALL DIMENSIONS IN ft UNLESS OTHERWISE NOTED

DRAINAGE TABLES
PROPOSED DRAINAGE 2

CONTRACT NUMBER
D264571

DRAWING NO. DTB-2
SHEET NO. 317

IT IS A VIOLATION OF LAW FOR ANY PERSON, UNLESS THEY ARE ACTING UNDER THE DIRECTION OF A LICENSED PROFESSIONAL ENGINEER, ARCHITECT, LANDSCAPE ARCHITECT, OR LAND SURVEYOR, TO ALTER AN ITEM IN ANY WAY. IF AN ITEM BEARING THE STAMP OF A LICENSED PROFESSIONAL IS ALTERED, THE ALTERING ENGINEER, ARCHITECT, LANDSCAPE ARCHITECT, OR LAND SURVEYOR SHALL STAMP THE DOCUMENT AND INCLUDE THE NOTATION "ALTERED BY" FOLLOWED BY THEIR SIGNATURE, THE DATE OF SUCH ALTERATION, AND A SPECIFIC DESCRIPTION OF THE ALTERATION.

NEW YORK STATE OF OPPORTUNITY. Department of Transportation

DRAINAGE STRUCTURE REPAIR TABLE
ITEM 604.0705NN - ALTER DRAINAGE STRUCTURES, LEACHING BASINS & MANHOLES (EA)

DS NAME	CL STATION	OFFSET	SIDE	REPAIR TYPE / FRAME & GRATE / MH COVER					
				ITEM 604.070501 (PARGE)	ITEM 604.070502 (0'-2' REPAIR)	ITEM 604.070503 (2'-4' REPAIR)	ITEM 604.070504 (>4' REPAIR)	ITEM 655.1103 (EA)	ITEM 655.1202 (EA)
TRANSIT ROAD									
DS#1-2	34+63.7	59.1	LT	1					
DS#1-3	35+14.2	58.9	LT	1					
DS#9-4	35+54.9	47.9	RT	1					
DS#2-4	FE 10+85.3	56.8	RT	1					
DS#2-1	FE 10+89.5	23.1	LT	1					
DS#2-3	FE 11+31.8	32.5	RT	1					
DS#1-23	49+03.2	53.7	LT	1					
DS#1-24	49+99.7	53.4	LT	1					
DS#3-5	57+70.5	35.7	LT	1					
DS#9-71	73+09.2	65.2	RT		1				
DS#5-1	97+75.0	30.9	LT	1					
DS#10-2	97+77.4	42.9	RT	1					
DS#10-3	98+29.3	42.9	RT		1			1	
DS#10-4	98+73.8	42.8	RT		1			1	
DS#6-1	99+94.7	64.7	LT	1					
DS#6-2	100+63.3	31.0	LT		1			1	
DS#A11-3	101+36.0	29.1	RT		1				1
DS#6-3	101+37.4	30.9	LT		1			1	
DS#A11-4	102+16.2	29.1	RT		1				1
DS#A11-5	102+68.4	28.9	RT		1				1
DS#A11-6	104+21.3	29.0	RT		1				1
DS#11-7	104+21.4	28.6	LT			1			
DS#11-8	106+36.0	35.0	LT	1					
DS#11-9	106+98.9	28.6	RT	1					
DS#11-10	107+00.5	28.9	LT			1			
DS#11-11	109+74.6	29.1	LT			1			
DS#11-12	109+75.4	28.6	RT	1					
DS#11-13	112+47.1	28.8	RT	1					
DS#11-14	113+15.1	30.8	RT	1					
DS#15-1	113+43.4	57.1	LT	1					
DS#11-16	115+99.3	28.8	LT			1			
DS#11-19	118+44.6	28.7	LT			1			
DS#11-21	121+68.1	28.6	LT			1			
DS#11-22	123+43.5	28.8	RT	1					
DS#11-23	123+44.0	28.7	LT			1			
DS#11-24	124+28.8	28.5	LT			1			
DS#11-25	124+29.9	29.0	RT		1				
DS#8-1	132+99.8	28.4	RT		1				
DS#8-4	135+86.6	27.2	RT		1				
DS#8-5	139+97.4	27.5	RT			1			
DS#8-7	143+29.0	27.5	RT	1					
DS#8-10	145+98.2	29.8	LT			1			
DS#8-9	145+99.2	27.8	RT	1					
DS#8-11	147+56.8	28.1	RT	1					
DS#8-13	148+32.0	29.1	LT			1			
DS#16-1	151+19.6	58.8	RT	1					
DS#8-16	151+19.6	29.6	LT	1					
DS#8-17	154+97.6	29.6	LT		1				
DS#8-18	154+97.8	28.1	RT			1			
DS#8-19	158+43.1	31.1	LT		1				
DS#8-20	158+44.0	26.4	RT			1			
DS#8-21	161+98.0	25.6	RT		1				
DS#8-24	169+43.8	35.8	LT			1			
DS#17-1	169+53.2	22.2	RT	1					
DS#A17-3	169+90.9	105.5	RT			1			1
SHEET 1 - SUBTOTAL:				**25.0**	**15.0**	**15.0**	**0.0**	**4.0**	**5.0**

DRAINAGE STRUCTURE REPAIR TABLE
ITEM 604.0705NN - ALTER DRAINAGE STRUCTURES, LEACHING BASINS & MANHOLES (EA)

DS NAME	CL STATION	OFFSET	SIDE	REPAIR TYPE / FRAME & GRATE / MH COVER					
				ITEM 604.070501 (PARGE)	ITEM 604.070502 (0'-2' REPAIR)	ITEM 604.070503 (2'-4' REPAIR)	ITEM 604.070504 (>4' REPAIR)	ITEM 655.1103 (EA)	ITEM 655.1202 (EA)
TRANSIT ROAD									
DS#8-27	170+16.6	70.1	LT		1			1	
DS#17-4	171+43.7	19.7	RT		1				
DS#17-6	172+45.8	29.1	LT	1					
DS#17-5	172+45.9	13.0	RT	1					
GENESEE STREET									
DS#12-1	G 276+87.7	30.9	LT	1					
DS#12-2	G 278+45.6	30.9	LT	1					
DS#13-1	G 282+77.0	42.9	RT	1					
DS#13-2	G 283+73.3	42.8	RT	1					
DS#13-3	G 284+23.6	42.9	RT			1			
DS#A12-6	G 284+52.9	31.0	LT				1		1
DS#12-7	G 284+73.3	62.6	LT			1			
DS#14-1	G 286+10.0	32.3	RT			1			
DS#A5-3	G 286+36.0	29.9	LT				1		1
DS#14-2	G 286+56.4	32.2	RT	1					
DS#14-4	G 287+06.8	33.0	RT			1			
DS#14-5	G 287+50.8	32.8	RT	1					
DS#14-6	G 288+84.4	29.0	RT	1					
DS#14-7	G 290+90.4	24.1	RT	1					
SHEET 2 - SUBTOTAL:				**10.0**	**2.0**	**4.0**	**2.0**	**1.0**	**2.0**
TOTALS:				**35.0 EA**	**17.0 EA**	**19.0 EA**	**2.0 EA**	**5.0 EA**	**7.0 EA**

DRAINAGE STRUCTURE REMOVAL TABLE

DS NAME	CL STATION	OFFSET	SIDE	WIDTH (FT)	LENGTH (FT)	DEPTH (FT)	ITEM 203.07 (CY)	ITEM 206.0201 (CY)	ITEM 552.17 (SF)
TRANSIT ROAD									
R 11-2	100+39.0	40.2	RT	6.3	6.3	4.5	3.1	6.6	-
GENESEE STREET									
R 12-3	G 276+87.7	30.9	LT	6.3	6.3	4.3	2.9	6.4	-
R 12-3	G 283+36.0	30.3	LT	6.3	6.3	5.0	3.9	7.4	126.6
R 12-4	G 284+13.0	30.2	LT	6.3	7.3	5.9	6.1	10.2	161.7
R 5-4	G 286+76.0	29.6	LT	8.3	7.3	7.4	11.5	16.9	233.3
R 5-5	G 287+00.0	28.8	LT	6.3	6.3	5.3	4.3	7.8	133.4
R 5-6	G 287+55.0	28.3	LT	6.3	6.3	5.0	3.9	7.4	125.8
R 5-7	G 288+79.0	27.9	LT	6.3	6.3	4.5	3.1	6.6	-
						TOTALS:	**23.0 CY**	**70.0 CY**	**781.0 SF**

AFFIX SEAL:
ON:

ALTERED BY:
ON:

D264571

STATE OF NEW YORK · ROBERT F. SCHALLER · NO. 082465 · LICENSED PROFESSIONAL ENGINEER

AS-BUILT REVISIONS
DESCRIPTION OF ALTERATIONS:

NY 78, TRANSIT ROAD, S.H. 1334A-1
FRENCH ROAD TO WEHRLE DRIVE
TOWNS OF CHEEKTOWAGA & LANCASTER
P.I.N. 5813.61
COUNTY: ERIE REGION: 05

PIN 5813.61
NY-71

BRIDGES

CULVERTS

ALL DIMENSIONS IN ft UNLESS OTHERWISE NOTED

DRAINAGE TABLES
DRAINAGE REPAIRS/ALTERS/ADJ 1

CONTRACT NUMBER
D264571

DRAWING NO. DTB-3
SHEET NO. 318

IT IS A VIOLATION OF LAW FOR ANY PERSON, UNLESS THEY ARE ACTING UNDER THE DIRECTION OF A LICENSED PROFESSIONAL ENGINEER, ARCHITECT, LANDSCAPE ARCHITECT, OR LAND SURVEYOR, TO ALTER AN ITEM IN ANY WAY. IF AN ITEM BEARING THE STAMP OF A LICENSED PROFESSIONAL IS ALTERED, THE ALTERING ENGINEER, ARCHITECT, LANDSCAPE ARCHITECT, OR LAND SURVEYOR SHALL STAMP THE DOCUMENT AND INCLUDE THE NOTATION "ALTERED BY" FOLLOWED BY THEIR SIGNATURE, THE DATE OF SUCH ALTERATION, AND A SPECIFIC DESCRIPTION OF THE ALTERATION.

NEW YORK STATE OF OPPORTUNITY. Department of Transportation

DESIGN SUPERVISOR S. S. VAIDYA JOB MANAGER R. F. SCHALLER DESIGN P. M. LAUGEMAN CHECK R. F. SCHALLER DRAFTING P. M. LAUGEMAN CHECK C. L. CRITES PROJECT MANAGER S. S. VAIDYA

FILE NAME = 581361_CPH_DTB_3_.dgn
DATE/TIME = 22-JUN-2021 12:50
USER = crites

TABLE 1

ITEM 621.03 - CLEANING CLOSED DRAINAGE SYSTEMS (LF)

STRUCTURE NUMBER	STRUCTURE NUMBER	STATION FROM	STATION TO	OFFSET FROM	OFFSET TO	COMMENTS	LENGTH (LF)
TRANSIT RD. RIGHT SIDE							
DS 9-1	DS 9-2	33+19.1	34+08.2	51.1	30.8		91.4
		34+09.2	34+03.6	32.0	70.9		
DS 9-2	DS 9-6	34+11.5	36+08.0	30.4	28.2		196.5
DS 9-3	DS 9-4	34+71.3	35+53.5	49.0	48.3		82.2
DS 9-4	DS 9-5	35+56.5	36+05.2	49.7	51.0		1.3
DS 9-5	DS 9-6	36+06.7	36+03.2	49.0	64.1		
DS 9-5	DS 9-6	36+06.7	36+09.2	46.2	29.8		16.6
DS 9-6	DS 9-7	36+10.3	36+19.3	26.7	8.2		20.6
DS 9-7	DS 9-8	36+20.8	36+61.8	6.8	6.7		41.0
DS 9-6	DS 9-12	36+11.3	37+73.9	28.2	25.4		162.6
DS 9-10	DS 9-11	36+71.9	37+01.4	47.5	47.2		29.6
DS 9-11	DS 9-13	37+04.4	37+75.8	47.2	45.6		71.3
DS 9-13	DS 9-14	37+78.8	38+53.2	45.6	43.8		74.5
DS 9-12	DS 9-13	37+77.3	37+75.9	44.2	27.1		17.2
DS 9-12	DS 9-16	37+77.2	39+32.0	25.4	21.4		154.8
DS 9-16	DS 9-15	39+33.7	39+33.3	22.9	40.7		17.8
DS 9-16	DS 9-18	39+35.3	40+43.2	21.2	21.1		107.9
DS 9-18	DS 9-17	40+44.7	40+43.5	22.7	39.5		16.8
DS 9-18	DS 9-19	40+46.5	41+57.1	21.0	20.9		110.5
DS 9-19	DS 9-20	41+59.0	41+60.6	22.5	39.5		17.1
DS 9-19	DS 9-21	41+60.4	42+41.0	20.9	23.0		80.6
DS 9-21	DS 9-22	42+43.2	42+46.8	24.6	39.4		15.3
DS 9-21	DS 9-24	42+44.2	42+98.2	22.4	10.3		55.3
DS 9-24	DS 9-23	42+99.7	42+97.7	11.4	39.5		28.2
DS 9-24	DS 9-26	43+01.4	44+70.9	9.7	9.4		169.5
DS 9-26	DS 9-25	44+72.6	44+74.2	11.1	39.5		28.5
DS 9-26	DS 9-28	44+74.2	45+62.4	9.4	10.8		88.2
DS 9-28	DS 9-27	45+64.1	45+63.5	12.5	40.0		27.5
DS 9-28	DS 9-29	45+65.8	46+39.4	10.8	9.8		73.6
DS 9-29	DS 9-30	46+41.1	46+39.8	11.5	44.1		32.6
DS 9-30	DS 9-31	46+41.2	46+63.4	46.6	80.3		
DS 9-31	DS 9-32	FE 9+13.1	FE 8+74.7	18.3	18.5		
DS 9-32	DS 9-33	FE 8+71.4	FE 9+10.3	18.5	21.7		
DS 9-33	DS 9-34	FE 9+15.8	FE 9+12.8	16.8	20.2		
DS 9-34	DS 9-35	FE 9+14.9	FE 9+52.0	22.1	46.1		
DS 9-29	DS 9-31	46+42.7	48+21.9	9.8	43.8		182.4
DS 9-31	DS 9-32	48+24.9	48+96.6	43.8	42.7		71.6
DS 9-32	DS 9-33	48+98.1	49+05.5	41.2	3.1		38.9
DS 9-32	DS 9-34	49+00.4	50+14.2	42.6	40.8		114.6
DS 9-34	DS 9-35	50+17.2	50+90.6	40.8	39.7		73.4
DS 9-35	DS 9-36	50+93.6	52+10.3	39.7	37.8		116.8
DS 9-36	DS 1-26	52+11.8	52+11.2	36.4	52 L		88.4
DS 9-36	DS 9-37	52+13.3	53+06.6	37.8	36.3		93.3
DS 9-37	DS 9-40	53+09.6	53+95.2	36.3	34.8		85.6
DS 9-40	DS 9-41	53+98.2	54+91.7	34.8	33.7		93.5
DS 9-41	DS 9-42	54+94.7	55+45.8	33.7	22.2		52.5
DS 9-42	DS 9-46	55+49.1	57+14.9	21.7	21.6		165.8
DS 9-46	DS 9-45	57+16.6	57+16.7	23.3	32.2		8.9
DS 9-45	DS 9-44	57+15.2	56+70.7	33.7	33.7		44.5
DS 9-44	DS 9-43	56+67.7	56+13.0	33.7	33.7		54.7
DS 9-46	DS 9-47	57+18.2	57+64.5	21.9	33.8		47.8
DS 9-47	DS 3-5	57+66.0	57+71.1	32.4	34.1 L		66.6
DS 9-48	DS 9-48	57+67.5	58+12.2	33.8	35.0		44.7
DS 9-48	DS 9-49	58+15.2	58+52.3	35.0	36.1		37.1
DS 9-49	DS 9-51	58+55.3	59+68.8	36.1	47.1		114.1
DS 9-50	DS 9-54	59+52.3	59+69.2	40.5	41.9		17.0
DS 9-56	DS 9-55	60+10.7	60+10.0	57.0	63.5		6.5
DS 9-56	DS 9-57	60+13.7	60+64.0	50.3	49.6		50.3
DS 9-57	DS 4-2	60+65.6	60+62.6	48.3	33.2 L		81.5
DS 9-57	DS 9-58	60+67.0	61+28.0	49.8	50.3		61.1
DS 9-58	DS 9-59	61+31.0	62+07.5	50.3	50.5		76.6
DS 9-59	DS 9-60	62+10.5	62+86.2	50.5	60.1		76.3
DS 9-60	DS 9-61	62+87.9	62+88.2	58.5	51.8		6.6
DS 9-60	DS 9-62	62+89.6	64+15.9	60.1	61.2		126.3
DS 9-62	DS 9-63	64+17.5	64+17.8	59.5	51.9		7.6

ITEM 621.03 CONTINUES ON TABLE 2

TABLE 2

ITEM 621.03 - CLEANING CLOSED DRAINAGE SYSTEMS (LF)

STRUCTURE NUMBER	STRUCTURE NUMBER	STATION FROM	STATION TO	OFFSET FROM	OFFSET TO	COMMENTS	LENGTH (LF)
TRANSIT RD. RIGHT SIDE							
DS 9-62	DS 9-66	64+19.2	66+08.5	61.2	60.8		189.3
DS 9-66	DS 9-65	66+10.3	66+21.9	58.3	41.2		20.7
DS 9-65	DS 9-64	66+19.4	65+53.6	39.6	42.6		65.9
DS 9-66	DS 9-67	66+12.0	67+53.2	60.8	57.3		141.2
DS 9-67	DS 9-68	67+56.1	68+89.8	57.2	57.6		133.7
DS 9-68	DS 9-69	68+93.1	70+05.0	57.8	66.0		112.2
DS 9-69	DS 9-70	70+09.4	71+27.4	40.0	88.4		119.3
DS 9-70	DS 9-71	71+32.6	73+07.5	86.0	65.4		176.1
DS 9-71	DS 9-72	73+09.2	75+33.9	65.2	84.8		225.5
DS 9-72	DS 9-73	75+33.9	78+32.2	84.8	58.3		299.5
DS 9-73	DS 9-74	78+32.2	80+25.1	58.3	58.6		192.9
DS 9-74	DS 9-75	80+25.1	82+26.1	58.6	65.6		201.1
DS 9-75	DS 9-76	82+26.1	84+04.0	65.6	77.9		178.3
DS 9-76	DITCH	84+18.0	85+86.8	74.5	88.3		169.4
CREEK	DS 10-1	97+43.9	97+73.9	56.2	59.0		30.0
DS 10-1	DS 10-2	97+75.5	97+77.4	57.3	44.6		12.9
DS 10-1	DS 10-3	97+77.1	98+26.9	59.0	42.9		52.3
DS 10-3	DS 10-4	98+31.6	98+71.5	42.9	42.8		39.9
DS 10-4	DS 10-5	98+76.1	99+35.8	42.8	29.5		61.1
DS 10-5	DS 11-1	99+39.1	100+21.5	29.2	30.0		82.4
DS 11-1	DS 6-1	100+24.3	100+63.3	28.7	29.3 L		69.8
DS 11-1	DS 11-2	100+24.6	100+42.9	30.7	42.4		21.7
DS 11-3	DS 11-3	101+36.0	101+37.8	30.8	35.1		4.7
DS 11-3	DS 11-4	101+38.3	102+13.9	29.1	29.1		75.6
DS 11-4	DS 11-4	102+16.9	102+19.5	30.3	34.3		4.8
DS 11-4	DS 6-3	102+16.2	102+17.4	27.3	29.3 L		56.6
DS 11-4	DS 11-5	102+18.5	102+66.1	29.1	28.9		47.6
DS 11-5	DS 11-5	102+68.4	102+68.7	30.6	36.6		6.0
DS 11-5	DS 11-6	102+70.8	104+19.0	28.9	29.0		148.2
DS 11-6	DS 11-6	104+21.3	104+21.3	30.1	34.6		4.5
DS 11-6	DS 11-7	104+21.3	104+21.4	27.3	26.9 L		54.2
DS 11-6	DS 11-8	104+23.7	106+96.5	29.0	28.6		272.9
DS 11-9	DS 11-10	106+98.9	107+00.5	26.9	27.1 L		54.0
DS 11-9	DS 11-12	107+01.2	109+74.0	28.6	29.0		272.8
DS 11-12	DS 11-11	109+75.5	109+74.6	27.6	26.7 L		54.3
DS 11-12	DS 11-13	109+77.0	112+46.3	29.0	29.2		269.3
DS 11-12	DS 11-13	112+47.1	112+87.9	27.0	54.1 L		
DS 11-13	DS 11-14	112+49.3	113+14.7	29.2	32.9		65.5
DS 11-14	DS 11-15	113+16.6	113+60.4	29.2	27.9 L		71.9
DS 11-14	DS 11-16	113+17.3	115+98.8	30.5	29.3		281.4
DS 11-16	DS 11-17	115+99.8	115+99.6	26.7	26.9 L		53.7
DS 11-17	DS 11-18	116+01.8	118+42.5	29.3	29.6		240.8
DS 11-18	DS 11-19	118+43.4	118+44.6	27.0	27 L		54.0
DS 11-18	DS 11-20	118+45.5	121+64.2	29.6	28.9		318.7
DS 11-20	DS 11-21	121+66.5	121+68.3	27.2	27.8 L		55.0
DS 11-21	DS 11-22	121+68.9	123+41.2	28.9	28.8		172.3
DS 11-22	DS 11-23	123+43.5	123+44.0	27.0	26.9 L		54.0
DS 11-22	DS 11-24	123+45.8	124+27.6	28.7	29.0		81.7
DS 11-24	DS 11-25	124+29.9	124+28.8	27.2	26.8 L		54.0
DS 8-1	DS 8-2	133+00.6	133+00.7	26.4	27.5 L		54.0
DS 8-4	DS 8-3	135+86.7	135+86.3	25.5	28.6 L		54.1
DS 8-5	DS 8-6	139+97.2	139+98.8	26.3	28.4 L		54.8
		143+29.0	143+29.2	29.2	65.6		
DS 8-7	DS 8-8	143+29.0	143+29.7	25.8	28.5 L		54.2
DS 8-9	DS 8-10	145+99.2	145+98.2	26.1	28.1 L		54.2
DS 8-11	DS 8-12	147+58.5	147+81.0	27.4	29.9		22.7
DS 8-12		147+83.1	148+34.9	28.6	41.4 L	TBD	
		147+83.7	148+01.9	31.5	55.4		
		L 0+58.8	L 0+75.3	18.4	18.0		
		L 0+58.6	L 0+98.4	18.0	17.8		
		L 0+56.7	L 0+54.1	16.9 L	13.2		
DS 8-14	DS 8-15	150+45.5	151+18.2	28.0	33.5		72.9
DS 8-15	DS 8-16	150+89.5	151+17.8	60.0	58.7		
DS 8-16	DS 8-17	151+19.9	151+19.9	57.2	35.4		
DS 8-15	DS 8-16	151+19.9	151+19.6	32.1	27.8 L		59.9
DS 8-18	DS 8-17	154+73.0	154+72.5	26.3	27.8 L		54.2
DS 8-20	DS 8-19	158+44.0	158+43.0	25.4	29.3 L		54.7
DS 8-21	DS 8-22	161+97.9	161+97.7	24.5	32.1 L		56.6
DS 17-1	DS 17-2	169+53.2	169+84.3	22.2	35.8	TBD	
DS 17-2	DS 8-23	169+83.3	169+25.0	34.5	42.8 L	TBD	
A 17-3	DS 17-3	FW 1+05.4	FW 1+05.7	12.1	17.6		3.3
TRANSIT RD. LEFT SIDE							
DS 1-1	DS 1-2	33+05.9	34+62.3	61.6	59.4		156.5
DS 1-2	DS 1-3	34+65.3	35+12.8	59.4	59.2		47.5

ITEM 621.03 CONTINUES ON TABLE 3

TABLE 2

ITEM 621.03 - CLEANING CLOSED DRAINAGE SYSTEMS (LF)

STRUCTURE NUMBER	STRUCTURE NUMBER	STATION FROM	STATION TO	OFFSET FROM	OFFSET TO	COMMENTS	LENGTH (LF)
TRANSIT RD. RIGHT SIDE							
DS 1-3	DS 1-4	35+15.8	35+79.4	59.2	58.9		63.6
DS 1-4	DS 1-5	35+82.4	36+21.3	58.9	58.8		38.9
DS 1-5	DS 1-6	36+24.3	36+62.3	58.8	58.6		38.0
DS 1-6	DS 1-7	36+65.3	37+00.9	58.6	58.3		35.6
DS 1-7	DS 1-8	37+03.9	37+50.9	58.3	57.5		47.0
DS 1-8	DS 1-9	37+53.9	38+04.3	57.5	55.8		50.4
DS 1-9	DS 1-10	38+07.3	39+11.3	55.7	50.3		104.1
DS 1-10	DS 1-11	39+14.2	40+10.5	50.1	54.0		96.4
DS 1-12	DS 1-11	40+11.6	40+09.4	52.5	44.9		7.9
DS 1-12	DS 1-13	40+13.9	40+47.1	54.1	53.4		33.2
DS 1-13	DS 1-15	40+50.4	41+28.10	53.4	53.5		77.6
DS 1-15	DS 1-14	41+29.2	41+27.7	51.9	44.3		7.8
DS 1-15	DS 1-16	41+31.4	42+20.6	53.5	53.4		89.2
DS 1-16	DS 1-17	42+22.3	42+23.5	51.8	44.0		7.9
DS 1-17		42+23.9	44+25.0	53.5	57.1		
DS 1-18		44+28.3	45+98.5	57.1	56.1		
DS 1-19	DS 1-21	46+01.8	46+64.8	56.1	58.7		63.1
DS 1-21	DS 1-20	46+64.8	46+23.8	55.8	41.9		43.3
DS 1-20	DS 1-18	46+19.1	45+10.9	41.9	42.5		108.2
DS 2-1	DS 2-2	FE 10+91.8	FE 11+33.4	23.1	23.4		41.7
DS 2-2	DS 2-3	FE 11+35.0	FE 11+31.7	23.0	32.5		55.6
DS 2-3	DS 2-4	FE 11+30.5	FE 10+86.9	34.1	55.1		48.4
DS 2-4	DS 1-22	FE 10+86.9	47+99.4	58.6	54.6		44.9
DS 1-21	DS 1-22	46+67.6	47+99.4	56.6	54.6		131.8
DS 1-22	DS 1-23	48+03.9	49+01.8	53.7	54.0		97.8
DS 1-23	DS 1-24	49+04.8	49+98.3	54.0	53.7		93.5
DS 1-24	DS 1-25	50+01.3	50+99.8	53.7	53.5		98.5
DS 1-25	DS 1-26	51+02.8	52+09.7	53.5	53.4		107.0
DS 1-26	DS 1-27	52+12.7	52+70.0	53.4	50.6		57.3
DS 3-1	DS 3-2	55+50.8	56+10.0	33.9	33.9		59.2
DS 3-2	DS 3-3	56+13.0	56+67.7	33.9	33.9		54.7
DS 3-3	DS 3-4	56+70.7	57+20.1	33.9	33.9		49.3
DS 3-4	DS 3-5	57+23.1	57+68.3	33.9	34.9		45.2
DS 3-5	DS 3-6	57+72.7	58+67.3	36.4	38.3		94.6
DS 4-1	DS 4-2	59+80.2	60+61.1	34.8	34.6		80.9
DS 4-2	DS 4-3	60+64.1	61+29.2	34.6	34.5		65.0
DS 4-3	DS 4-4	61+32.2	61+85.2	34.5	34.4		53.1
DS 4-4	DS 4-5	61+88.2	62+47.5	34.4	34.4		59.2
DS 4-5	DS 4-6	62+50.5	63+95.2	34.4	35.1		144.7
DS 5-1	DS 5-2	97+77.3	98+60.1	30.9	31.0		82.7
DS 5-2	DS 5-3	98+58.4	98+83.1	33.8	91.8		63.0
DS 5-2	DS 5-3 A	98+62.4	98+90.4	32.7	91.6		65.3
DS 6-1	DS 6-2	99+96.6	100+61.0	63.3	32.1		71.6
DS 6-2	DS 6-3	100+65.6	101+35.1	31.0	30.9		69.5
DS 6-3	DS 6-4	101+39.8	102+15.1	30.9	31.0		75.3
DS 6-4	DS 6-5	102+17.4	102+17.9	32.7	43.1		10.4
DS 11-25	DS 7-1	124+29.0	124+28.9	30.3	36.7		9.9
DS 7-1	DS 7-2	124+28.9	124+67.2	38.4	40.3		38.4
DS 11-25	DS 7-2	124+31.2	124+64.9	28.5	40.3		35.7
DS 7-2	DS 7-3	124+67.2	126+83.4	40.3	40.1		216.2
DS 7-3	DS 7-4	126+83.4	128+16.9	40.1	40.4		133.5
DS 7-4	DS 7-5	128+16.9	129+66.5	40.4	40.5		149.6
DS 8-2	DS 8-3	133+03.0	135+85.4	29.3	30.3		282.4
DS 8-3	DS 8-6	135+88.4	139+96.5	30.3	30.1		408.1
DS 8-6	DS 8-8	140+01.1	143+27.4	30.2	30.2		326.2
		143+32.0	144+10.1	30.2	41.3		
		144+13.4	148+34.6	41.7	42.3		
		145+98.0	145+98.3	31.6	41.3		
		148+32.0	148+36.3	30.8	40.6		
		148+38.0	151+18.3	42.2	37.3		
		151+19.6	151+19.9	31.3	35.6		
		151+21.6	154+23.4	37.3	39.1		
		154+26.8	165+22.3	39.0	48.1		
		154+97.6	154+97.8	31.3	41.2		
		158+43.1	158+43.1	32.8	43.6		
		E 0+46.3	E 0+53.3	17.4	15.3		
		E 0+55.7	E 0+61.0	14.9	14.9		
		E 0+64.0	E 1+05.3	14.7	15.1		
		161+97.6	161+97.6	34.9	46.0		
		165+25.7	169+22.3	47.9	44.1		
		169+22.4	168+77.4	44.7	61.5		
DS 8-23	DS 8-24	169+24.0	169+43.8	44.1	35.8		17.3
DS 8-23	DS 8-26	169+24.0	169+77.1	44.1	68.6		56.8
DS 8-26	DS 8-27	169+78.7	170+17.5	69.1	70.1		35.7

ITEM 621.03 CONTINUES ON TABLE 4, SEE DWG. DTB-5

AFFIX SEAL:
ON:

ALTERED BY:
ON:

D264571

STATE OF NEW YORK
ROBERT F. SCHALLER
NO. 082465
LICENSED PROFESSIONAL ENGINEER

AS-BUILT REVISIONS
DESCRIPTION OF ALTERATIONS:

NY 78, TRANSIT ROAD, S.H. 1334A-1
FRENCH ROAD TO WEHRLE DRIVE
TOWNS OF CHEEKTOWAGA & LANCASTER
P.I.N. 5813.61
COUNTY: ERIE REGION: 05

PIN 5813.61
NY-78

BRIDGES

CULVERTS

ALL DIMENSIONS IN ft UNLESS OTHERWISE NOTED

DRAINAGE TABLES
DRAINAGE CLEANING

CONTRACT NUMBER
D264571

DRAWING NO. DTB-4
SHEET NO. 319

IT IS A VIOLATION OF LAW FOR ANY PERSON, UNLESS THEY ARE ACTING UNDER THE DIRECTION OF A LICENSED PROFESSIONAL ENGINEER, ARCHITECT, LANDSCAPE ARCHITECT, OR LAND SURVEYOR, TO ALTER AN ITEM IN ANY WAY. IF AN ITEM BEARING THE STAMP OF A LICENSED PROFESSIONAL IS ALTERED, THE ALTERING ENGINEER, ARCHITECT, LANDSCAPE ARCHITECT, OR LAND SURVEYOR SHALL STAMP THE DOCUMENT AND INCLUDE THE NOTATION "ALTERED BY" FOLLOWED BY THEIR SIGNATURE, THE DATE OF SUCH ALTERATION, AND A SPECIFIC DESCRIPTION OF THE ALTERATION.

NEW YORK STATE OF OPPORTUNITY. Department of Transportation

DESIGN SUPERVISOR S. S. VAIDYA
JOB MANAGER R. F. SCHALLER
DESIGN P. M. LAUGEMAN
CHECK R. F. SCHALLER
DRAFTING P. M. LAUGEMAN
CHECK C. L. CRITES
PROJECT MANAGER S. S. VAIDYA
FILE NAME = 581361_CPH_DTB_4_.dgn
DATE/TIME = 22-JUN-2021 12:50
USER = crites

TABLE A

ITEM 621.04 - CLEAN DRAINAGE STRUCTURES (EA)

STRUCTURE NUMBER	STATION	OFFSET	SIDE	COMMENTS	QTY. (EA)
TRANSIT ROAD					
DS 1-1	33+03.8	62.6	LT		1.0
DS 9-1	33+16.8	51.6	RT		1.0
DS 9-2	34+09.8	30.4	RT		1.0
DS 1-2	34+63.7	59.1	LT	REPAIR LOCATION	
DS 9-3	34+69.7	48.7	RT		1.0
DS 1-3	35+14.2	58.9	LT	REPAIR LOCATION	
DS 9-4	35+54.9	47.9	RT	REPAIR LOCATION	
DS 1-4	35+80.8	58.6	LT		1.0
DS 9-5	36+06.7	47.2	RT		1.0
DS 9-6	36+09.6	28.2	RT		1.0
DS 9-7	36+19.2	6.4	RT		1.0
DS 1-5	36+22.7	58.4	LT		1.0
DS 9-8	36+63.2	6.3	RT		1.0
DS 1-6	36+63.8	58.2	LT		1.0
DS 9-10	36+70.3	47.1	RT		1.0
DS 1-7	37+02.3	58.0	LT		1.0
DS 9-11	37+02.9	46.8	RT		1.0
DS 1-8	37+52.3	57.1	LT		1.0
DS 9-12	37+75.6	25.4	RT		1.0
DS 9-13	37+77.2	45.2	RT		1.0
DS 1-9	38+05.7	55.4	LT		1.0
DS 9-14	38+54.7	43.4	RT		1.0
DS 1-10	39+12.6	50.8	LT		1.0
DS 9-15	39+33.3	41.7	RT		1.0

ITEM 621.04 CONTINUES ON TABLE B

TABLE B

ITEM 621.04 - CLEAN DRAINAGE STRUCTURES (EA)

STRUCTURE NUMBER	STATION	OFFSET	SIDE	COMMENTS	QTY. (EA)
TRANSIT ROAD					
DS 9-16	39+33.7	21.2	RT		1.0
DS 1-11	40+09.2	43.1	LT		1.0
DS 1-12	40+12.2	54.1	LT		1.0
DS 9-17	40+43.5	40.5	RT		1.0
DS 9-18	40+44.9	21.1	RT		1.0
DS 1-13	40+48.8	53.4	LT		1.0
DS 1-14	41+27.6	42.5	LT		1.0
DS 1-15	41+29.7	53.5	LT		1.0
DS 9-19	41+58.8	20.9	RT		1.0
DS 9-20	41+60.5	40.6	RT		1.0
DS 1-16	42+22.3	53.5	LT		1.0
DS 1-17	42+23.4	42.2	LT		1.0
DS 9-21	42+42.6	23.0	RT		1.0
DS 9-22	42+46.7	40.4	RT		1.0
DS 9-23	42+97.6	40.5	RT		1.0
DS 9-24	42+99.7	9.7	RT		1.0
DS 9-26	44+72.6	9.4	RT		1.0
DS 9-25	44+74.2	40.6	RT		1.0
DS 1-18	45+09.4	42.5	LT		1.0
DS 9-27	45+63.5	41.7	RT		1.0
DS 9-28	45+64.1	10.8	RT		1.0
DS 1-19	46+00.1	56.2	LT		1.0
DS 1-20	46+21.4	41.9	LT		1.0
DS 9-29	46+39.1	45.6	RT		1.0
DS 9-30	46+41.1	9.8	RT		1.0
DS 1-21	46+66.2	57.7	LT		1.0
DS 2-4	FE 10+85.3	56.8	RT	REPAIR LOCATION	
DS 2-1	FE 10+89.5	23.1	LT	REPAIR LOCATION	
DS 2-3	FE 11+31.8	32.5	RT	REPAIR LOCATION	
DS 2-2	FE 11+35.0	24.1	LT		1.0
DS 1-22	48+01.6	54.1	LT		1.0
DS 9-31	48+23.3	43.4	RT		1.0
DS 9-32	48+98.0	42.3	RT		1.0
DS 1-23	49+03.2	53.7	LT	REPAIR LOCATION	
DS 9-33	49+05.4	1.3	RT		1.0
DS 1-24	49+99.7	53.4	LT	REPAIR LOCATION	
DS 9-34	50+15.6	40.4	RT		1.0
DS 9-35	50+92.0	39.4	RT		1.0
DS 1-25	51+01.2	53.1	LT		1.0
DS 1-26	52+11.1	53.1	LT		1.0
DS 9-36	52+11.8	37.4	RT		1.0
DS 1-27	52+71.4	50.2	LT		1.0
DS 9-37	53+08.0	35.9	RT		1.0
DS 9-40	53+96.6	34.4	RT		1.0
DS 9-41	54+93.1	33.3	RT		1.0
DS 9-42	55+47.4	21.7	RT		1.0
DS 3-1	55+49.2	33.2	LT		1.0
DS 3-2	56+11.5	33.5	LT		1.0
DS 9-43	56+11.5	33.3	RT		1.0
DS 3-3	56+69.1	33.5	LT		1.0
DS 9-44	56+69.2	33.3	RT		1.0
DS 9-46	57+16.5	21.6	RT		1.0
DS 9-45	57+16.6	33.3	RT		1.0
DS 3-4	57+21.5	33.5	LT		1.0
DS 9-47	57+65.9	33.3	RT		1.0
DS 3-5	57+70.5	35.7	LT	REPAIR LOCATION	
DS 9-48	58+13.6	34.7	RT		1.0
DS 9-49	58+53.7	35.7	RT		1.0
DS 3-6	58+69.5	37.7	LT		1.0
DS 9-50	59+50.7	40.6	RT		1.0
DS 9-51	59+70.9	52.1	RT		1.0
DS 9-52	59+77.6	37.9	RT		1.0
DS 4-1	59+77.9	34.9	LT		1.0
DS 9-53	59+87.0	61.9	RT		1.0
DS 9-54	60+00.5	44.3	RT		1.0
DS 9-55	60+09.8	64.5	RT		1.0
DS 9-56	60+10.8	55.0	RT		1.0
DS 4-2	60+62.5	34.2	LT		1.0
DS 9-57	60+65.4	49.4	RT		1.0
DS 9-58	61+29.4	50.0	RT		1.0
DS 4-3	61+30.6	34.1	LT		1.0
DS 4-4	61+86.7	34.0	LT		1.0
DS 9-59	62+09.0	50.2	RT		1.0

ITEM 621.04 CONTINUES ON TABLE C

TABLE C

ITEM 621.04 - CLEAN DRAINAGE STRUCTURES (EA)

STRUCTURE NUMBER	STATION	OFFSET	SIDE	COMMENTS	QTY. (EA)
TRANSIT ROAD					
DS 4-5	62+48.9	34.1	LT		1.0
DS 9-60	62+87.9	60.1	RT		1.0
DS 9-61	62+88.1	50.1	RT		1.0
DS 4-6	63+96.6	34.7	LT		1.0
DS 9-62	64+17.5	61.2	RT		1.0
DS 9-63	64+17.7	50.1	RT		1.0
DS 9-64	65+51.3	42.7	RT		1.0
DS 9-66	66+10.3	60.7	RT		1.0
DS 9-65	66+21.8	39.5	RT		1.0
DS 9-67	67+54.6	57.2	RT		1.0
DS 9-68	68+91.4	57.6	RT		1.0
DS 9-69	70+06.4	75.3	RT		1.0
DS 9-70	71+29.1	93.8	RT		1.0
DS 9-71	73+09.2	65.2	RT	REPAIR LOCATION	
DS 9-72	75+33.9	84.8	RT		1.0
DS 9-73	78+32.2	58.3	RT		1.0
DS 9-74	80+25.1	58.6	RT		1.0
DS 9-75	82+26.1	65.6	RT		1.0
DS 9-76	84+16.7	71.6	RT		1.0
DS 5-1	97+75.0	30.9	LT		1.0
DS 10-2	97+77.4	42.9	RT	REPAIR LOCATION	
DS 10-3	98+29.3	42.9	RT	REPAIR LOCATION	
DS 5-2	98+58.4	32.1	LT	NEW STRUCTURE	
DS 10-4	98+73.8	42.8	RT	REPAIR LOCATION	
DS 10-5	99+37.4	29.2	RT		1.0
DS 6-1	99+94.7	64.7	LT	REPAIR LOCATION	
DS 11-1	100+23.2	29.9	RT		1.0
R 11-2	100+38.8	40.0	RT	DS REMOVAL	
DS 11-2	100+44.0	44.2	RT	NEW STRUCTURE	
DS 6-2	100+63.3	31.0	LT	REPAIR LOCATION	
A 11-3	101+36.0	29.1	RT	REPAIR LOCATION	
DS 6-3	101+37.4	30.9	LT	REPAIR LOCATION	
DS 11-3	101+40.2	40.3	RT	NEW STRUCTURE	
A 11-4	102+16.2	29.1	RT	REPAIR LOCATION	
DS 6-4	102+17.4	31.0	LT		1.0
DS 6-5	102+18.0	44.8	LT		1.0
DS 11-4	102+20.7	36.6	RT	NEW STRUCTURE	
A 11-5	102+68.4	28.9	RT	REPAIR LOCATION	
DS 11-5	102+68.8	37.9	RT	NEW STRUCTURE	
A 11-6	104+21.3	29.0	RT	REPAIR LOCATION	
DS 11-6	104+21.3	34.6	RT	NEW STRUCTURE	
DS 11-7	104+21.4	28.6	LT	REPAIR LOCATION	
DS 11-8	106+36.0	35.0	LT	REPAIR LOCATION	
DS 11-9	106+98.9	28.6	RT	REPAIR LOCATION	
DS 11-10	107+00.5	28.9	LT	REPAIR LOCATION	
DS 11-11	109+74.6	29.1	LT	REPAIR LOCATION	
DS 11-12	109+75.4	28.6	RT	REPAIR LOCATION	
DS 11-13	112+47.1	28.8	RT	REPAIR LOCATION	
DS 11-14	113+15.1	30.8	RT	REPAIR LOCATION	
DS 15-1	113+43.4	57.1	LT	REPAIR LOCATION	
DS 11-15	113+60.8	29.6	LT		1.0
DS 11-16	115+99.3	28.8	LT	REPAIR LOCATION	
DS 11-17	115+99.8	28.5	RT		1.0
DS 11-18	118+43.4	28.7	RT		1.0
DS 11-19	118+44.6	28.7	LT	REPAIR LOCATION	
DS 11-20	121+66.5	28.9	RT		1.0
DS 11-21	121+68.1	28.6	LT	REPAIR LOCATION	
DS 11-22	123+43.5	28.8	RT	REPAIR LOCATION	
DS 11-23	123+44.0	28.7	LT	REPAIR LOCATION	
DS 11-24	124+28.8	28.5	LT	REPAIR LOCATION	
DS 7-1	124+28.9	38.4	LT		1.0
DS 11-25	124+29.9	29.0	RT	REPAIR LOCATION	
DS 7-2	124+67.0	40.3	LT		1.0
DS 7-3	126+83.8	40.1	LT		1.0
DS 7-4	128+16.9	40.4	LT		1.0
DS 7-5	129+66.5	40.5	LT		1.0
DS 8-1	132+99.8	28.4	RT	REPAIR LOCATION	
DS 8-2	133+00.7	29.3	LT		1.0
DS 8-3	135+86.3	30.4	LT		1.0
DS 8-4	135+86.6	27.2	RT	REPAIR LOCATION	
DS 8-5	139+97.4	27.5	RT	REPAIR LOCATION	
DS 8-6	139+98.8	30.1	LT		1.0
DS 8-7	143+29.0	27.5	RT	REPAIR LOCATION	

ITEM 621.04 CONTINUES ON TABLE D

TABLE D

ITEM 621.04 - CLEAN DRAINAGE STRUCTURES (EA)

STRUCTURE NUMBER	STATION	OFFSET	SIDE	COMMENTS	QTY. (EA)
TRANSIT ROAD					
DS 8-8	143+29.7	30.2	LT		1.0
DS 8-10	145+98.2	29.8	LT	REPAIR LOCATION	
DS 8-9	145+99.2	27.8	RT	REPAIR LOCATION	
DS 8-11	147+56.8	28.1	RT	REPAIR LOCATION	
DS 8-12	147+82.7	30.2	RT		1.0
DS 8-13	148+32.0	29.1	LT	REPAIR LOCATION	
DS 8-14	150+43.2	28.0	RT		1.0
DS 16-1	151+19.6	58.8	RT	REPAIR LOCATION	
DS 8-16	151+19.6	29.6	LT	REPAIR LOCATION	
DS 8-15	151+19.8	33.8	RT		1.0
DS 8-17	154+97.6	29.6	LT	REPAIR LOCATION	
DS 8-18	154+97.8	28.1	RT	REPAIR LOCATION	
DS 8-19	158+43.1	31.1	LT	REPAIR LOCATION	
DS 8-20	158+44.0	26.4	RT	REPAIR LOCATION	
DS 8-22	161+97.7	33.1	LT		1.0
DS 8-21	161+98.0	25.6	RT	REPAIR LOCATION	
DS 8-23	169+24.0	44.1	LT		1.0
DS 8-24	169+43.8	35.8	LT	REPAIR LOCATION	
DS 17-1	169+53.2	22.2	RT	REPAIR LOCATION	
DS 17-2	169+84.3	35.8	RT		1.0
A 17-3	FW 1+05.3	12.1	RT	REPAIR LOCATION	
DS 17-3	FW 1+05.9	17.3	RT	NEW STRUCTURE	
DS 8-26	FE 0+69.2	21.3	LT		1.0
DS 8-27	FE 0+70.0	17.5	RT	REPAIR LOCATION	
DS 17-4	171+43.7	19.7	RT	REPAIR LOCATION	
DS 17-6	172+45.8	29.1	LT	REPAIR LOCATION	
DS 17-5	172+45.9	13.0	RT	REPAIR LOCATION	
GENESEE STREET					
DS 12-1	G 276+87.7	30.9	LT	REPAIR LOCATION	
DS 12-2	G 278+45.6	30.9	LT	REPAIR LOCATION	
DS 12-3	G 282+37.6	33.6	LT	NEW STRUCTURE	
DS 13-1	G 282+77.0	42.9	RT	REPAIR LOCATION	
DS 12-4	G 283+35.9	36.3	LT	NEW STRUCTURE	
DS 13-2	G 283+73.3	42.8	RT	REPAIR LOCATION	
DS 12-5	G 284+16.6	41.4	LT	NEW STRUCTURE	
DS 13-3	G 284+23.6	42.9	RT	REPAIR LOCATION	
DS 12-6	G 284+50.8	43.7	LT	NEW STRUCTURE	
A 12-6	G 284+52.9	31.0	LT	REPAIR LOCATION	
DS 14-1	G 286+10.0	32.3	RT	REPAIR LOCATION	
A 5-3	G 286+36.0	29.9	LT	REPAIR LOCATION	
DS 5-3	G 286+37.2	37	LT	NEW STRUCTURE	
DS 14-2	G 286+56.4	32.2	RT	REPAIR LOCATION	
R 5-4	G 286+75.2	35.8	LT	DS REMOVAL	
DS 5-4	G 286+76.2	29.4	LT	NEW STRUCTURE	
DS 14-3	G 286+84.3	37.9	RT		1.0
DS 5-5	G 286+99.7	35.9	LT	NEW STRUCTURE	
DS 14-4	G 287+06.8	33.0	RT	REPAIR LOCATION	
DS 14-5	G 287+50.8	32.8	RT	REPAIR LOCATION	
DS 5-6	G 287+55.0	28.4	LT	NEW STRUCTURE	
DS 5-7	G 288+41.3	37.1	LT	NEW STRUCTURE	
DS 14-6	G 288+84.4	29.0	RT	REPAIR LOCATION	
DS 14-7	G 290+90.4	24.1	RT	REPAIR LOCATION	
				TOTAL:	**132**

ITEM 621.04 - END

TABLE 4

ITEM 621.03 - CLEANING CLOSED DRAINAGE SYSTEMS (LF)

STRUCTURE NUMBER	STRUCTURE NUMBER	STATION FROM	STATION TO	OFFSET FROM	OFFSET TO	COMMENTS	LENGTH (LF)
TRANSIT RD. RIGHT SIDE							
GENESEE ST. LEFT SIDE							
DS 12-1	DS 12-2	G 276+90.1	G 278+43.3	30.9	30.9		151.5
DS 12-3	DS 12-4	G 282+40.0	G 283+33.3	34.1	36.6		93.4
DS 12-4	DS 12-5	G 283+38.3	G 284+16.4	36.9	41.2		78.2
R 12-5	DS 12-5	G 284+11.7	G 284+18.6	43.4	52.3		10.3
R 12-5	DS 13-2	G 284+18.6	G 283+73.3	39.8	41.1 R		92.7
DS 12-5	DS 12-6	G 284+20.3	G 284+48.9	41.5	43.5		28.7
DS 12-6	A 12-6	G 284+51.4	G 284+52.9	41.3	32.7		8.8
		G 284+53.5	G 284+71.8	32.7	60.8		
A 12-6	DS 10-5	G 284+55.2	G 285+02.8	31.0	29.5		47.6
A 10-5	A 5-3	G 285+06.1	G 286+33.7	29.3	29.9		127.3
A 5-3	DS 5-3	G 286+35.9	G 286+37.2	31.6	34.9		3.8
DS 5-3	DS 5-4	G 286+37.7	G 286+72.7	37.0	36.1		35.0
DS 5-4	DS 5-4	G 286+76.4	G 286+75.7	26.3	33.6		7.4
DS 5-4	DS 14-3	G 286+75.7	G 286+84.2	33.6	36.3 R		70.4
DS 5-4	DS 5-5	G 286+77.7	G 286+97.2	36.1	36.2		19.5
DS 5-5	DS 5-6	G 287+02.2	G 287+52.0	36.2	36.3		49.8
DS 5-6	DS 5-7	G 287+56.5	G 288+38.7	36.3	37.2		82.5
GENESEE ST. LEFT SIDE							
DS 13-1	DS 13-2	G 282+79.3	G 283+71.0	42.9	42.9		91.7
DS 13-2	DS 13-3	G 283+75.6	G 284+21.3	42.8	42.8		45.7
DS 14-1	DS 14-2	G 286+12.4	G 286+54.0	32.3	32.3		41.7
DS 14-2	DS 14-3	G 286+58.7	G 286+82.7	32.2	37.8		24.6
DS 14-3	DS 14-5	G 286+86.0	G 287+04.5	37.5	33.2		19.0
DS 14-5	DS 14-6	G 287+09.1	G 287+48.5	33.0	32.8		39.3
DS 14-6	DS 14-7	G 287+53.1	G 288+82.1	32.8	29.0		128.7
DS 14-7	DS 14-8	G 288+86.8	G 290+88.9	28.9	24.5		201.5
						TOTAL:	**16,199.00**

ITEM 621.03 - END
SEE DWG. DTB-4 FOR TABLES 1 THRU 3

AFFIX SEAL:
ON:

ALTERED BY:
ON:

D264571
STATE OF NEW YORK
ROBERT F. SCHALLER
NO. 082465
LICENSED PROFESSIONAL ENGINEER

AS-BUILT REVISIONS
DESCRIPTION OF ALTERATIONS:

NY 78, TRANSIT ROAD, S.H. 1334A-1
FRENCH ROAD TO WEHRLE DRIVE
TOWNS OF CHEEKTOWAGA & LANCASTER
VILLAGE OF DEPEW
COUNTY: ERIE REGION: 05

PIN 5813.61
NY-78

BRIDGES

CULVERTS

ALL DIMENSIONS IN ft UNLESS OTHERWISE NOTED

DRAINAGE TABLES
DRAINAGE CLEANING

CONTRACT NUMBER
D264571

DRAWING NO. DTB-5
SHEET NO. 320

IT IS A VIOLATION OF LAW FOR ANY PERSON, UNLESS THEY ARE ACTING UNDER THE DIRECTION OF A LICENSED PROFESSIONAL ENGINEER, ARCHITECT, LANDSCAPE ARCHITECT, OR LAND SURVEYOR, TO ALTER AN ITEM IN ANY WAY. IF AN ITEM BEARING THE STAMP OF A LICENSED PROFESSIONAL IS ALTERED, THE ALTERING ENGINEER, ARCHITECT, LANDSCAPE ARCHITECT, OR LAND SURVEYOR SHALL STAMP THE DOCUMENT AND INCLUDE THE NOTATION "ALTERED BY" FOLLOWED BY THEIR SIGNATURE, THE DATE OF SUCH ALTERATION, AND A SPECIFIC DESCRIPTION OF THE ALTERATION.

NEW YORK STATE OF OPPORTUNITY. Department of Transportation

DESIGN SUPERVISOR S. S. VAIDYA
JOB MANAGER R. F. SCHALLER
DESIGN P. M. LAUGEMAN
CHECK R. F. SCHALLER
DRAFTING P. M. LAUGEMAN
CHECK C. L. CRITES
PROJECT MANAGER S. S. VAIDYA

FILE NAME = 581361_CPH_DTB_5_.dgn
DATE/TIME = 22-JUN-2021 12:50
USER = crites

ITEM 604.0705XX ALTER DRAINAGE STRUCTURE DETAILS

REFER TO DRAINAGE STRUCTURE REPAIR/ADJUST/ALTER TABLES ON DWG. DTB-3

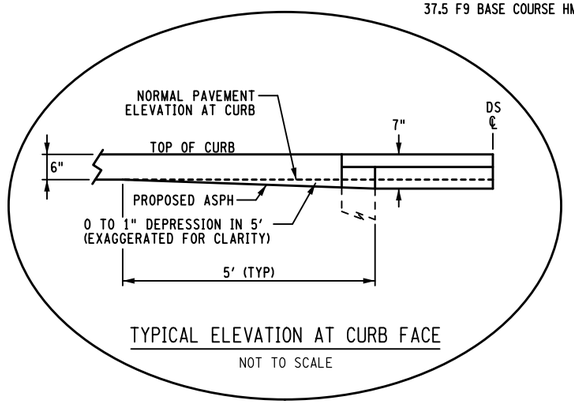

TYPICAL ELEVATION AT CURB FACE

NOT TO SCALE

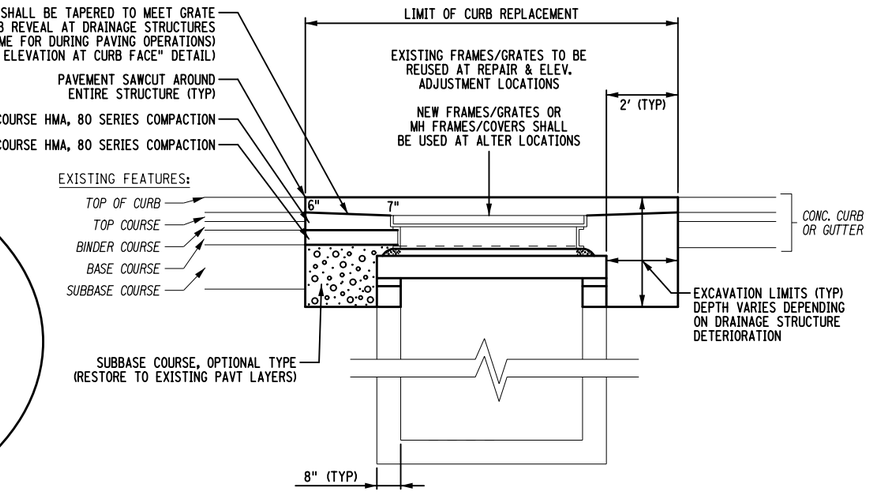

ITEM 604.0705XX
DRAINAGE STRUCTURE REPAIR DETAIL 1
ELEVATION VIEW PARALLEL TO ℄

NOT TO SCALE

NOTES:

1. THE BINDER COURSE SHALL BE PLACED WITHIN THE ROADWAY FLUSH WITH THE EXISTING GRADE, PRIOR TO MILLING OPERATIONS, AS PART OF THE DRAINAGE REPAIR AND SHALL BE INCLUDED UNDER THE RESPECTIVE 604.0705XX ITEM.
2. REFER TO DRAINAGE TABLES ON DWG. DTB-3 FOR ALL ITEM 604.0705XX LOCATIONS.
3. FOR ANY LOCATION REQUIRING ONLY A REPAIR OR ELEVATION ADJUSTMENT, THE FRAME & GRATE OR MANHOLE FRAME & COVER SHALL BE REUSED AND RESET IN PLACE.
4. STRUCTURE ALTER LOCATIONS MAY REQUIRE NEW FRAMES/GRATES OR MANHOLE FRAMES/COVERS. REFER TO THE DRAWINGS IN NOTE 2 FOR THESE LOCATIONS.

ITEM 604.0705XX - ALTER DRAINAGE STRUCTURES, LEACHING BASINS, AND MANHOLES (EACH)

(XX)	WORK TO BE COMPLETED
01	PARGE INSIDE WALLS & AROUND PIPES
02	* REPAIR/ ELEV. ADJUSTMENT/ ALTER DEPTH > 0' TO 2'
03	* REPAIR/ ELEV. ADJUSTMENT/ ALTER DEPTH > 2' TO 4'
04	* REPAIR/ ELEV. ADJUSTMENT/ ALTER DEPTH > 4'

* DEPTH OF REPAIR, ALTERATION OR ELEVATION ADJUSTMENT IS MEASURED FROM THE TOP OF THE EXISTING F&G TO THE MINIMUM DEPTH REQUIRED TO SATISFACTORILY COMPLETE THE NECESSARY REPAIR, ALTERATION OR ELEVATION ADJUSTMENT.

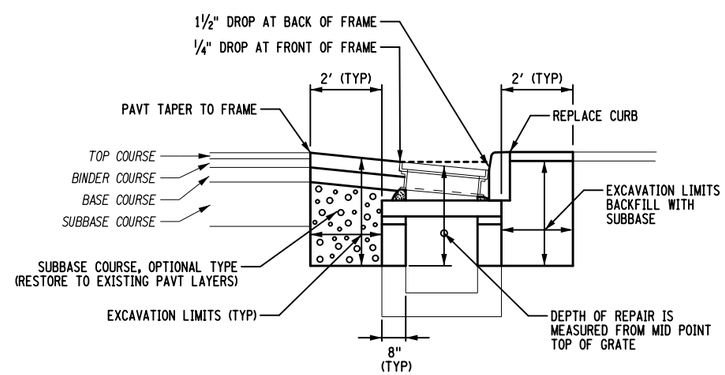

ITEM 604.0705XX
DRAINAGE STRUCTURE REPAIR DETAIL 2
ELEVATION VIEW PERPENDICULAR TO ℄

NOT TO SCALE

ITEMS 604.0705XX (01, 02, 03, 04)
ALTER DRAINAGE STRUCTURES AND MANHOLES INSTALLATION NOTES

NOTES:

1. DUE TO THE NATURE OF THIS PROJECT, THE EXACT EXTENT OF DRAINAGE STRUCTURE ALTERATION WORK CANNOT ALWAYS BE DETERMINED PRIOR TO THE COMMENCEMENT OF WORK. THESE CONTRACT DOCUMENTS HAVE BEEN PREPARED BASED ON FIELD INSPECTION OF A SAMPLE NUMBER OF DRAINAGE STRUCTURES ALONG THE ENTIRE LENGTH OF THE PROJECT. ACTUAL FIELD CONDITIONS MAY REQUIRE MODIFICATIONS TO CONSTRUCTION DETAILS AND WORK QUANTITIES.
2. ALL WORK AS DESCRIBED ON THIS SHEET AND THE FOLLOWING ITEMS AS SHOWN SHALL BE INCLUDED IN THE UNIT PRICE BID FOR ITEM 604.0705XX. FOR THE PARTICULAR WORK ITEMS INDICATED BELOW, THE ASSOCIATED NYSDOT SPECIFICATIONS: DESCRIPTION, MATERIALS, AND CONSTRUCTION DETAILS, SHALL BE REFERENCED FOR CONSTRUCTION.
   A. TRENCH & CULVERT EXCAVATION - PER ITEM 206.0201
   B. SUBBASE COURSE, OPTIONAL TYPE (MODIFIED) - PER ITEM 304.15010005
   C. DILUTED TACK COAT - PER ITEM 407.0102. (APPLY BENEATH EACH NEW LAYER OF HMA)
   D. CONCRETE FOR STRUCTURES, CLASS A - PER ITEM 555.0105
   E. 9.5 F2 TOP COURSE HMA, 60 SERIES COMPACTION - PER ITEM 402.096204
   F. 19 F9 BINDER COURSE HMA, 80 SERIES COMPACTION - PER ITEM 402.198904
   G. 37.5 F9 BASE COURSE, 80 SERIES COMPACTION - PER ITEM 402.378904
   H. CONTROLLED LOW STRENGTH MATERIAL - PER ITEM 204.01
   I. TOPSOIL (ROADSIDE) & TURF ESTABLISHMENT (LAWNS) - PER ITEMS 610.1402 & 610.1602
   J. STONE CURB, GRANITE, (TYPE C) - PER ITEM 609.0203 OR 609.15
   K. CUTTING PAVEMENT - PER ITEM 627.50140008
   L. RESETTING FRAMES AND GRATES.
   M. RESETTING CURB AND/OR CURB BOX.
3. THE CONTRACTOR SHALL PERFORM ALL WORK WITH CARE SO THAT ANY MATERIALS THAT ARE TO REMAIN IN PLACE, OR WHICH ARE TO REMAIN PROPERTY OF THE STATE, WILL NOT BE DAMAGED. IF THE CONTRACTOR DAMAGES ANY MATERIALS THAT ARE TO REMAIN IN PLACE, OR WHICH ARE TO REMAIN PROPERTY OF THE STATE, THE DAMAGED MATERIALS SHALL BE REPAIRED OR REPLACED IN A MANNER SATISFACTORY TO THE ENGINEER AT THE EXPENSE OF THE CONTRACTOR.
4. FOR DETAILS NOT SHOWN, SEE THE APPROPRIATE STANDARD SHEETS.
5. PERFORM AN INITIAL INSPECTION OF EXISTING DRAINAGE STRUCTURES TO DETERMINE DEPTH OF REPAIR A.D.B.E.
6. SAW CUT COMPLETELY AROUND DRAINAGE STRUCTURE TO LIMITS AND DEPTH SHOWN OR APPROVED BY THE E.I.C.
7. REMOVE AND INSTALL NEW CURB OR RESET EXISTING CURB/CURB BOX A.D.B.E.
8. EACH STRUCTURE SHALL BE EXCAVATED TO THE MINIMUM DEPTH REQUIRED TO REMOVE ALL OF THE EXISTING ASPHALT AND PORTLAND CEMENT CONCRETE PAVEMENT. THE CONTRACTOR SHALL BE ADVISED THAT EXCAVATION BELOW THIS ELEVATION MAY BE NECESSARY. REMOVE CONCRETE BLOCK, BRICK, OR PORTION OF PRECAST DRAINAGE STRUCTURE TO LIMITS OF DETERIORATION OR AS A.D.B.E. IF THE EXCAVATION IS LESS THAN 12" BELOW THE REQUIRED MINIMUM DEPTH, IT SHALL BE BACKFILLED WITH MATERIAL CONFORMING TO THE SPECIFICATIONS FOR ITEM 304.15010005 - SUBBASE COURSE, OPTIONAL TYPE (MODIFIED). FOR EXCAVATIONS GREATER THAN 12" BELOW THE REQUIRED MINIMUM DEPTH, THE TOP 12" SHALL BE BACKFILLED WITH MATERIAL CONFORMING TO THE SPECIFICATIONS FOR ITEM 304.15010005 AND THE REMAINING DEPTH SHALL BE BACKFILLED WITH MATERIAL CONFORMING TO THE SPECIFICATIONS FOR ITEM 204.01 - CONTROLLED LOW STRENGTH MATERIAL. THE COST OF THIS WORK SHALL BE INCLUDED IN THE UNIT PRICE BID FOR ITEM 604.0705XX.
9. REPAIR DRAINAGE STRUCTURE WITH EITHER CAST-IN-PLACE CLASS A CONCRETE, PRECAST CONCRETE ADJUSTMENT CAPS, APPROVED PRECAST CONCRETE PAVERS, OR APPROVED PRECAST CONCRETE BLOCKS, AS SHOWN ON THE DETAILS, OR A.D.B.E. REFER TO NYSDOT SECTION 704-04 FOR CONCRETE BLOCK (SLOPE PAVING), 704-13 FOR PRECAST CONCRETE DRIVEWAY AND SIDEWALK PAVERS, AND 705-21 FOR MASONRY MORTAR.
10. WHENEVER IT IS NECESSARY TO PERFORM MASONRY WORK TO ALTER A STRUCTURE, THE INTERIOR OF THE STRUCTURE SHALL BE PARGED WITH A 0.5" COAT OF MASONRY MORTAR CONFORMING TO THE MATERIAL REQUIREMENTS OF SUBSECTION 705-21, MASONRY MORTAR, OF THE STANDARD SPECIFICATIONS. THE COST OF THIS WORK SHALL BE INCLUDED IN THE UNIT PRICE BID FOR ITEM 604.0705XX.
11. FOR ALTERATIONS INVOLVING MASONRY UNITS (PRECAST CAPS OR PRECAST CONCRETE PAVERS), PARGE INTERIOR WITH 0.5" COAT OF MASONRY MORTAR MEETING THE MATERIAL REQUIREMENTS OF SPECIFICATION SECTION 705-21.
12. THE CONTRACTOR SHALL COMPLETELY PARGE AROUND ALL PIPES AT DRAINAGE STRUCTURES REQUIRING ALTERATION.
13. TACK COAT CONFORMING TO THE SPECIFICATIONS FOR ITEM 407.0102 SHALL BE APPLIED BETWEEN EACH LAYER OF PAVEMENT. THIS COST SHALL BE INCLUDED IN THE UNIT PRICE BID FOR ITEM 604.0705XX.

AFFIX SEAL:
ON:

D264571

STATE OF NEW YORK · ROBERT F. SCHALLER · NO. 082465 · LICENSED PROFESSIONAL ENGINEER

ALTERED BY:
ON:

AS-BUILT REVISIONS
DESCRIPTION OF ALTERATIONS:

NY 78, TRANSIT ROAD, S.H. 1334A-1
FRENCH ROAD TO WEHRLE DRIVE
TOWNS OF CHEEKTOWAGA & LANCASTER
VILLAGE OF DEPEW
COUNTY: ERIE REGION: 05

PIN 5813.61
NY 78

BRIDGES | CULVERTS

ALL DIMENSIONS IN ft UNLESS OTHERWISE NOTED

DRAINAGE DETAILS
DRAINAGE STRUCTURE REPAIRS

CONTRACT NUMBER D264571

DRAWING NO. DDT-1
SHEET NO. 321

IT IS A VIOLATION OF LAW FOR ANY PERSON, UNLESS THEY ARE ACTING UNDER THE DIRECTION OF A LICENSED PROFESSIONAL ENGINEER, ARCHITECT, LANDSCAPE ARCHITECT, OR LAND SURVEYOR, TO ALTER AN ITEM IN ANY WAY. IF AN ITEM BEARING THE STAMP OF A LICENSED PROFESSIONAL IS ALTERED, THE ALTERING ENGINEER, ARCHITECT, LANDSCAPE ARCHITECT, OR LAND SURVEYOR SHALL STAMP THE DOCUMENT AND INCLUDE THE NOTATION "ALTERED BY" FOLLOWED BY THEIR SIGNATURE, THE DATE OF SUCH ALTERATION, AND A SPECIFIC DESCRIPTION OF THE ALTERATION.

NEW YORK STATE OF OPPORTUNITY. Department of Transportation

DESIGN SUPERVISOR S. S. VAIDYA
JOB MANAGER R. F. SCHALLER
DESIGN C. L. CRITES
CHECK R. F. SCHALLER
DRAFTING C. L. CRITES
CHECK R. F. SCHALLER
PROJECT MANAGER S. S. VAIDYA
FILE NAME = 581361_CPH_DDT_1_.dgn
DATE/TIME = 22-JUN-2021 12:50
USER = scrites

ITEM 604.0705XX ALTER DRAINAGE STRUCTURE DETAILS

REFER TO DRAINAGE STRUCTURE REPAIR/ADJUST/ALTER TABLES ON DWG. DTB-3

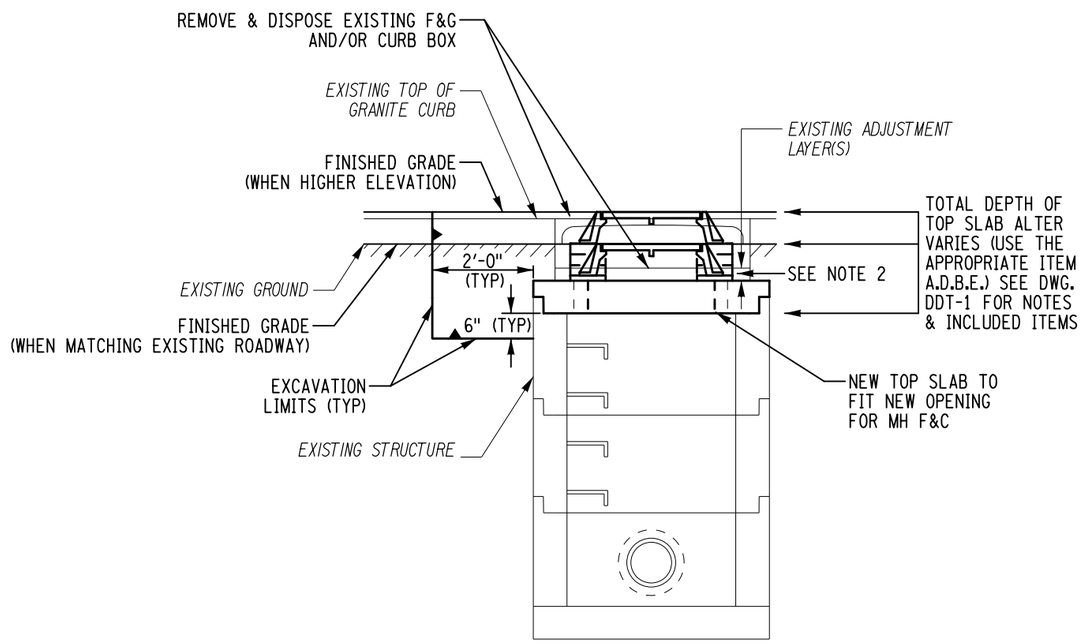

ITEM 604.0705XX
TOP SLAB ALTER DETAIL
(HIGHER ELEV. OR MATCH ROADWAY)

(NOT TO SCALE)

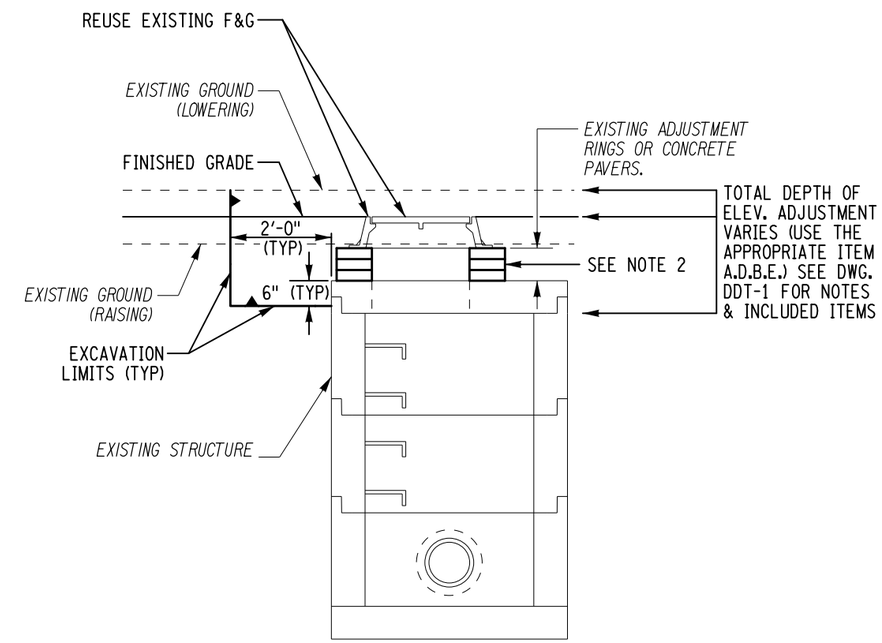

ITEM 604.0705XX
MH ELEVATION ADJUSTMENT DETAIL
(RAISE OR LOWER)

SHOWN ADJUSTED
(NOT TO SCALE)

NOTES:

1. PAY ITEM 604.0705XX SHALL INCLUDE THE COST OF ALL MATERIALS, LABOR AND EQUIPMENT NECESSARY TO SATISFACTORILY COMPLETE THE WORK INCLUDING ANY ADJUSTMENT RINGS, CONCRETE PAVERS, OR BRICKS. SEE DWG. DDT-1 FOR OTHER NOTES AND INCLUDED ITEMS.
2. MINOR ADJUSTMENTS OF MANHOLE FRAMES AND COVERS MAY BE MADE BY THE REMOVAL OF EXISTING BRICK OR ADJUSTMENT RINGS, OR THE ADDITION OF NEW CONCRETE PAVERS OR ADJUSTMENT RINGS. FINAL DETERMINATION WILL BE MADE BY THE ENGINEER IN CHARGE.
3. SEE ITEM 604.0705XX TABLES ON DWG. DTB-3 FOR LOCATIONS.

AFFIX SEAL: ON:

ALTERED BY: ON:

D264571

STATE OF NEW YORK · ROBERT F. SCHALLER · NO. 082465 · LICENSED PROFESSIONAL ENGINEER

AS-BUILT REVISIONS
DESCRIPTION OF ALTERATIONS:

NY 78, TRANSIT ROAD, S.H. 1334A-1	PIN 5813.61	BRIDGES	CULVERTS	ALL DIMENSIONS IN ft UNLESS OTHERWISE NOTED
FRENCH ROAD TO WEHRLE DRIVE	NY 78			DRAINAGE DETAILS
TOWNS OF CHEEKTOWAGA & LANCASTER				ALTER TOP SLAB (FOR MH) / ADJ ELEV.
VILLAGE OF DEPEW				
COUNTY: ERIE REGION: 05				

CONTRACT NUMBER D264571

DRAWING NO. DDT-2

SHEET NO. 322

IT IS A VIOLATION OF LAW FOR ANY PERSON, UNLESS THEY ARE ACTING UNDER THE DIRECTION OF A LICENSED PROFESSIONAL ENGINEER, ARCHITECT, LANDSCAPE ARCHITECT, OR LAND SURVEYOR, TO ALTER AN ITEM IN ANY WAY. IF AN ITEM BEARING THE STAMP OF A LICENSED PROFESSIONAL IS ALTERED, THE ALTERING ENGINEER, ARCHITECT, LANDSCAPE ARCHITECT, OR LAND SURVEYOR SHALL STAMP THE DOCUMENT AND INCLUDE THE NOTATION "ALTERED BY" FOLLOWED BY THEIR SIGNATURE, THE DATE OF SUCH ALTERATION, AND A SPECIFIC DESCRIPTION OF THE ALTERATION.

NEW YORK STATE OF OPPORTUNITY. Department of Transportation

PROJECT MANAGER S. S. VAIDYA
CHECK R. F. SCHALLER
DRAFTING C. L. CRITES
CHECK R. F. SCHALLER
DESIGN C. L. CRITES
JOB MANAGER R. F. SCHALLER
DESIGN SUPERVISOR S. S. VAIDYA
FILE NAME = 581361_CPH_DDT_2_.dgn
DATE/TIME = 22-JUN-2021 12:50
USER = cc1tes

ITEM 604.0705XX ALTER DRAINAGE STRUCTURE DETAILS

REFER TO DRAINAGE STRUCTURE REPAIR/ADJUST/ALTER TABLES ON DWG. DTB-3

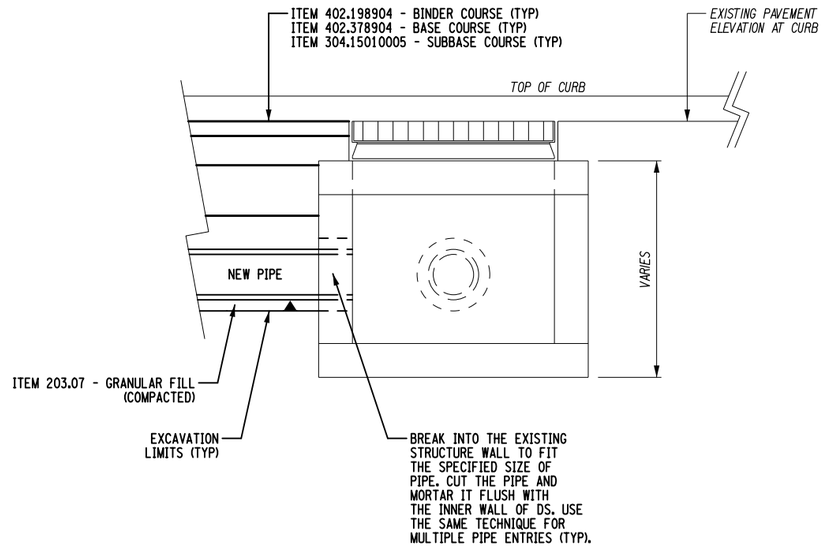

TAP-IN DETAIL
LONGITUDINAL SECTION

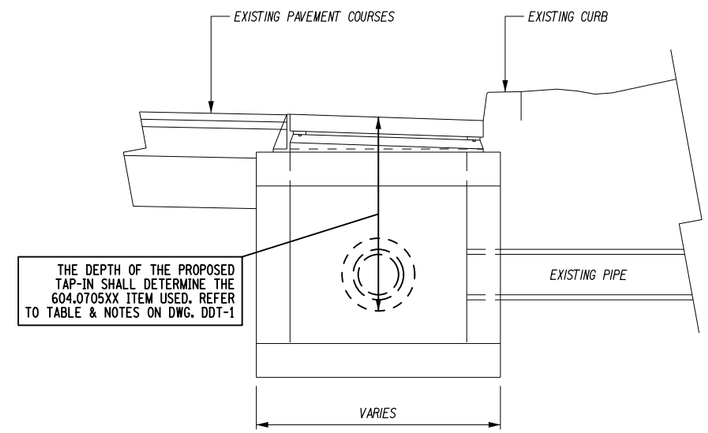

TAP-IN DETAIL
TRANSVERSE SECTION

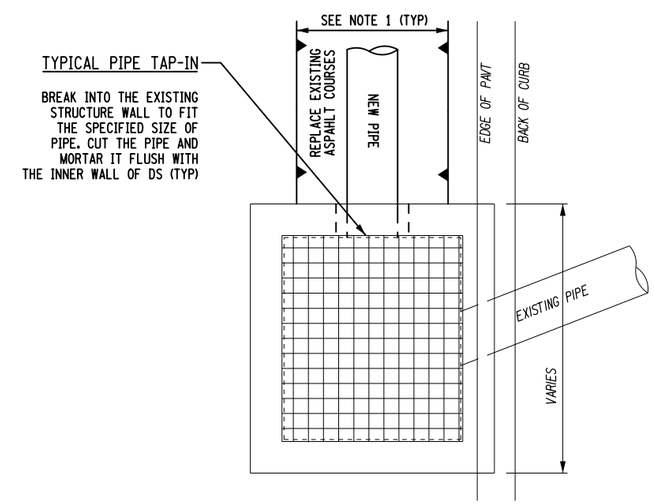

TAP-IN DETAIL
PLAN

NOTES:

1. SEE 203 STANDARD SHEETS FOR LIMITS.
2. BREAK INTO AND INSERT PIPE INTO AN EXSTING DRAINAGE STRUCTURE. AT BRICK STRUCTURES, THE CONTRACTOR SHALL INSTALL A STEEL ANGLE HEADER PRIOR TO REMOVING BRICKS FOR PIPE TO PREVENT COLLAPSING OF THE BRICKS ABOVE. THE HEADER SHALL BE LEFT IN PLACE.
3. SEE DWG. DDT-1 FOR ALTER DRAINAGE STRUCTURES AND MANHOLE NOTES.

AFFIX SEAL: ON:	ALTERED BY: ON:
D264571 STATE OF NEW YORK ROBERT F. SCHALLER NO. 082465 LICENSED PROFESSIONAL ENGINEER	

AS-BUILT REVISIONS
DESCRIPTION OF ALTERATIONS:

NY 78, TRANSIT ROAD, S.H. 1334A-1	PIN 5813.61	BRIDGES	CULVERTS	ALL DIMENSIONS IN ft UNLESS OTHERWISE NOTED
FRENCH ROAD TO WEHRLE DRIVE	NY 78			ALTER TOP SLAB (FOR MH) / ADJ ELEV.
TOWNS OF CHEEKTOWAGA & LANCASTER	UTILITY QUALITY LEVEL D			
VILLAGE OF DEPEW				
COUNTY: ERIE REGION: 05				

CONTRACT NUMBER D264571

DRAWING NO. DDT-3

SHEET NO. 323

IT IS A VIOLATION OF LAW FOR ANY PERSON, UNLESS THEY ARE ACTING UNDER THE DIRECTION OF A LICENSED PROFESSIONAL ENGINEER, ARCHITECT, LANDSCAPE ARCHITECT, OR LAND SURVEYOR, TO ALTER AN ITEM IN ANY WAY. IF AN ITEM BEARING THE STAMP OF A LICENSED PROFESSIONAL IS ALTERED, THE ALTERING ENGINEER, ARCHITECT, LANDSCAPE ARCHITECT, OR LAND SURVEYOR SHALL STAMP THE DOCUMENT AND INCLUDE THE NOTATION "ALTERED BY" FOLLOWED BY THEIR SIGNATURE, THE DATE OF SUCH ALTERATION, AND A SPECIFIC DESCRIPTION OF THE ALTERATION.

NEW YORK STATE OF OPPORTUNITY. Department of Transportation

PROJECT MANAGER S. S. VAIDYA
CHECK R. F. SCHALLER
DRAFTING C. L. CRITES
CHECK R. F. SCHALLER
DESIGN C. L. CRITES
JOB MANAGER R. F. SCHALLER
DESIGN SUPERVISOR S. S. VAIDYA
FILE NAME = 581361_CPH_DDT_3_.dgn
DATE/TIME = 22-JUN-2021 12:50
USER = cc rites

PROJECT MANAGER S. S. VAIDYA
CHECK R. F. SCHALLER
DRAFTING C. L. CRITES
CHECK R. F. SCHALLER
DESIGN C. L. CRITES
JOB MANAGER R. F. SCHALLER
DESIGN SUPERVISOR S. S. VAIDYA

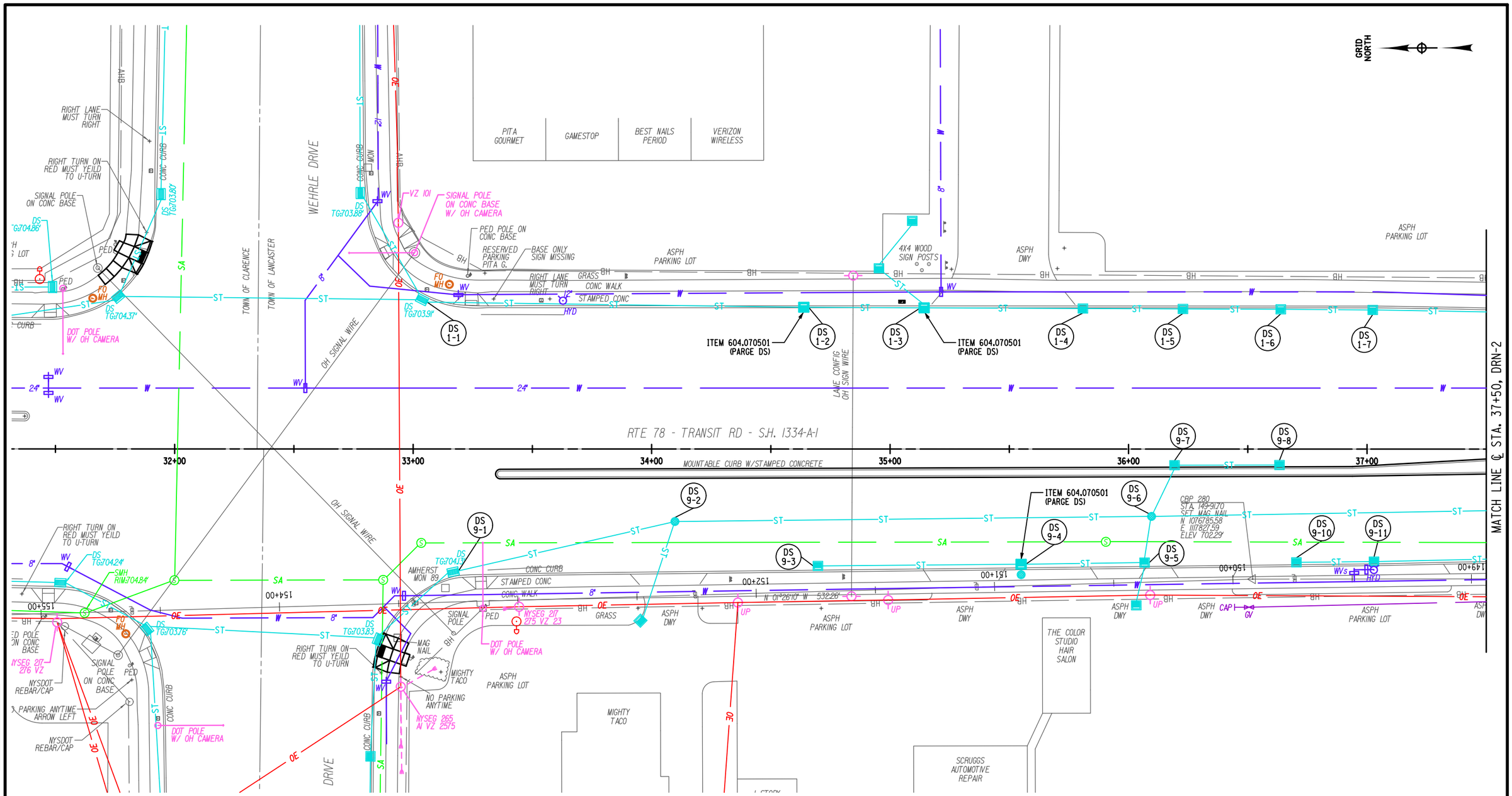

20 0 20 40 60 80'
1" = 40'

NOTES:

1. REFER TO DWGS.DTB-1 TO DTB-2 FOR PROPOSED DRAINAGE TABLE.
2. REFER TO DWG.DTB-3 FOR DRAINAGE REPAIR/ALTER TABLES.
3. REFER TO DWGS.DDT-1 TO DDT-3 FOR DRAINAGE DETAILS.

AFFIX SEAL:
ON:

ALTERED BY:
ON:

D264571
STATE OF NEW YORK
ROBERT F. SCHALLER
NO. 082465
LICENSED PROFESSIONAL ENGINEER

AS-BUILT REVISIONS
DESCRIPTION OF ALTERATIONS:

NY 78, TRANSIT ROAD, S.H. 1334A-1
FRENCH ROAD TO WEHRLE DRIVE
TOWNS OF CHEEKTOWAGA & LANCASTER
VILLAGE OF DEPEW
COUNTY: ERIE REGION: 05

PIN 5813.61
NY 78
UTILITY QUALITY LEVEL D

BRIDGES

CULVERTS

ALL DIMENSIONS IN ft UNLESS OTHERWISE NOTED

DRAINAGE PLANS
STA. 32+31.85 TO STA. 37+50

CONTRACT NUMBER
D264571

DRAWING NO. DRN-1
SHEET NO. 324

IT IS A VIOLATION OF LAW FOR ANY PERSON, UNLESS THEY ARE ACTING UNDER THE DIRECTION OF A LICENSED PROFESSIONAL ENGINEER, ARCHITECT, LANDSCAPE ARCHITECT, OR LAND SURVEYOR, TO ALTER AN ITEM IN ANY WAY. IF AN ITEM BEARING THE STAMP OF A LICENSED PROFESSIONAL IS ALTERED, THE ALTERING ENGINEER, ARCHITECT, LANDSCAPE ARCHITECT, OR LAND SURVEYOR SHALL STAMP THE DOCUMENT AND INCLUDE THE NOTATION "ALTERED BY" FOLLOWED BY THEIR SIGNATURE, THE DATE OF SUCH ALTERATION, AND A SPECIFIC DESCRIPTION OF THE ALTERATION.

NEW YORK STATE OF OPPORTUNITY. Department of Transportation

FILE NAME = 581361_CPH_HWY_DRN-1.dgn
DATE/TIME = 22-JUN-2021 12:50
USER = ccrites

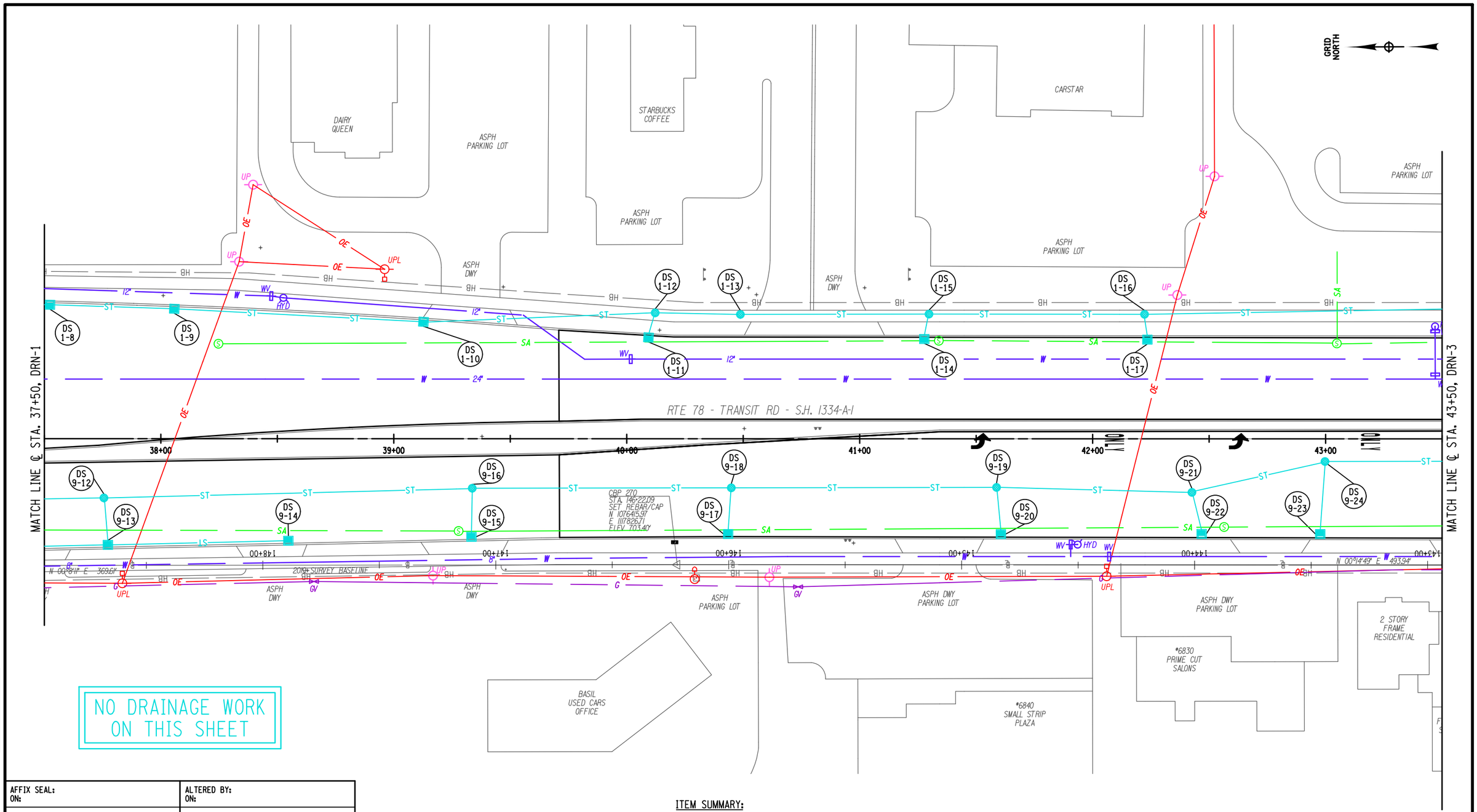

20 0 20 40 60 80'

1" = 40'

ITEM SUMMARY:

1. REFER TO DWGS. DTB-1 TO DTB-2 FOR PROPOSED DRAINAGE TABLE.
2. REFER TO DWG. DTB-3 FOR DRAINAGE REPAIR/ALTER TABLES.
3. REFER TO DWGS. DDT-1 TO DDT-3 FOR DRAINAGE DETAILS.

AFFIX SEAL:
ON:

ALTERED BY:
ON:

D264571
STATE OF NEW YORK
ROBERT F. SCHALLER
NO. 082465
LICENSED PROFESSIONAL ENGINEER

AS-BUILT REVISIONS
DESCRIPTION OF ALTERATIONS:

NY 78, TRANSIT ROAD, S.H. 1334A-1
FRENCH ROAD TO WEHRLE DRIVE
TOWNS OF CHEEKTOWAGA & LANCASTER
VILLAGE OF DEPEW
COUNTY: ERIE REGION: 05

PIN 5813.61
NY 78
UTILITY QUALITY LEVEL D

BRIDGES

CULVERTS

ALL DIMENSIONS IN ft UNLESS OTHERWISE NOTED

DRAINAGE PLANS
STA. 37+50 TO STA. 43+50

CONTRACT NUMBER
D264571

DRAWING NO. DRN-2
SHEET NO. 325

IT IS A VIOLATION OF LAW FOR ANY PERSON, UNLESS THEY ARE ACTING UNDER THE DIRECTION OF A LICENSED PROFESSIONAL ENGINEER, ARCHITECT, LANDSCAPE ARCHITECT, OR LAND SURVEYOR, TO ALTER AN ITEM IN ANY WAY. IF AN ITEM BEARING THE STAMP OF A LICENSED PROFESSIONAL IS ALTERED, THE ALTERING ENGINEER, ARCHITECT, LANDSCAPE ARCHITECT, OR LAND SURVEYOR SHALL STAMP THE DOCUMENT AND INCLUDE THE NOTATION "ALTERED BY" FOLLOWED BY THEIR SIGNATURE, THE DATE OF SUCH ALTERATION, AND A SPECIFIC DESCRIPTION OF THE ALTERATION.

NEW YORK STATE OF OPPORTUNITY. Department of Transportation

PROJECT MANAGER S. S. VAIDYA
CHECK R. F. SCHALLER
DRAFTING C. L. CRITES
DESIGN C. L. CRITES
JOB MANAGER R. F. SCHALLER
DESIGN SUPERVISOR S. S. VAIDYA

FILE NAME = 581361_CPH_HWY_DRN-2.dgn
DATE/TIME = 22-JUN-2021 12:50
USER = cortes

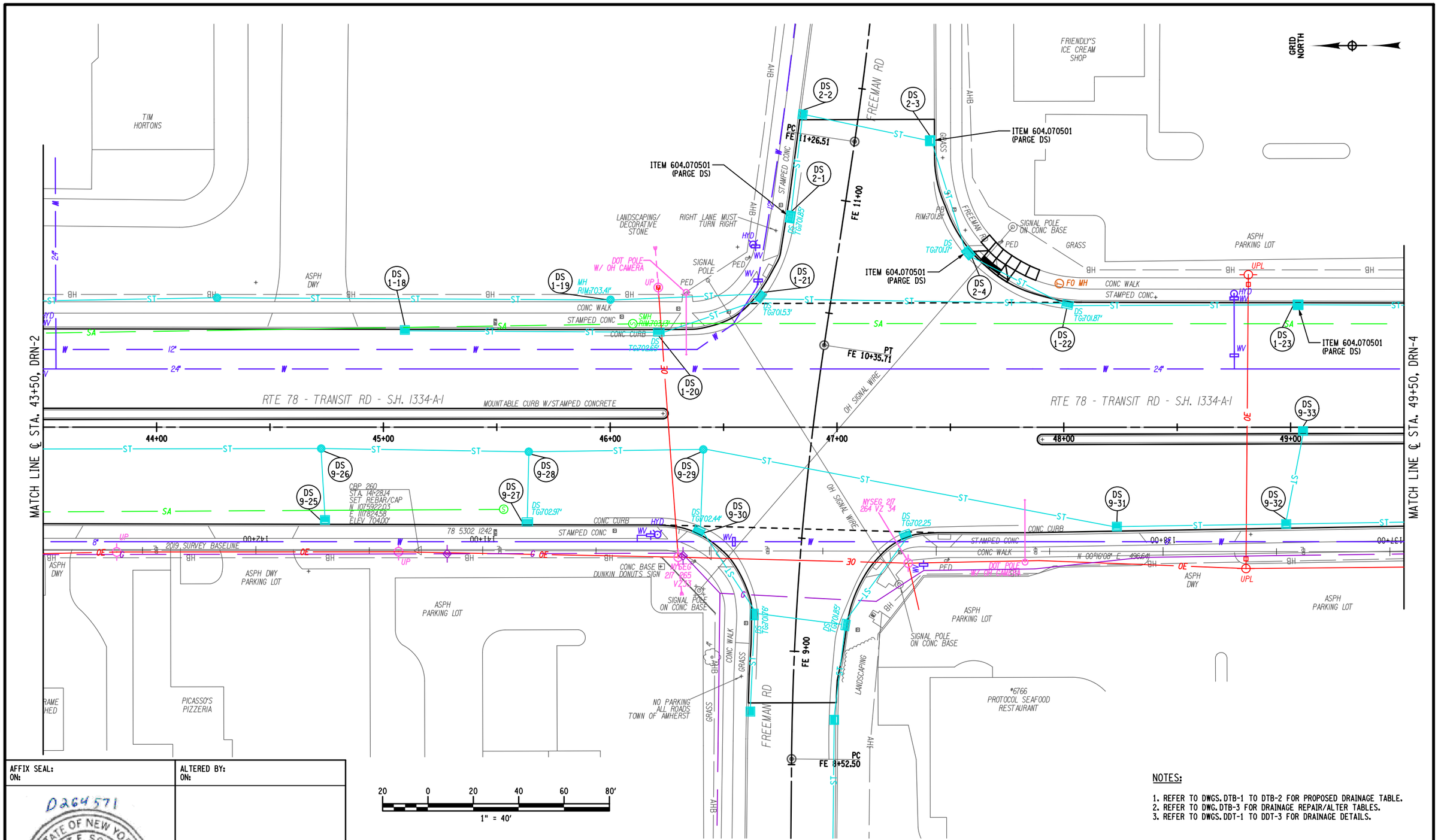

NOTES:

1. REFER TO DWGS. DTB-1 TO DTB-2 FOR PROPOSED DRAINAGE TABLE.
2. REFER TO DWG. DTB-3 FOR DRAINAGE REPAIR/ALTER TABLES.
3. REFER TO DWGS. DDT-1 TO DDT-3 FOR DRAINAGE DETAILS.

AFFIX SEAL: ON:

ALTERED BY: ON:

D264571

STATE OF NEW YORK · ROBERT F. SCHALLER · NO. 082465 · LICENSED PROFESSIONAL ENGINEER

AS-BUILT REVISIONS
DESCRIPTION OF ALTERATIONS:

NY 78, TRANSIT ROAD, S.H. 1334A-1
FRENCH ROAD TO WEHRLE DRIVE
TOWNS OF CHEEKTOWAGA & LANCASTER
VILLAGE OF DEPEW
COUNTY: ERIE REGION: 05

PIN 5813.61
NY 78
UTILITY QUALITY LEVEL D

BRIDGES

CULVERTS

ALL DIMENSIONS IN ft UNLESS OTHERWISE NOTED

GENERAL PLANS
STA. 43+50 TO STA. 49+50

CONTRACT NUMBER D264571

DRAWING NO. DRN-3
SHEET NO. 326

IT IS A VIOLATION OF LAW FOR ANY PERSON, UNLESS THEY ARE ACTING UNDER THE DIRECTION OF A LICENSED PROFESSIONAL ENGINEER, ARCHITECT, LANDSCAPE ARCHITECT, OR LAND SURVEYOR, TO ALTER AN ITEM IN ANY WAY. IF AN ITEM BEARING THE STAMP OF A LICENSED PROFESSIONAL IS ALTERED, THE ALTERING ENGINEER, ARCHITECT, LANDSCAPE ARCHITECT, OR LAND SURVEYOR SHALL STAMP THE DOCUMENT AND INCLUDE THE NOTATION "ALTERED BY" FOLLOWED BY THEIR SIGNATURE, THE DATE OF SUCH ALTERATION, AND A SPECIFIC DESCRIPTION OF THE ALTERATION.

NEW YORK STATE OF OPPORTUNITY. Department of Transportation

PROJECT MANAGER S. S. VAIDYA
CHECK R. F. SCHALLER
DRAFTING C. L. CRITES
DESIGN C. L. CRITES
JOB MANAGER R. F. SCHALLER
DESIGN SUPERVISOR S. S. VAIDYA

FILE NAME = 581361_CPH_HWY_DRN-3.dgn
DATE/TIME = 22-JUN-2021 12:51
USER = cc rites

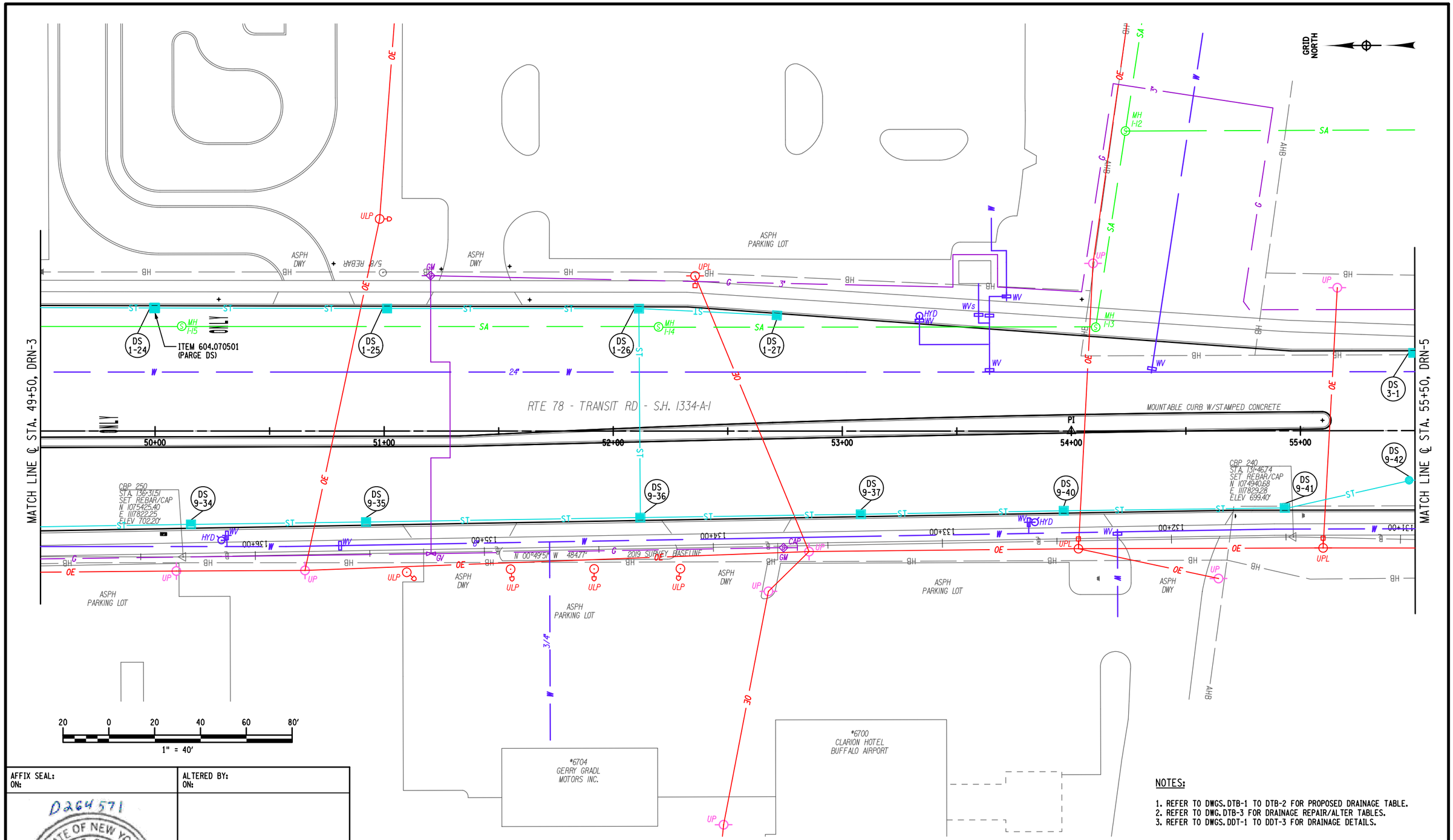

NOTES:

1. REFER TO DWGS. DTB-1 TO DTB-2 FOR PROPOSED DRAINAGE TABLE.
2. REFER TO DWG. DTB-3 FOR DRAINAGE REPAIR/ALTER TABLES.
3. REFER TO DWGS. DDT-1 TO DDT-3 FOR DRAINAGE DETAILS.

AFFIX SEAL:
ON:

D264571
STATE OF NEW YORK
ROBERT F. SCHALLER
NO. 082465
LICENSED PROFESSIONAL ENGINEER

ALTERED BY:
ON:

AS-BUILT REVISIONS
DESCRIPTION OF ALTERATIONS:

NY 78, TRANSIT ROAD, S.H. 1334A-1	PIN 5813.61	BRIDGES	CULVERTS	ALL DIMENSIONS IN ft UNLESS OTHERWISE NOTED
FRENCH ROAD TO WEHRLE DRIVE	NY 78			DRAINAGE PLANS
TOWNS OF CHEEKTOWAGA & LANCASTER	UTILITY QUALITY LEVEL D			STA. 49+50 TO STA. 55+50
VILLAGE OF DEPEW				
COUNTY: ERIE REGION: 05				

CONTRACT NUMBER
D264571

DRAWING NO. DRN-4
SHEET NO. 327

IT IS A VIOLATION OF LAW FOR ANY PERSON, UNLESS THEY ARE ACTING UNDER THE DIRECTION OF A LICENSED PROFESSIONAL ENGINEER, ARCHITECT, LANDSCAPE ARCHITECT, OR LAND SURVEYOR, TO ALTER AN ITEM IN ANY WAY. IF AN ITEM BEARING THE STAMP OF A LICENSED PROFESSIONAL IS ALTERED, THE ALTERING ENGINEER, ARCHITECT, LANDSCAPE ARCHITECT, OR LAND SURVEYOR SHALL STAMP THE DOCUMENT AND INCLUDE THE NOTATION "ALTERED BY" FOLLOWED BY THEIR SIGNATURE, THE DATE OF SUCH ALTERATION, AND A SPECIFIC DESCRIPTION OF THE ALTERATION.

NEW YORK STATE OF OPPORTUNITY. Department of Transportation

PROJECT MANAGER S. S. VAIDYA
CHECK R. F. SCHALLER
DRAFTING C. L. CRITES
CHECK R. F. SCHALLER
DESIGN C. L. CRITES
JOB MANAGER R. F. SCHALLER
DESIGN SUPERVISOR S. S. VAIDYA

FILE NAME = 581361_CPH_HWY_DRN-4.dgn
DATE/TIME = 22-JUN-2021 12:51
USER = cortes

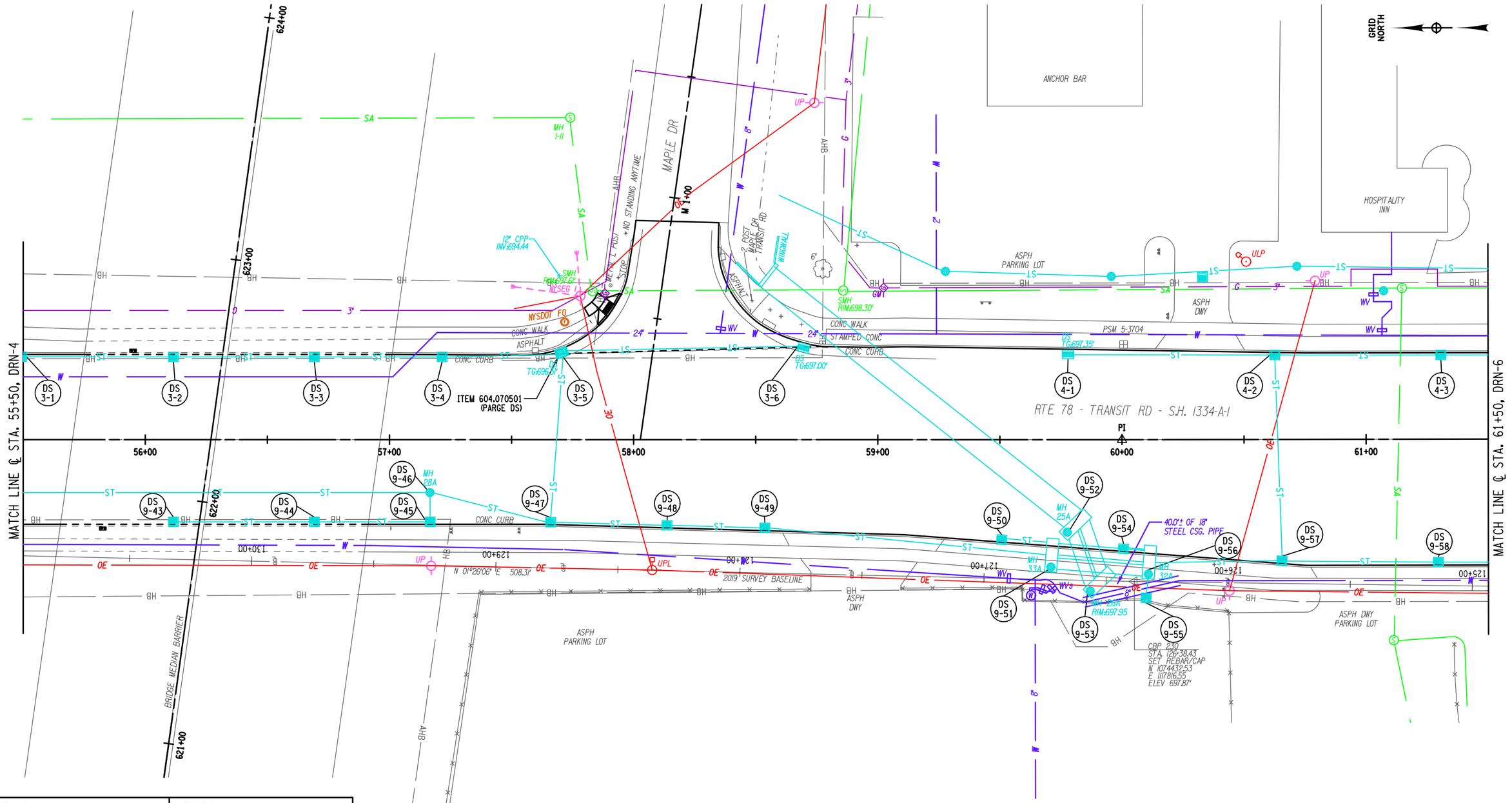

NOTES:

1. REFER TO DWGS. DTB-1 TO DTB-2 FOR PROPOSED DRAINAGE TABLE.
2. REFER TO DWG. DTB-3 FOR DRAINAGE REPAIR/ALTER TABLES.
3. REFER TO DWGS. DDT-1 TO DDT-3 FOR DRAINAGE DETAILS.

AFFIX SEAL:
ON:

ALTERED BY:
ON:

D264571
STATE OF NEW YORK
ROBERT F. SCHALLER
NO. 082465
LICENSED PROFESSIONAL ENGINEER

AS-BUILT REVISIONS
DESCRIPTION OF ALTERATIONS:

NY 78, TRANSIT ROAD, S.H. 1334A-1
FRENCH ROAD TO WEHRLE DRIVE
TOWNS OF CHEEKTOWAGA & LANCASTER
VILLAGE OF DEPEW
COUNTY: ERIE REGION: 05

PIN 5813.61
NY 78
UTILITY QUALITY LEVEL D

BRIDGES

CULVERTS

ALL DIMENSIONS IN ft UNLESS OTHERWISE NOTED

DRAINAGE PLANS
STA. 55+50 TO STA. 61+50

CONTRACT NUMBER
D264571

DRAWING NO. DRN-5
SHEET NO. 328

IT IS A VIOLATION OF LAW FOR ANY PERSON, UNLESS THEY ARE ACTING UNDER THE DIRECTION OF A LICENSED PROFESSIONAL ENGINEER, ARCHITECT, LANDSCAPE ARCHITECT, OR LAND SURVEYOR, TO ALTER AN ITEM IN ANY WAY. IF AN ITEM BEARING THE STAMP OF A LICENSED PROFESSIONAL IS ALTERED, THE ALTERING ENGINEER, ARCHITECT, LANDSCAPE ARCHITECT, OR LAND SURVEYOR SHALL STAMP THE DOCUMENT AND INCLUDE THE NOTATION "ALTERED BY" FOLLOWED BY THEIR SIGNATURE, THE DATE OF SUCH ALTERATION, AND A SPECIFIC DESCRIPTION OF THE ALTERATION.

NEW YORK STATE OF OPPORTUNITY. Department of Transportation

PROJECT MANAGER S. S. VAIDYA
CHECK R. F. SCHALLER
DRAFTING C. L. CRITES
DESIGN C. L. CRITES
JOB MANAGER R. F. SCHALLER
DESIGN SUPERVISOR S. S. VAIDYA

FILE NAME = 581361_CPH_HWY_DRN-5.dgn
DATE/TIME = 22-JUN-2021 12:51
USER = cortes

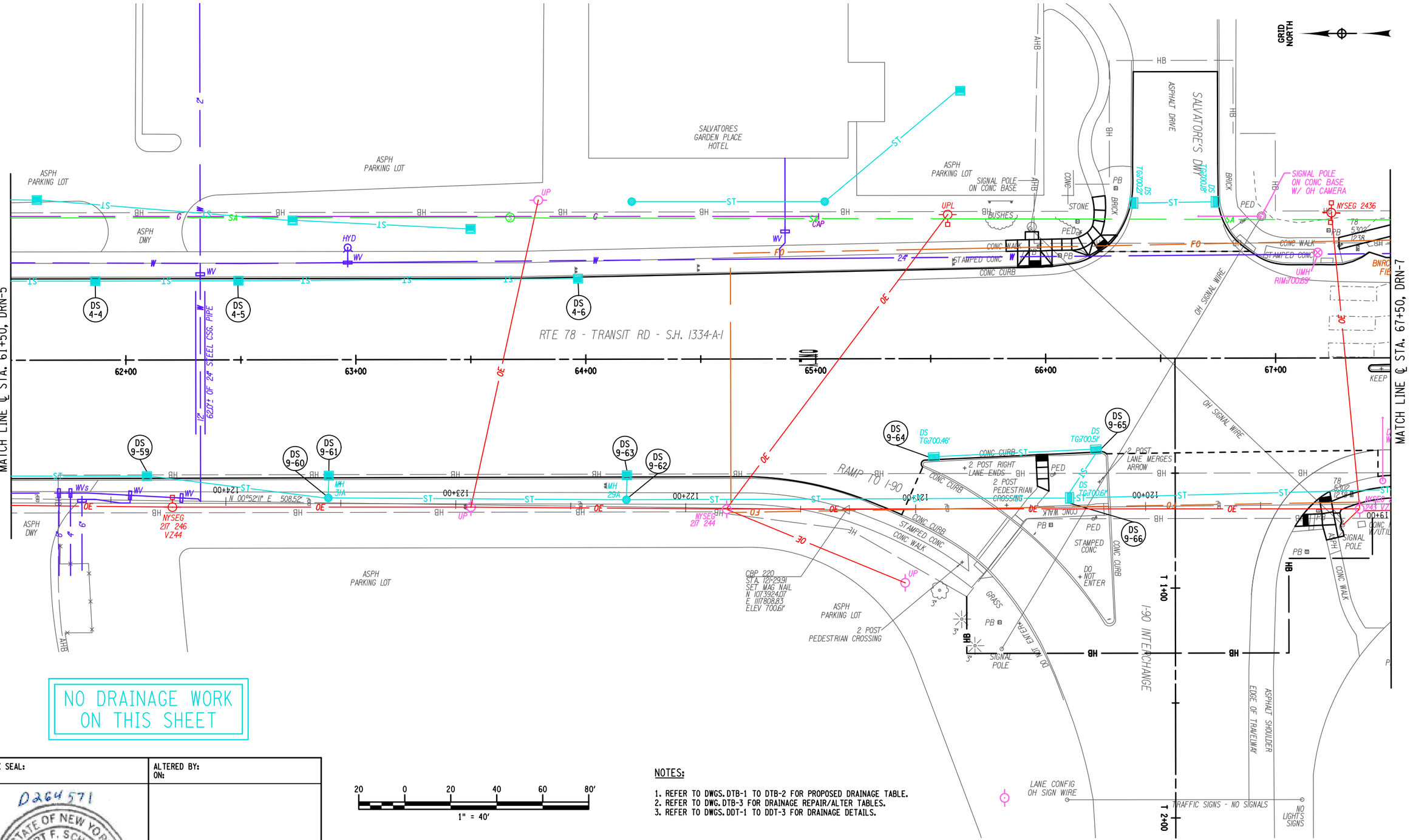

NO DRAINAGE WORK ON THIS SHEET

20 0 20 40 60 80'
1" = 40'

NOTES:

1. REFER TO DWGS. DTB-1 TO DTB-2 FOR PROPOSED DRAINAGE TABLE.
2. REFER TO DWG. DTB-3 FOR DRAINAGE REPAIR/ALTER TABLES.
3. REFER TO DWGS. DDT-1 TO DDT-3 FOR DRAINAGE DETAILS.

AFFIX SEAL:
ON:

ALTERED BY:
ON:

D264571
STATE OF NEW YORK
ROBERT F. SCHALLER
LICENSED PROFESSIONAL ENGINEER
NO. 082465

AS-BUILT REVISIONS
DESCRIPTION OF ALTERATIONS:

NY 78, TRANSIT ROAD, S.H. 1334A-1
FRENCH ROAD TO WEHRLE DRIVE
TOWNS OF CHEEKTOWAGA & LANCASTER
VILLAGE OF DEPEW
COUNTY: ERIE REGION: 05

PIN 5813.61
NY 78
UTILITY QUALITY LEVEL D

BRIDGES

CULVERTS

ALL DIMENSIONS IN ft UNLESS OTHERWISE NOTED

GENERAL PLANS
STA. 61+50 TO 67+50

CONTRACT NUMBER
D264571

DRAWING NO. DRN-6
SHEET NO. 329

IT IS A VIOLATION OF LAW FOR ANY PERSON, UNLESS THEY ARE ACTING UNDER THE DIRECTION OF A LICENSED PROFESSIONAL ENGINEER, ARCHITECT, LANDSCAPE ARCHITECT, OR LAND SURVEYOR, TO ALTER AN ITEM IN ANY WAY. IF AN ITEM BEARING THE STAMP OF A LICENSED PROFESSIONAL IS ALTERED, THE ALTERING ENGINEER, ARCHITECT, LANDSCAPE ARCHITECT, OR LAND SURVEYOR SHALL STAMP THE DOCUMENT AND INCLUDE THE NOTATION "ALTERED BY" FOLLOWED BY THEIR SIGNATURE, THE DATE OF SUCH ALTERATION, AND A SPECIFIC DESCRIPTION OF THE ALTERATION.

NEW YORK STATE OF OPPORTUNITY. Department of Transportation

PROJECT MANAGER S. S. VAIDYA
CHECK R. F. SCHALLER
DRAFTING C. L. CRITES
DESIGN C. L. CRITES
JOB MANAGER R. F. SCHALLER
DESIGN SUPERVISOR S. S. VAIDYA

FILE NAME = 581361_CPH_HWY_DRN-6.dgn
DATE/TIME = 22-JUN-2021 12:51
USER = cortes

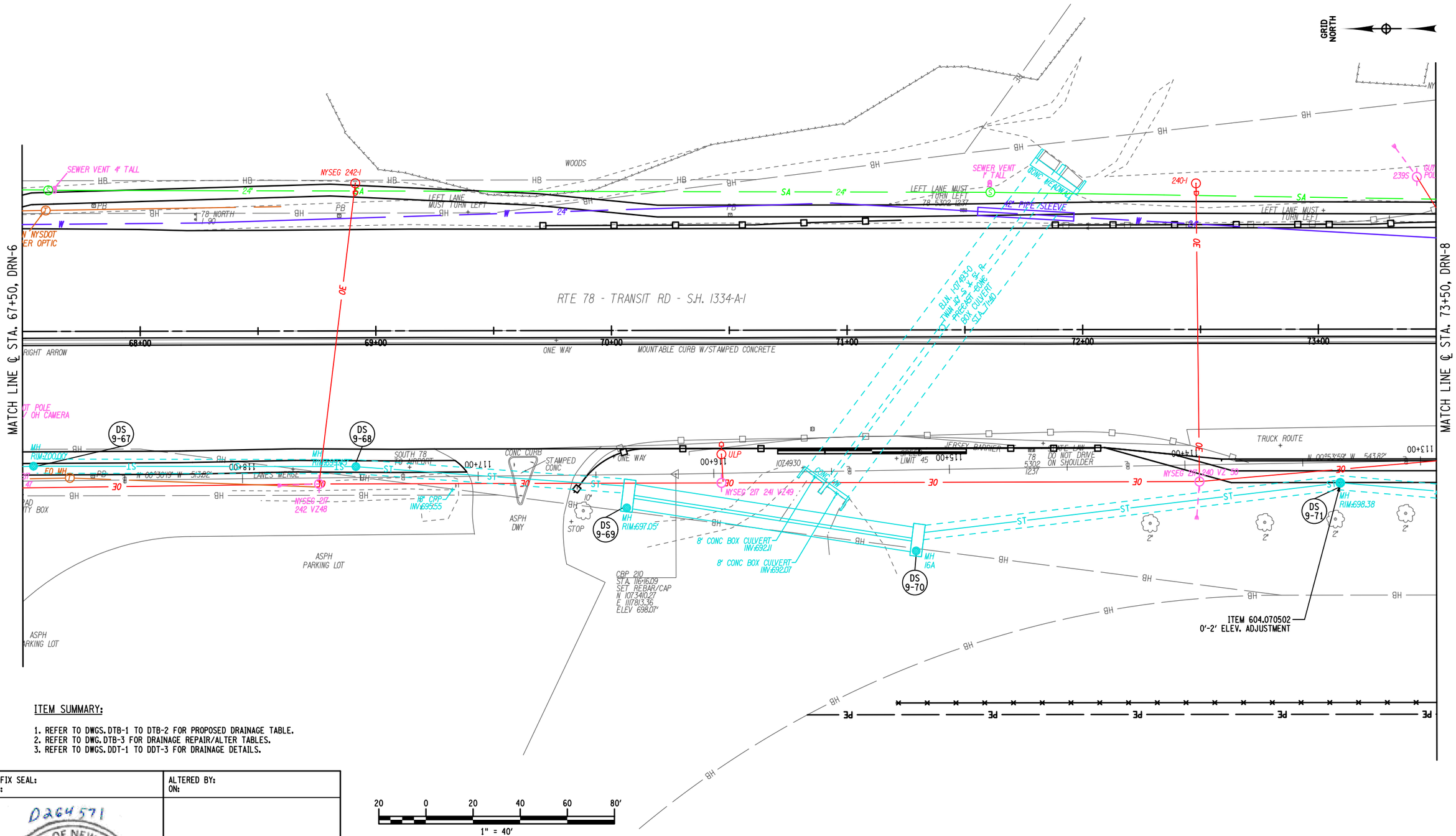

ITEM SUMMARY:

1. REFER TO DWGS.DTB-1 TO DTB-2 FOR PROPOSED DRAINAGE TABLE.
2. REFER TO DWG.DTB-3 FOR DRAINAGE REPAIR/ALTER TABLES.
3. REFER TO DWGS.DDT-1 TO DDT-3 FOR DRAINAGE DETAILS.

AFFIX SEAL: ON:	ALTERED BY: ON:
D264571 STATE OF NEW YORK ROBERT F. SCHALLER LICENSED PROFESSIONAL ENGINEER NO. 082465	

AS-BUILT REVISIONS DESCRIPTION OF ALTERATIONS:	NY 78, TRANSIT ROAD, S.H. 1334A-1	PIN 5813.61 NY 78 UTILITY QUALITY LEVEL D	BRIDGES	CULVERTS	ALL DIMENSIONS IN ft UNLESS OTHERWISE NOTED	CONTRACT NUMBER D264571
	FRENCH ROAD TO WEHRLE DRIVE				DRAINAGE PLANS STA. 67+50 TO STA. 73+50	
	TOWNS OF CHEEKTOWAGA & LANCASTER					DRAWING NO. DRN-7
	VILLAGE OF DEPEW					SHEET NO. 330
	COUNTY: ERIE REGION: 05					

IT IS A VIOLATION OF LAW FOR ANY PERSON, UNLESS THEY ARE ACTING UNDER THE DIRECTION OF A LICENSED PROFESSIONAL ENGINEER, ARCHITECT, LANDSCAPE ARCHITECT, OR LAND SURVEYOR, TO ALTER AN ITEM IN ANY WAY. IF AN ITEM BEARING THE STAMP OF A LICENSED PROFESSIONAL IS ALTERED, THE ALTERING ENGINEER, ARCHITECT, LANDSCAPE ARCHITECT, OR LAND SURVEYOR SHALL STAMP THE DOCUMENT AND INCLUDE THE NOTATION "ALTERED BY" FOLLOWED BY THEIR SIGNATURE, THE DATE OF SUCH ALTERATION, AND A SPECIFIC DESCRIPTION OF THE ALTERATION.

NEW YORK STATE OF OPPORTUNITY. Department of Transportation

PROJECT MANAGER S. S. VAIDYA
CHECK R. F. SCHALLER
DRAFTING C. L. CRITES
CHECK R. F. SCHALLER
DESIGN C. L. CRITES
JOB MANAGER R. F. SCHALLER
DESIGN SUPERVISOR S. S. VAIDYA
FILE NAME = 581361_CPH_HWY_DRN-7.dgn
DATE/TIME = 22-JUN-2021 12:51
USER = corites

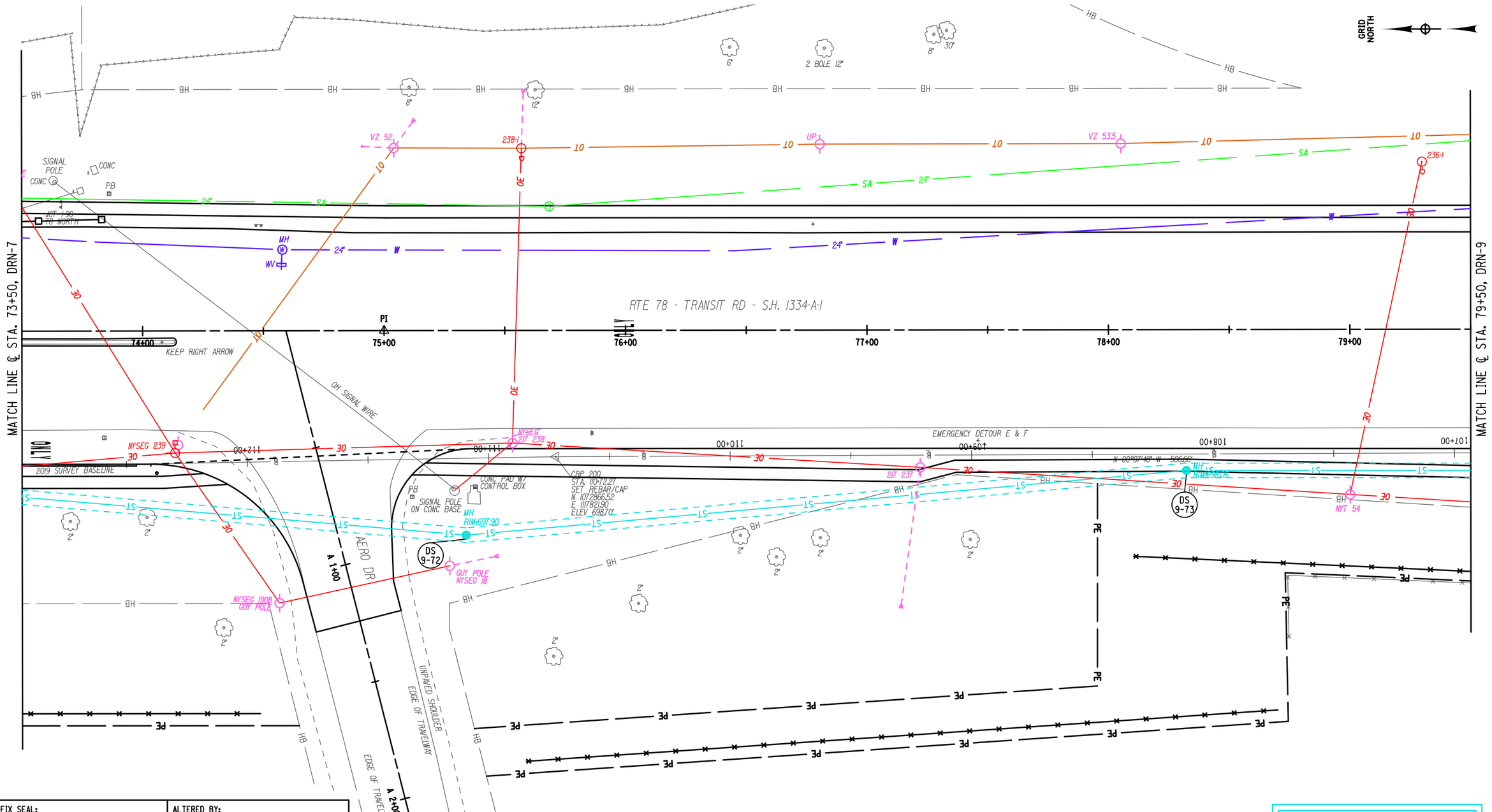

NOTES:

1. REFER TO DWGS.DTB-1 TO DTB-2 FOR PROPOSED DRAINAGE TABLE.
2. REFER TO DWG.DTB-3 FOR DRAINAGE REPAIR/ALTER TABLES.
3. REFER TO DWGS.DDT-1 TO DDT-3 FOR DRAINAGE DETAILS.

20 0 20 40 60 80'

1" = 40'

NO DRAINAGE WORK ON THIS SHEET

AFFIX SEAL:
ON:

ALTERED BY:
ON:

D264571

STATE OF NEW YORK · ROBERT F. SCHALLER · LICENSED PROFESSIONAL ENGINEER · NO. 082465

AS-BUILT REVISIONS
DESCRIPTION OF ALTERATIONS:

NY 78, TRANSIT ROAD, S.H. 1334A-1
FRENCH ROAD TO WEHRLE DRIVE
TOWNS OF CHEEKTOWAGA & LANCASTER
VILLAGE OF DEPEW
COUNTY: ERIE REGION: 05

PIN 5813.61
NY 78
UTILITY QUALITY LEVEL D

BRIDGES

CULVERTS

ALL DIMENSIONS IN ft UNLESS OTHERWISE NOTED

DRAINAGE PLANS
STA. 73+50 TO STA. 79+50

CONTRACT NUMBER
D264571

DRAWING NO. DRN-8
SHEET NO. 331

IT IS A VIOLATION OF LAW FOR ANY PERSON, UNLESS THEY ARE ACTING UNDER THE DIRECTION OF A LICENSED PROFESSIONAL ENGINEER, ARCHITECT, LANDSCAPE ARCHITECT, OR LAND SURVEYOR, TO ALTER AN ITEM IN ANY WAY. IF AN ITEM BEARING THE STAMP OF A LICENSED PROFESSIONAL IS ALTERED, THE ALTERING ENGINEER, ARCHITECT, LANDSCAPE ARCHITECT, OR LAND SURVEYOR SHALL STAMP THE DOCUMENT AND INCLUDE THE NOTATION "ALTERED BY" FOLLOWED BY THEIR SIGNATURE, THE DATE OF SUCH ALTERATION, AND A SPECIFIC DESCRIPTION OF THE ALTERATION.

NEW YORK STATE OF OPPORTUNITY. Department of Transportation

PROJECT MANAGER S. S. VAIDYA
CHECK R. F. SCHALLER
DRAFTING C. L. CRITES
CHECK R. F. SCHALLER
DESIGN C. L. CRITES
JOB MANAGER R. F. SCHALLER
DESIGN SUPERVISOR S. S. VAIDYA

FILE NAME = 581361_CPH_HWY_DRN-8.dgn
DATE/TIME = 22-JUN-2021 12:51
USER = ccrites

PROJECT MANAGER S. S. VAIDYA
CHECK R. F. SCHALLER
DRAFTING C. L. CRITES
DESIGN C. L. CRITES
JOB MANAGER R. F. SCHALLER
DESIGN SUPERVISOR S. S. VAIDYA

FILE NAME = 581361_CPH_HWY_DRN-9.dgn
DATE/TIME = 22-JUN-2021 12:51
USER = ccrites

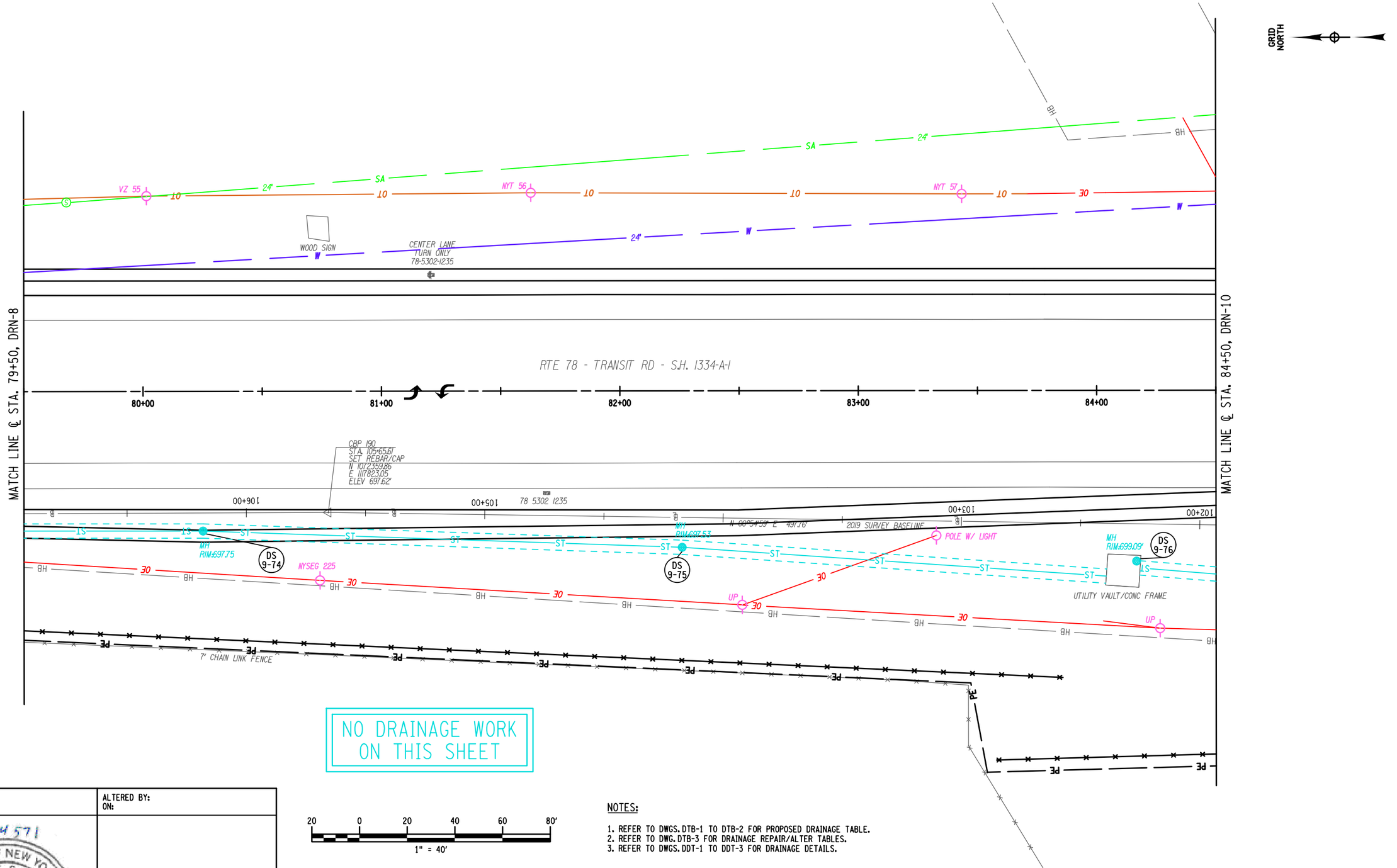

20 0 20 40 60 80'
1" = 40'

NOTES:

1. REFER TO DWGS. DTB-1 TO DTB-2 FOR PROPOSED DRAINAGE TABLE.
2. REFER TO DWG. DTB-3 FOR DRAINAGE REPAIR/ALTER TABLES.
3. REFER TO DWGS. DDT-1 TO DDT-3 FOR DRAINAGE DETAILS.

AFFIX SEAL:
ON:

ALTERED BY:
ON:

D264571
STATE OF NEW YORK
ROBERT F. SCHALLER
NO. 082465
LICENSED PROFESSIONAL ENGINEER

AS-BUILT REVISIONS
DESCRIPTION OF ALTERATIONS:

NY 78, TRANSIT ROAD, S.H. 1334A-1
FRENCH ROAD TO WEHRLE DRIVE
TOWNS OF CHEEKTOWAGA & LANCASTER
VILLAGE OF DEPEW
COUNTY: ERIE REGION: 05

PIN 5813.61
NY 78
UTILITY QUALITY LEVEL D

BRIDGES

CULVERTS

ALL DIMENSIONS IN ft UNLESS OTHERWISE NOTED

DRAINAGE PLANS
STA. 79+50 TO STA. 84+50

CONTRACT NUMBER
D264571

DRAWING NO. DRN-9
SHEET NO. 332

IT IS A VIOLATION OF LAW FOR ANY PERSON, UNLESS THEY ARE ACTING UNDER THE DIRECTION OF A LICENSED PROFESSIONAL ENGINEER, ARCHITECT, LANDSCAPE ARCHITECT, OR LAND SURVEYOR, TO ALTER AN ITEM IN ANY WAY. IF AN ITEM BEARING THE STAMP OF A LICENSED PROFESSIONAL IS ALTERED, THE ALTERING ENGINEER, ARCHITECT, LANDSCAPE ARCHITECT, OR LAND SURVEYOR SHALL STAMP THE DOCUMENT AND INCLUDE THE NOTATION "ALTERED BY" FOLLOWED BY THEIR SIGNATURE, THE DATE OF SUCH ALTERATION, AND A SPECIFIC DESCRIPTION OF THE ALTERATION.

NEW YORK STATE OF OPPORTUNITY. Department of Transportation

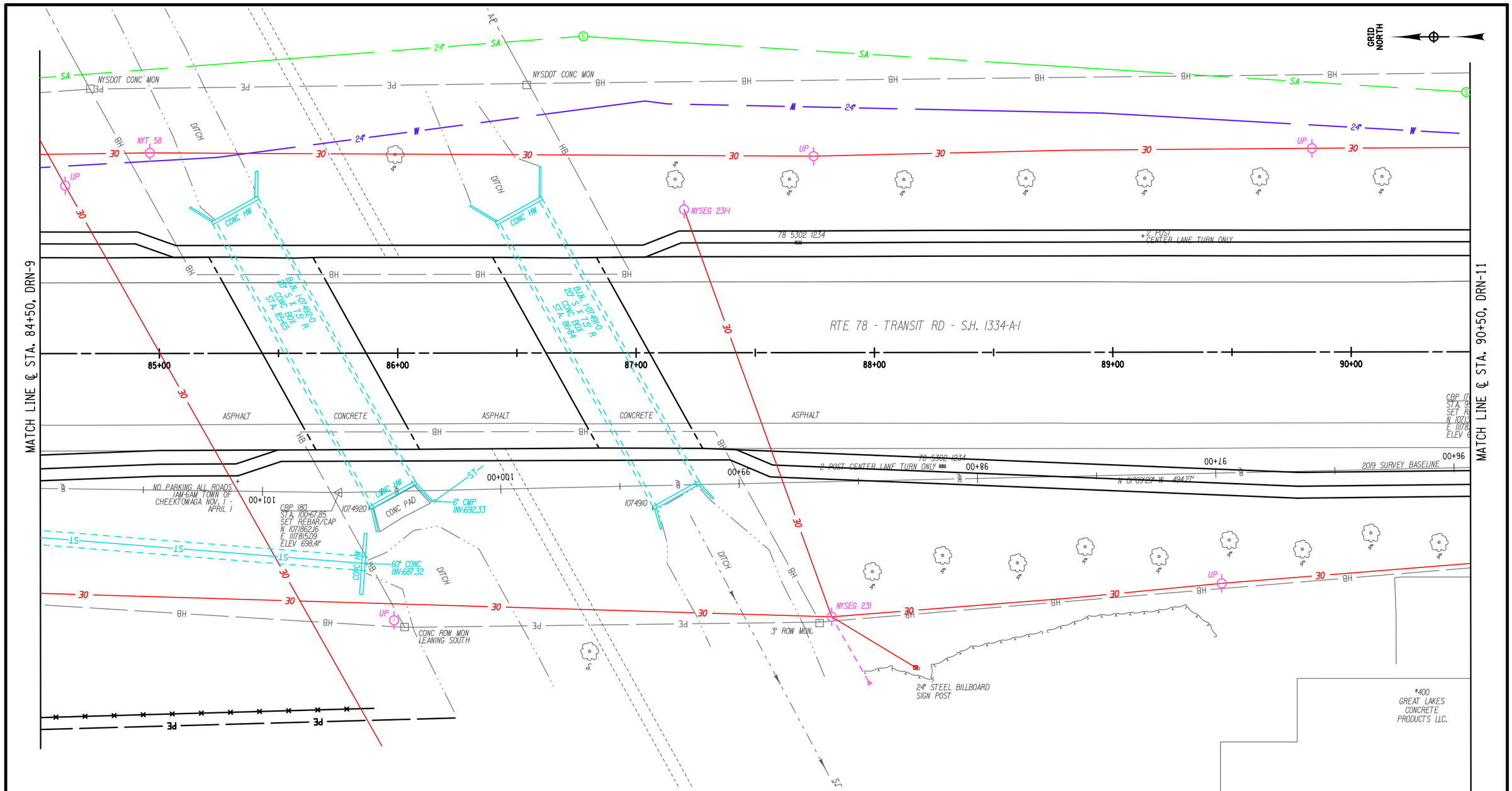

20 0 20 40 60 80'

1" = 40'

NOTES:

1. REFER TO DWGS. DTB-1 TO DTB-2 FOR PROPOSED DRAINAGE TABLE.
2. REFER TO DWG. DTB-3 FOR DRAINAGE REPAIR/ALTER TABLES.
3. REFER TO DWGS. DDT-1 TO DDT-3 FOR DRAINAGE DETAILS.

NO DRAINAGE WORK ON THIS SHEET

AFFIX SEAL:
ON:

ALTERED BY:
ON:

D264571

STATE OF NEW YORK · ROBERT F. SCHALLER · LICENSED PROFESSIONAL ENGINEER · NO. 082465

AS-BUILT REVISIONS
DESCRIPTION OF ALTERATIONS:

NY 78, TRANSIT ROAD, S.H. 1334A-1
FRENCH ROAD TO WEHRLE DRIVE
TOWNS OF CHEEKTOWAGA & LANCASTER
VILLAGE OF DEPEW
COUNTY: ERIE REGION: 05

PIN 5813.61
NY 78
UTILITY QUALITY LEVEL D

BRIDGES

CULVERTS

ALL DIMENSIONS IN ft UNLESS OTHERWISE NOTED

DRAINAGE PLANS
STA. 84+50 TO STA. 90+50

CONTRACT NUMBER
D264571

DRAWING NO. DRN-10
SHEET NO. 333

IT IS A VIOLATION OF LAW FOR ANY PERSON, UNLESS THEY ARE ACTING UNDER THE DIRECTION OF A LICENSED PROFESSIONAL ENGINEER, ARCHITECT, LANDSCAPE ARCHITECT, OR LAND SURVEYOR, TO ALTER AN ITEM IN ANY WAY. IF AN ITEM BEARING THE STAMP OF A LICENSED PROFESSIONAL IS ALTERED, THE ALTERING ENGINEER, ARCHITECT, LANDSCAPE ARCHITECT, OR LAND SURVEYOR SHALL STAMP THE DOCUMENT AND INCLUDE THE NOTATION "ALTERED BY" FOLLOWED BY THEIR SIGNATURE, THE DATE OF SUCH ALTERATION, AND A SPECIFIC DESCRIPTION OF THE ALTERATION.

NEW YORK STATE OF OPPORTUNITY. Department of Transportation

PROJECT MANAGER S. S. VAIDYA
CHECK R. F. SCHALLER
DRAFTING C. L. CRITES
CHECK R. F. SCHALLER
DESIGN C. L. CRITES
JOB MANAGER R. F. SCHALLER
DESIGN SUPERVISOR S. S. VAIDYA

FILE NAME = 581361_CPH_HWY_DRN-10.dgn
DATE/TIME = 22-JUN-2021 12:51
USER = corites

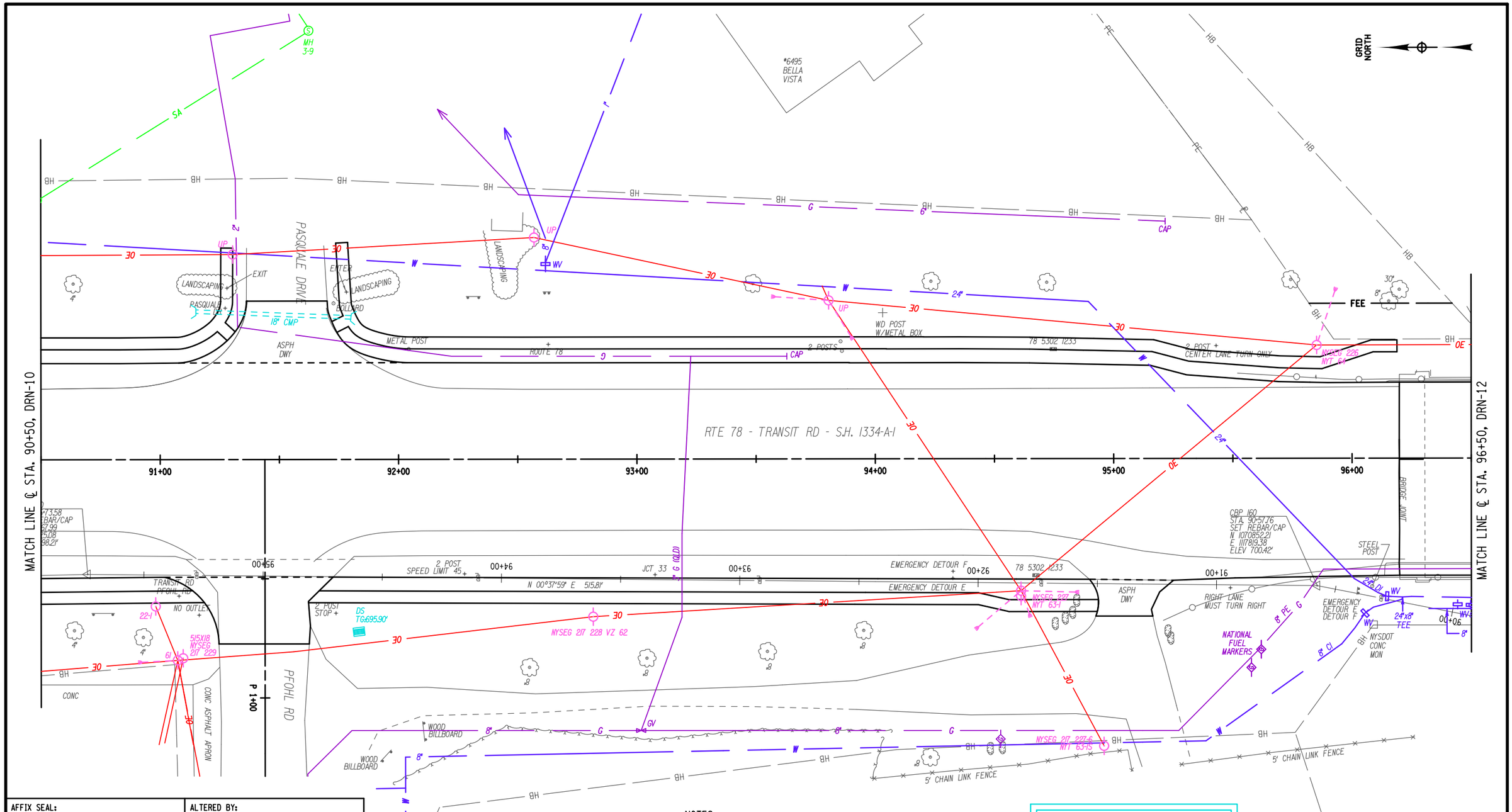

NOTES:

1. REFER TO DWGS. DTB-1 TO DTB-2 FOR PROPOSED DRAINAGE TABLE.
2. REFER TO DWG. DTB-3 FOR DRAINAGE REPAIR/ALTER TABLES.
3. REFER TO DWGS. DDT-1 TO DDT-3 FOR DRAINAGE DETAILS.

NO DRAINAGE WORK ON THIS SHEET

AFFIX SEAL:
ON:

ALTERED BY:
ON:

D264571
STATE OF NEW YORK
ROBERT F. SCHALLER
NO. 082465
LICENSED PROFESSIONAL ENGINEER

AS-BUILT REVISIONS
DESCRIPTION OF ALTERATIONS:

NY 78, TRANSIT ROAD, S.H. 1334A-1
FRENCH ROAD TO WEHRLE DRIVE
TOWNS OF CHEEKTOWAGA & LANCASTER
VILLAGE OF DEPEW
COUNTY: ERIE REGION: 05

PIN 5813.61
NY 78
UTILITY QUALITY LEVEL D

BRIDGES

CULVERTS

ALL DIMENSIONS IN ft UNLESS OTHERWISE NOTED

DRAINAGE PLANS
STA. 90+50 TO STA. 96+50

CONTRACT NUMBER
D264571

DRAWING NO. DRN-11
SHEET NO. 334

IT IS A VIOLATION OF LAW FOR ANY PERSON, UNLESS THEY ARE ACTING UNDER THE DIRECTION OF A LICENSED PROFESSIONAL ENGINEER, ARCHITECT, LANDSCAPE ARCHITECT, OR LAND SURVEYOR, TO ALTER AN ITEM IN ANY WAY. IF AN ITEM BEARING THE STAMP OF A LICENSED PROFESSIONAL IS ALTERED, THE ALTERING ENGINEER, ARCHITECT, LANDSCAPE ARCHITECT, OR LAND SURVEYOR SHALL STAMP THE DOCUMENT AND INCLUDE THE NOTATION "ALTERED BY" FOLLOWED BY THEIR SIGNATURE, THE DATE OF SUCH ALTERATION, AND A SPECIFIC DESCRIPTION OF THE ALTERATION.

NEW YORK STATE OF OPPORTUNITY. Department of Transportation

DESIGN SUPERVISOR S. S. VAIDYA
JOB MANAGER R. F. SCHALLER
DESIGN C. L. CRITES
CHECK R. F. SCHALLER
DRAFTING C. L. CRITES
CHECK R. F. SCHALLER
PROJECT MANAGER S. S. VAIDYA

FILE NAME = 581361_CPH_HWY_DRN-11.dgn
DATE/TIME = 22-JUN-2021 12:51
USER = corites

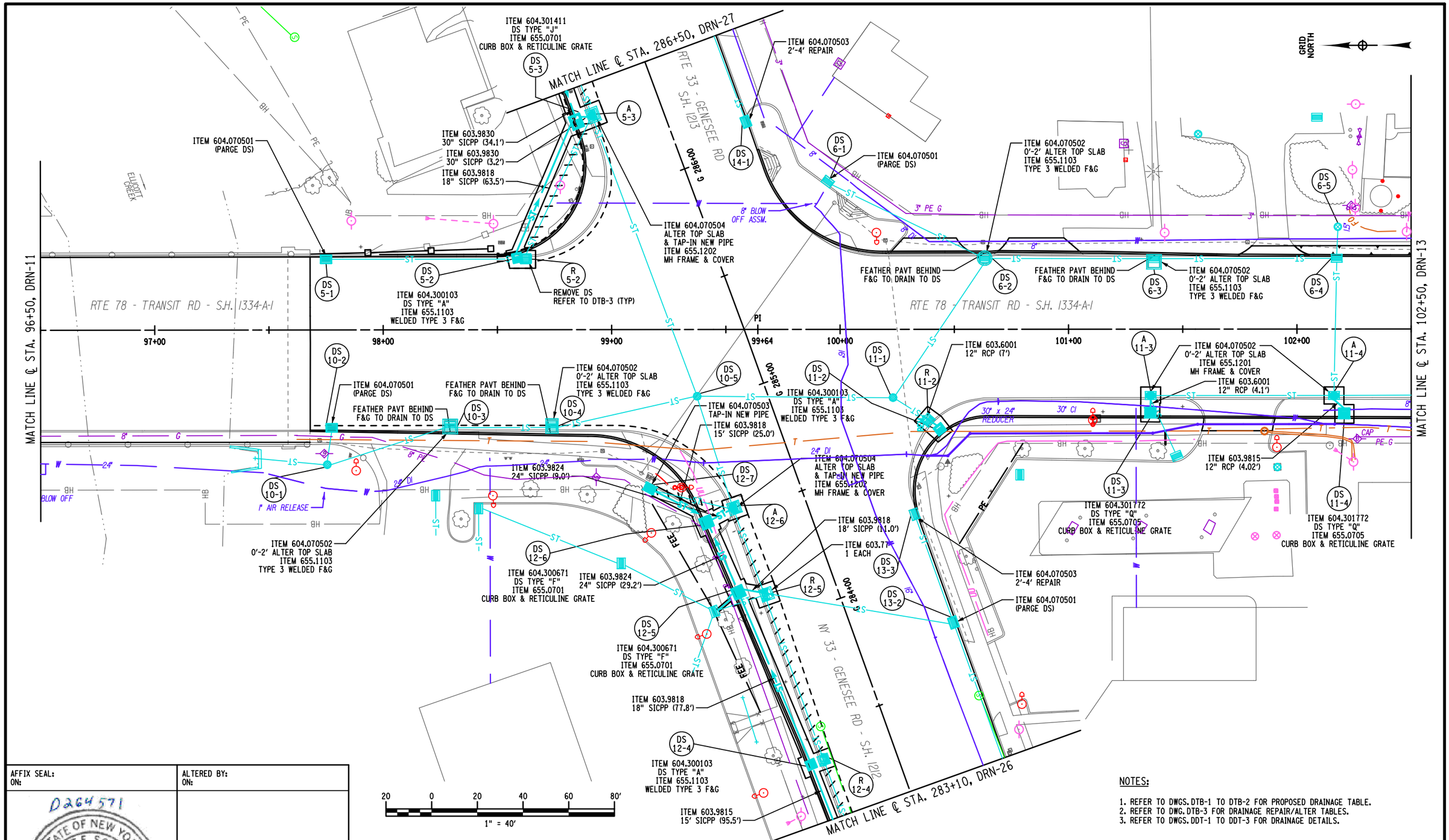

NOTES:

1. REFER TO DWGS. DTB-1 TO DTB-2 FOR PROPOSED DRAINAGE TABLE.
2. REFER TO DWG. DTB-3 FOR DRAINAGE REPAIR/ALTER TABLES.
3. REFER TO DWGS. DDT-1 TO DDT-3 FOR DRAINAGE DETAILS.

AFFIX SEAL:
ON:

D264571

STATE OF NEW YORK · ROBERT F. SCHALLER · LICENSED PROFESSIONAL ENGINEER · NO. 082465

ALTERED BY:
ON:

AS-BUILT REVISIONS
DESCRIPTION OF ALTERATIONS:

NY 78, TRANSIT ROAD, S.H. 1334A-1
FRENCH ROAD TO WEHRLE DRIVE
TOWNS OF CHEEKTOWAGA & LANCASTER
VILLAGE OF DEPEW
COUNTY: ERIE REGION: 05

PIN 5813.61
NY 78
UTILITY QUALITY LEVEL D

BRIDGES

CULVERTS

ALL DIMENSIONS IN ft UNLESS OTHERWISE NOTED

DRAINAGE PLANS
STA. 96+50 TO STA. 102+50

CONTRACT NUMBER
D264571

DRAWING NO. DRN-12
SHEET NO. 335

IT IS A VIOLATION OF LAW FOR ANY PERSON, UNLESS THEY ARE ACTING UNDER THE DIRECTION OF A LICENSED PROFESSIONAL ENGINEER, ARCHITECT, LANDSCAPE ARCHITECT, OR LAND SURVEYOR, TO ALTER AN ITEM IN ANY WAY. IF AN ITEM BEARING THE STAMP OF A LICENSED PROFESSIONAL IS ALTERED, THE ALTERING ENGINEER, ARCHITECT, LANDSCAPE ARCHITECT, OR LAND SURVEYOR SHALL STAMP THE DOCUMENT AND INCLUDE THE NOTATION "ALTERED BY" FOLLOWED BY THEIR SIGNATURE, THE DATE OF SUCH ALTERATION, AND A SPECIFIC DESCRIPTION OF THE ALTERATION.

NEW YORK STATE OF OPPORTUNITY. Department of Transportation

PROJECT MANAGER S. S. VAIDYA
CHECK R. F. SCHALLER
DRAFTING P. M. LAUGEMAN
CHECK R. F. SCHALLER
DESIGN P. M. LAUGEMAN
JOB MANAGER R. F. SCHALLER
DESIGN SUPERVISOR S. S. VAIDYA

FILE NAME = 581361_CPH.HWY.DRN-12.dgn
DATE/TIME = 22-JUN-2021 12:51
USER = cortes

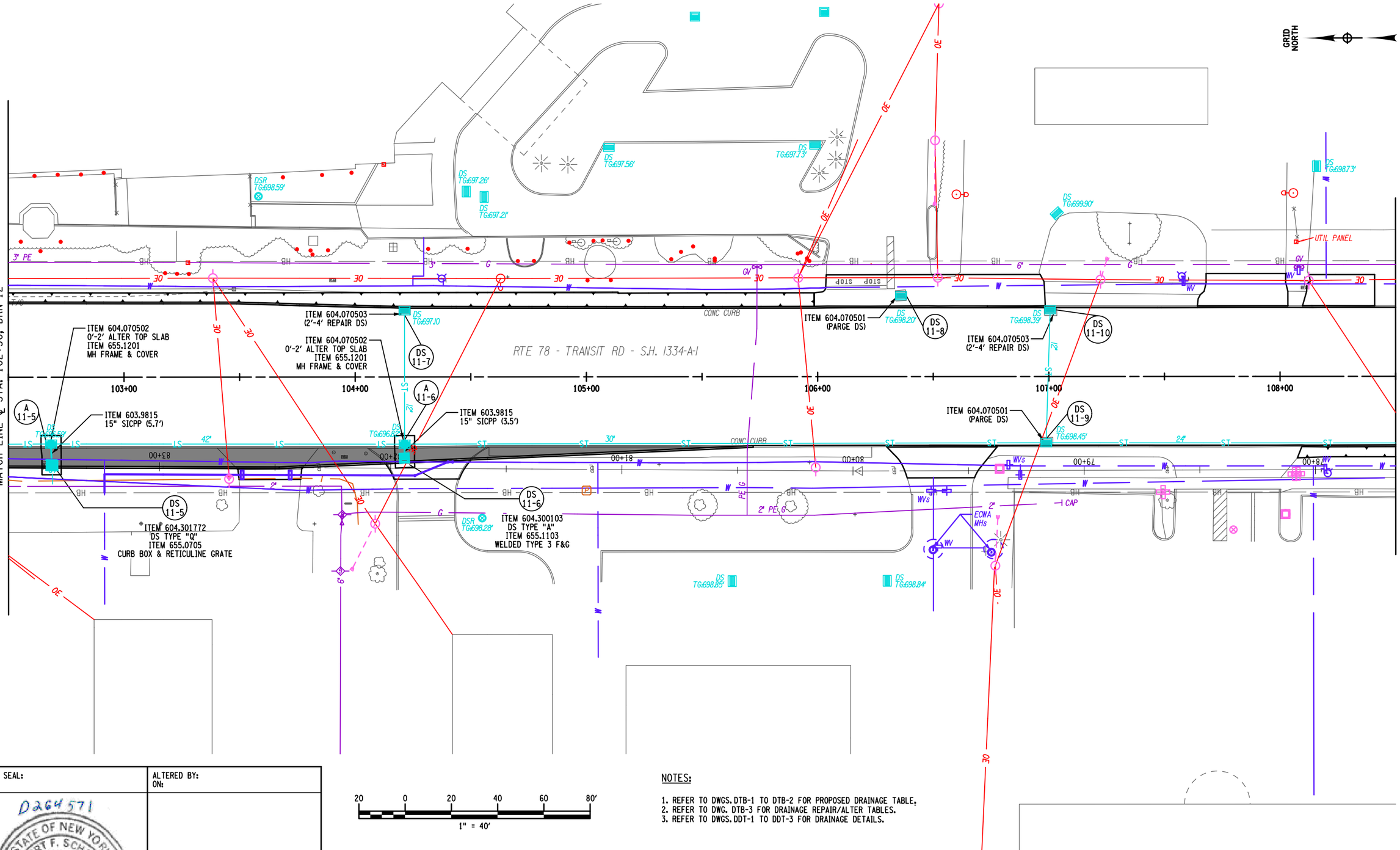

AFFIX SEAL: ON:	ALTERED BY: ON:
D264571 STATE OF NEW YORK ROBERT F. SCHALLER NO. 082465 LICENSED PROFESSIONAL ENGINEER	

20 0 20 40 60 80'
1" = 40'

NOTES:

1. REFER TO DWGS. DTB-1 TO DTB-2 FOR PROPOSED DRAINAGE TABLE.
2. REFER TO DWG. DTB-3 FOR DRAINAGE REPAIR/ALTER TABLES.
3. REFER TO DWGS. DDT-1 TO DDT-3 FOR DRAINAGE DETAILS.

AS-BUILT REVISIONS DESCRIPTION OF ALTERATIONS:	NY 78, TRANSIT ROAD, S.H. 1334A-1 FRENCH ROAD TO WEHRLE DRIVE TOWNS OF CHEEKTOWAGA & LANCASTER VILLAGE OF DEPEW COUNTY: ERIE REGION: 05	PIN 5813.61 NY 78 UTILITY QUALITY LEVEL D	BRIDGES	CULVERTS	ALL DIMENSIONS IN ft UNLESS OTHERWISE NOTED DRAINAGE PLANS STA. 102+50 TO STA. 108+50	CONTRACT NUMBER D264571 DRAWING NO. DRN-13 SHEET NO. 336

IT IS A VIOLATION OF LAW FOR ANY PERSON, UNLESS THEY ARE ACTING UNDER THE DIRECTION OF A LICENSED PROFESSIONAL ENGINEER, ARCHITECT, LANDSCAPE ARCHITECT, OR LAND SURVEYOR, TO ALTER AN ITEM IN ANY WAY. IF AN ITEM BEARING THE STAMP OF A LICENSED PROFESSIONAL IS ALTERED, THE ALTERING ENGINEER, ARCHITECT, LANDSCAPE ARCHITECT, OR LAND SURVEYOR SHALL STAMP THE DOCUMENT AND INCLUDE THE NOTATION "ALTERED BY" FOLLOWED BY THEIR SIGNATURE, THE DATE OF SUCH ALTERATION, AND A SPECIFIC DESCRIPTION OF THE ALTERATION.

NEW YORK STATE OF OPPORTUNITY. Department of Transportation

PROJECT MANAGER S. S. VAIDYA
CHECK R. F. SCHALLER
DRAFTING P.M. LAUGEMAN
CHECK R. F. SCHALLER
DESIGN P.M. LAUGEMAN
JOB MANAGER R. F. SCHALLER
DESIGN SUPERVISOR S. S. VAIDYA

FILE NAME = 581361_CPH_HWY_DRN-13.dgn
DATE/TIME = 22-JUN-2021 12:51
USER = cortes

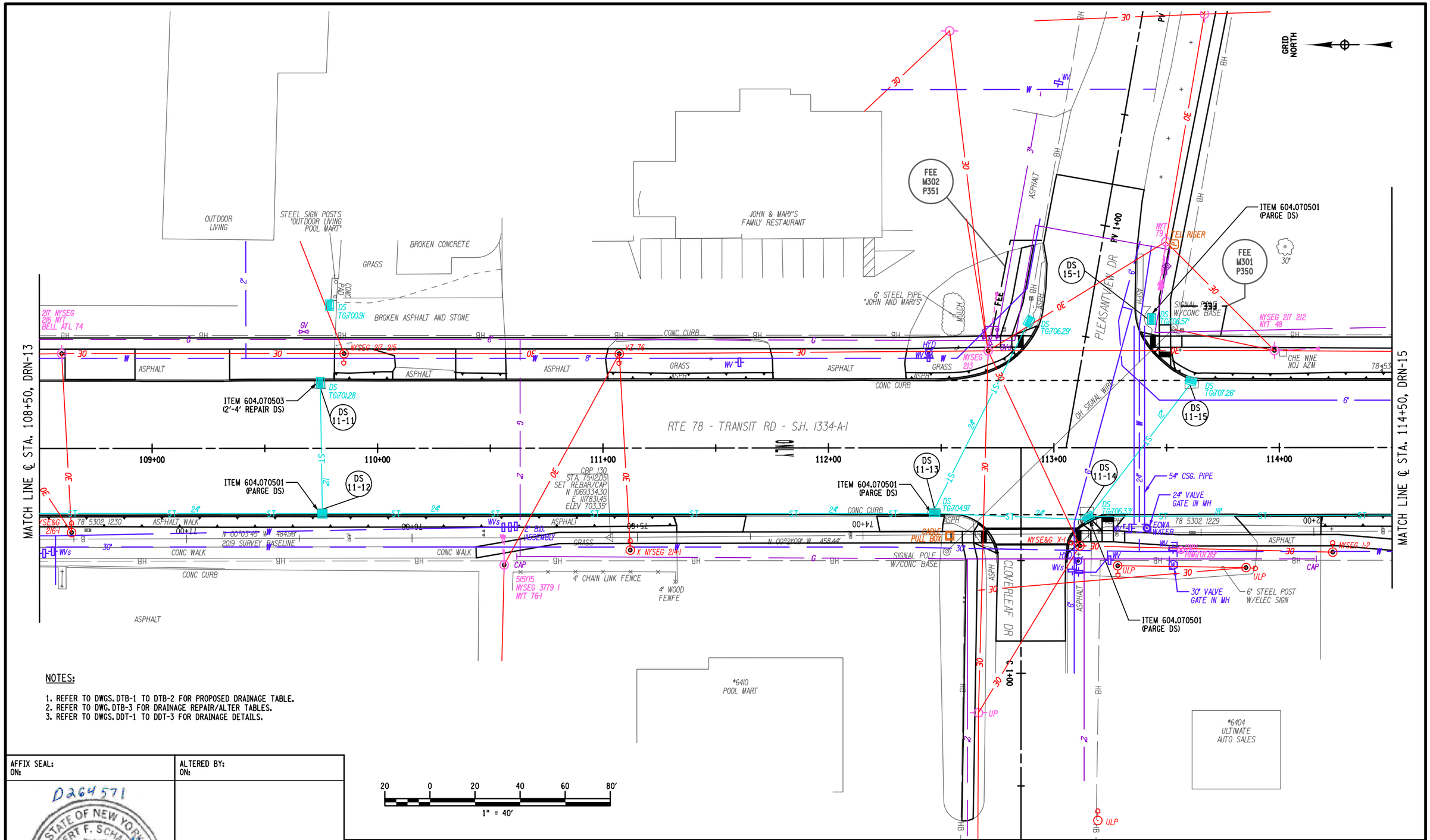

NOTES:

1. REFER TO DWGS. DTB-1 TO DTB-2 FOR PROPOSED DRAINAGE TABLE.
2. REFER TO DWG. DTB-3 FOR DRAINAGE REPAIR/ALTER TABLES.
3. REFER TO DWGS. DDT-1 TO DDT-3 FOR DRAINAGE DETAILS.

AFFIX SEAL: ON:	ALTERED BY: ON:
D264571 STATE OF NEW YORK ROBERT F. SCHALLER LICENSED PROFESSIONAL ENGINEER NO. 082465	

AS-BUILT REVISIONS
DESCRIPTION OF ALTERATIONS:

NY 78, TRANSIT ROAD, S.H. 1334A-1
FRENCH ROAD TO WEHRLE DRIVE
TOWNS OF CHEEKTOWAGA & LANCASTER
VILLAGE OF DEPEW
COUNTY: ERIE REGION: 05

PIN 5813.61
NY 78
UTILITY QUALITY LEVEL D

BRIDGES

CULVERTS

ALL DIMENSIONS IN ft UNLESS OTHERWISE NOTED

DRAINAGE PLANS
STA. 108+50 TO STA. 114+50

CONTRACT NUMBER D264571

DRAWING NO. DRN-14
SHEET NO. 337

IT IS A VIOLATION OF LAW FOR ANY PERSON, UNLESS THEY ARE ACTING UNDER THE DIRECTION OF A LICENSED PROFESSIONAL ENGINEER, ARCHITECT, LANDSCAPE ARCHITECT, OR LAND SURVEYOR, TO ALTER AN ITEM IN ANY WAY. IF AN ITEM BEARING THE STAMP OF A LICENSED PROFESSIONAL IS ALTERED, THE ALTERING ENGINEER, ARCHITECT, LANDSCAPE ARCHITECT, OR LAND SURVEYOR SHALL STAMP THE DOCUMENT AND INCLUDE THE NOTATION "ALTERED BY" FOLLOWED BY THEIR SIGNATURE, THE DATE OF SUCH ALTERATION, AND A SPECIFIC DESCRIPTION OF THE ALTERATION.

NEW YORK STATE OF OPPORTUNITY. Department of Transportation

PROJECT MANAGER S. S. VAIDYA
CHECK R. F. SCHALLER
DRAFTING C. L. CRITES
DESIGN C. L. CRITES
JOB MANAGER R. F. SCHALLER
DESIGN SUPERVISOR S. S. VAIDYA

FILE NAME = 581361_CPH_HWY_DRN-14.dgn
DATE/TIME = 22-JUN-2021 12:51
USER = cortes

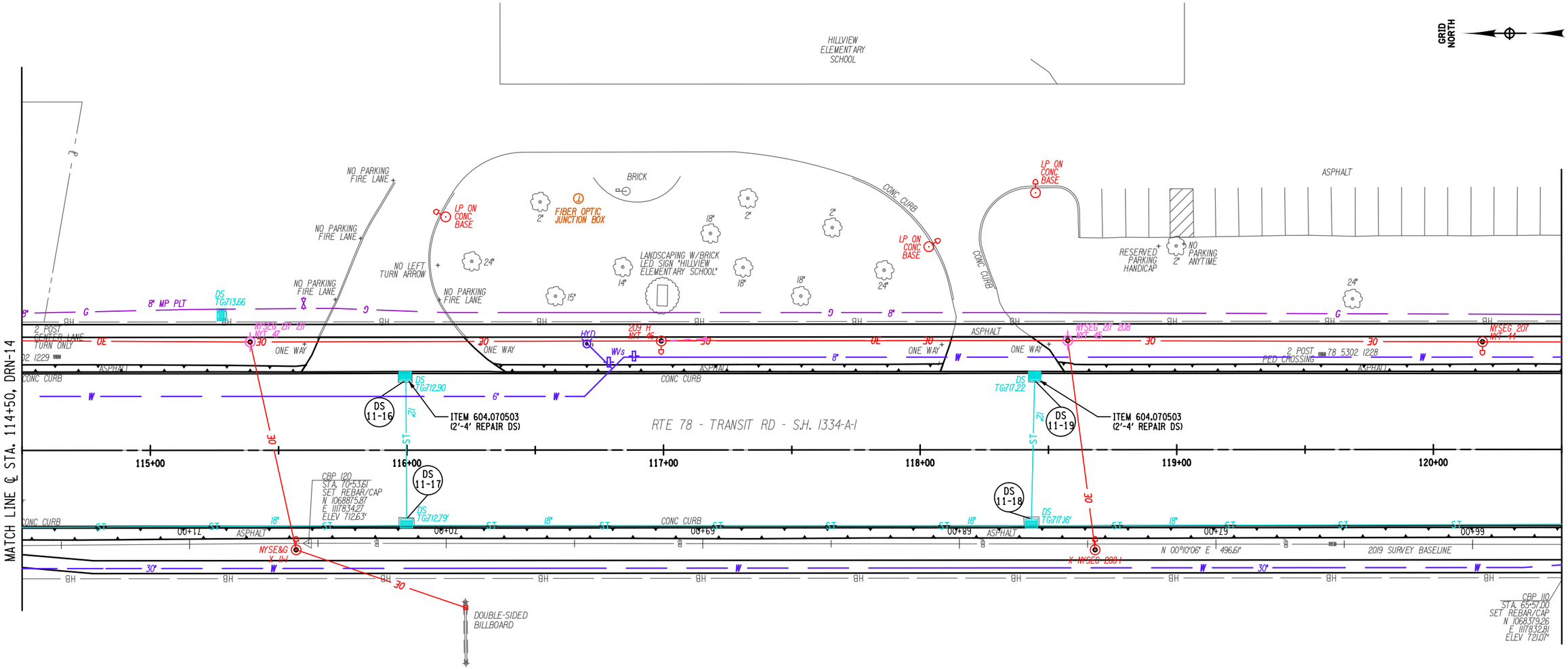

20 0 20 40 60 80'

1" = 40'

NOTES:

1. REFER TO DWGS.DTB-1 TO DTB-2 FOR PROPOSED DRAINAGE TABLE.
2. REFER TO DWG.DTB-3 FOR DRAINAGE REPAIR/ALTER TABLES.
3. REFER TO DWGS.DDT-1 TO DDT-3 FOR DRAINAGE DETAILS.

AFFIX SEAL: ON:

ALTERED BY: ON:

D264571 STATE OF NEW YORK ROBERT F. SCHALLER NO. 082465 LICENSED PROFESSIONAL ENGINEER

AS-BUILT REVISIONS
DESCRIPTION OF ALTERATIONS:

NY 78, TRANSIT ROAD, S.H. 1334A-1
FRENCH ROAD TO WEHRLE DRIVE
TOWNS OF CHEEKTOWAGA & LANCASTER
VILLAGE OF DEPEW
COUNTY: ERIE REGION: 05

PIN 5813.61
NY 78
UTILITY QUALITY LEVEL D

BRIDGES

CULVERTS

ALL DIMENSIONS IN ft UNLESS OTHERWISE NOTED

DRAINAGE PLANS
STA. 114+50 TO STA. 120+50

CONTRACT NUMBER D264571

DRAWING NO. DRN-15

SHEET NO. 338

IT IS A VIOLATION OF LAW FOR ANY PERSON, UNLESS THEY ARE ACTING UNDER THE DIRECTION OF A LICENSED PROFESSIONAL ENGINEER, ARCHITECT, LANDSCAPE ARCHITECT, OR LAND SURVEYOR, TO ALTER AN ITEM IN ANY WAY. IF AN ITEM BEARING THE STAMP OF A LICENSED PROFESSIONAL IS ALTERED, THE ALTERING ENGINEER, ARCHITECT, LANDSCAPE ARCHITECT, OR LAND SURVEYOR SHALL STAMP THE DOCUMENT AND INCLUDE THE NOTATION "ALTERED BY" FOLLOWED BY THEIR SIGNATURE, THE DATE OF SUCH ALTERATION, AND A SPECIFIC DESCRIPTION OF THE ALTERATION.

NEW YORK STATE OF OPPORTUNITY. Department of Transportation

PROJECT MANAGER S. S. VAIDYA
CHECK R. F. SCHALLER
DRAFTING C. L. CRITES
CHECK R. F. SCHALLER
DESIGN C. L. CRITES
JOB MANAGER R. F. SCHALLER
DESIGN SUPERVISOR S. S. VAIDYA

FILE NAME = 581361_CPH_HWY_DRN-15.dgn
DATE/TIME = 22-JUN-2021 12:51
USER = cc rites

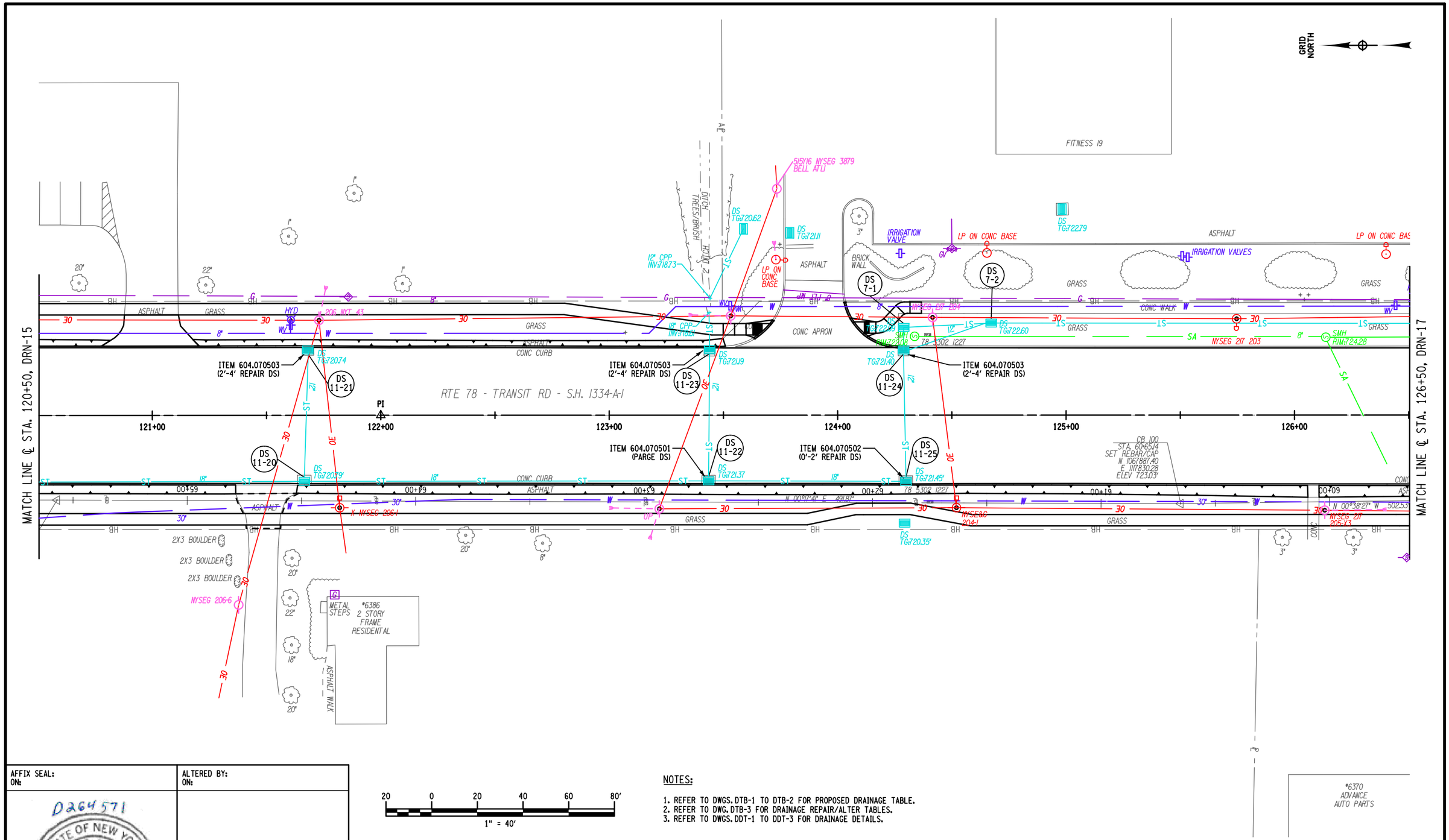

AFFIX SEAL: ON:	ALTERED BY: ON:
D264571 STATE OF NEW YORK ROBERT F. SCHALLER LICENSED PROFESSIONAL ENGINEER NO. 082465	

20 0 20 40 60 80'

1" = 40'

NOTES:

1. REFER TO DWGS. DTB-1 TO DTB-2 FOR PROPOSED DRAINAGE TABLE.
2. REFER TO DWG. DTB-3 FOR DRAINAGE REPAIR/ALTER TABLES.
3. REFER TO DWGS. DDT-1 TO DDT-3 FOR DRAINAGE DETAILS.

AS-BUILT REVISIONS DESCRIPTION OF ALTERATIONS:	NY 78, TRANSIT ROAD, S.H. 1334A-1	PIN 5813.61	BRIDGES	CULVERTS	ALL DIMENSIONS IN ft UNLESS OTHERWISE NOTED	CONTRACT NUMBER
	FRENCH ROAD TO WEHRLE DRIVE	NY 78			DRAINAGE PLANS STA. 120+50 TO STA. 126+50	D264571
	TOWNS OF CHEEKTOWAGA & LANCASTER	UTILITY QUALITY LEVEL D				DRAWING NO. DRN-16
	VILLAGE OF DEPEW					SHEET NO. 339
	COUNTY: ERIE REGION: 05					

IT IS A VIOLATION OF LAW FOR ANY PERSON, UNLESS THEY ARE ACTING UNDER THE DIRECTION OF A LICENSED PROFESSIONAL ENGINEER, ARCHITECT, LANDSCAPE ARCHITECT, OR LAND SURVEYOR, TO ALTER AN ITEM IN ANY WAY. IF AN ITEM BEARING THE STAMP OF A LICENSED PROFESSIONAL IS ALTERED, THE ALTERING ENGINEER, ARCHITECT, LANDSCAPE ARCHITECT, OR LAND SURVEYOR SHALL STAMP THE DOCUMENT AND INCLUDE THE NOTATION "ALTERED BY" FOLLOWED BY THEIR SIGNATURE, THE DATE OF SUCH ALTERATION, AND A SPECIFIC DESCRIPTION OF THE ALTERATION.

NEW YORK STATE OF OPPORTUNITY. Department of Transportation

PROJECT MANAGER S. S. VAIDYA
CHECK R. F. SCHALLER
DRAFTING C. L. CRITES
CHECK R. F. SCHALLER
DESIGN C. L. CRITES
JOB MANAGER R. F. SCHALLER
DESIGN SUPERVISOR S. S. VAIDYA
FILE NAME = 581361_CPH_HWY_DRN-16.dgn
DATE/TIME = 22-JUN-2021 12:51
USER = cortes

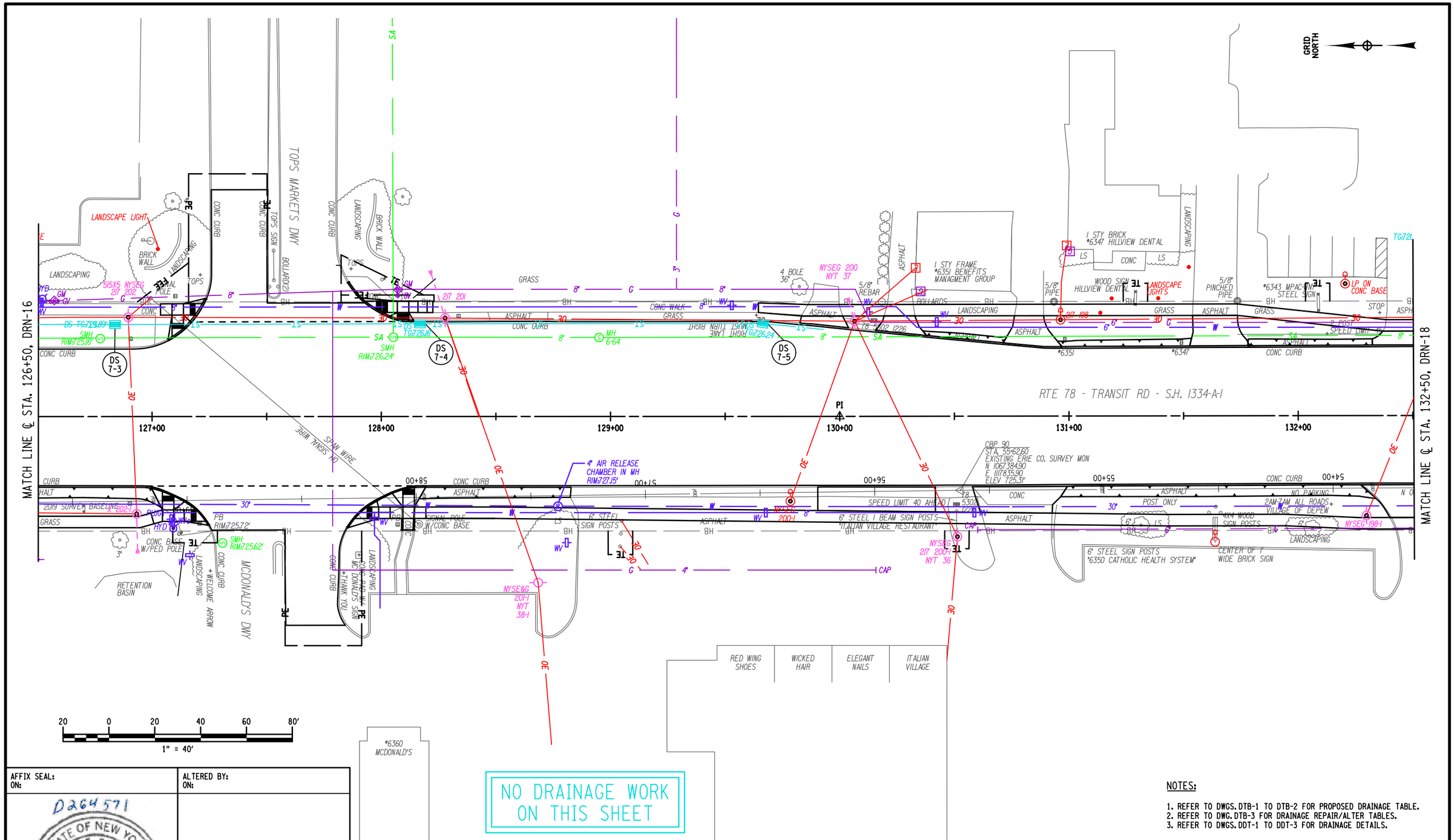

NO DRAINAGE WORK ON THIS SHEET

NOTES:

1. REFER TO DWGS. DTB-1 TO DTB-2 FOR PROPOSED DRAINAGE TABLE.
2. REFER TO DWG. DTB-3 FOR DRAINAGE REPAIR/ALTER TABLES.
3. REFER TO DWGS. DDT-1 TO DDT-3 FOR DRAINAGE DETAILS.

AFFIX SEAL:
ON:

ALTERED BY:
ON:

D264571
STATE OF NEW YORK
ROBERT F. SCHALLER
NO. 082465
LICENSED PROFESSIONAL ENGINEER

AS-BUILT REVISIONS
DESCRIPTION OF ALTERATIONS:

NY 78, TRANSIT ROAD, S.H. 1334A-1
FRENCH ROAD TO WEHRLE DRIVE
TOWNS OF CHEEKTOWAGA & LANCASTER
VILLAGE OF DEPEW
COUNTY: ERIE REGION: 05

PIN 5813.61
NY 78
UTILITY QUALITY LEVEL D

BRIDGES

CULVERTS

ALL DIMENSIONS IN ft UNLESS OTHERWISE NOTED

DRAINAGE PLANS
STA. 126+50 TO STA. 132+50

CONTRACT NUMBER
D264571

DRAWING NO. DRN-17
SHEET NO. 340

IT IS A VIOLATION OF LAW FOR ANY PERSON, UNLESS THEY ARE ACTING UNDER THE DIRECTION OF A LICENSED PROFESSIONAL ENGINEER, ARCHITECT, LANDSCAPE ARCHITECT, OR LAND SURVEYOR, TO ALTER AN ITEM IN ANY WAY. IF AN ITEM BEARING THE STAMP OF A LICENSED PROFESSIONAL IS ALTERED, THE ALTERING ENGINEER, ARCHITECT, LANDSCAPE ARCHITECT, OR LAND SURVEYOR SHALL STAMP THE DOCUMENT AND INCLUDE THE NOTATION "ALTERED BY" FOLLOWED BY THEIR SIGNATURE, THE DATE OF SUCH ALTERATION, AND A SPECIFIC DESCRIPTION OF THE ALTERATION.

NEW YORK STATE OF OPPORTUNITY. Department of Transportation

PROJECT MANAGER S. S. VAIDYA
CHECK R. F. SCHALLER
DRAFTING C. L. CRITES
CHECK R. F. SCHALLER
DESIGN C. L. CRITES
JOB MANAGER R. F. SCHALLER
DESIGN SUPERVISOR S. S. VAIDYA

FILE NAME = 581361_CPH_HWY_DRN-17.dgn
DATE/TIME = 22-JUN-2021 12:51
USER = corites

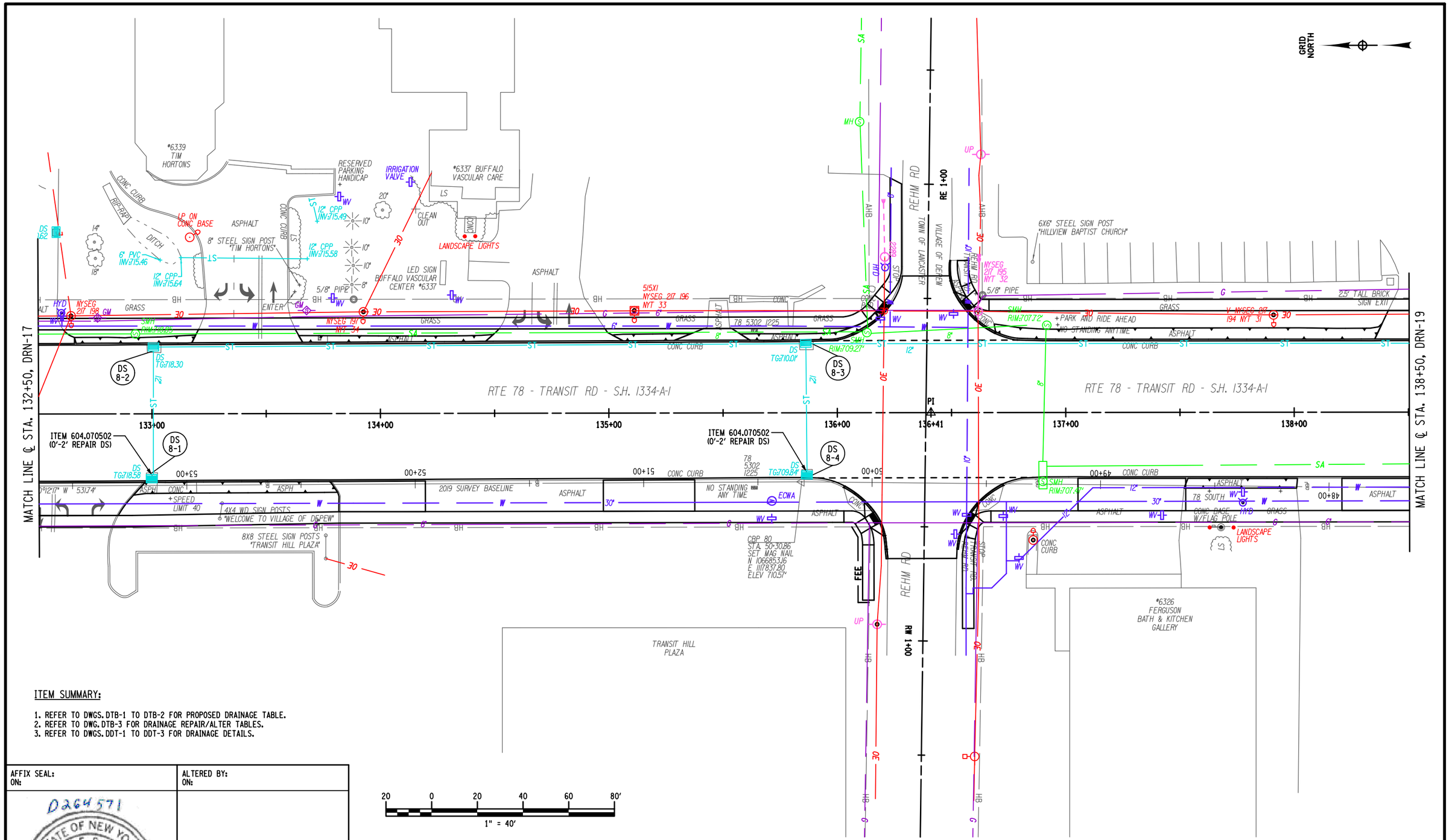

ITEM SUMMARY:

1. REFER TO DWGS. DTB-1 TO DTB-2 FOR PROPOSED DRAINAGE TABLE.
2. REFER TO DWG. DTB-3 FOR DRAINAGE REPAIR/ALTER TABLES.
3. REFER TO DWGS. DDT-1 TO DDT-3 FOR DRAINAGE DETAILS.

AFFIX SEAL: ON:	ALTERED BY: ON:
D264571 STATE OF NEW YORK ROBERT F. SCHALLER LICENSED PROFESSIONAL ENGINEER NO. 082465	

AS-BUILT REVISIONS
DESCRIPTION OF ALTERATIONS:

NY 78, TRANSIT ROAD, S.H. 1334A-1
FRENCH ROAD TO WEHRLE DRIVE
TOWNS OF CHEEKTOWAGA & LANCASTER
VILLAGE OF DEPEW
COUNTY: ERIE REGION: 05

PIN 5813.61
NY 78
UTILITY QUALITY LEVEL D

BRIDGES

CULVERTS

ALL DIMENSIONS IN ft UNLESS OTHERWISE NOTED

DRAINAGE PLANS
STA. 132+50 TO STA. 138+50

CONTRACT NUMBER D264571

DRAWING NO. DRN-18
SHEET NO. 341

IT IS A VIOLATION OF LAW FOR ANY PERSON, UNLESS THEY ARE ACTING UNDER THE DIRECTION OF A LICENSED PROFESSIONAL ENGINEER, ARCHITECT, LANDSCAPE ARCHITECT, OR LAND SURVEYOR, TO ALTER AN ITEM IN ANY WAY. IF AN ITEM BEARING THE STAMP OF A LICENSED PROFESSIONAL IS ALTERED, THE ALTERING ENGINEER, ARCHITECT, LANDSCAPE ARCHITECT, OR LAND SURVEYOR SHALL STAMP THE DOCUMENT AND INCLUDE THE NOTATION "ALTERED BY" FOLLOWED BY THEIR SIGNATURE, THE DATE OF SUCH ALTERATION, AND A SPECIFIC DESCRIPTION OF THE ALTERATION.

NEW YORK STATE OF OPPORTUNITY. Department of Transportation

PROJECT MANAGER S. S. VAIDYA
CHECK R. F. SCHALLER
DRAFTING C. L. CRITES
CHECK R. F. SCHALLER
DESIGN C. L. CRITES
JOB MANAGER R. F. SCHALLER
DESIGN SUPERVISOR S. S. VAIDYA

FILE NAME = 581361_CPH_HWY_DRN-18.dgn
DATE/TIME = 22-JUN-2021 12:52
USER = cortes

PROJECT MANAGER S. S. VAIDYA
CHECK R. F. SCHALLER
DRAFTING C. L. CRITES
CHECK R. F. SCHALLER
DESIGN C. L. CRITES
JOB MANAGER R. F. SCHALLER
DESIGN SUPERVISOR S. S. VAIDYA

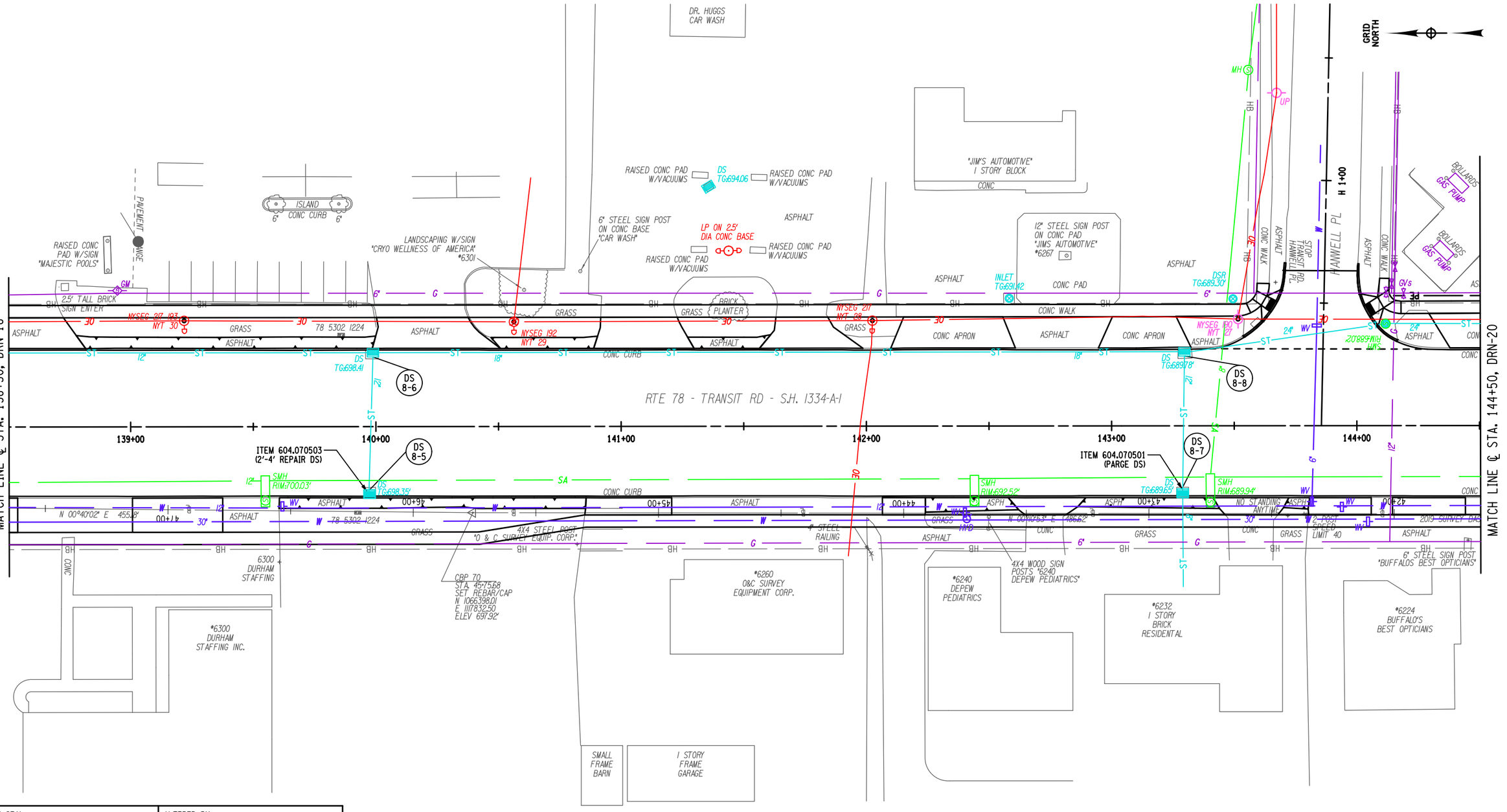

AFFIX SEAL:
ON:

ALTERED BY:
ON:

D264571
STATE OF NEW YORK
ROBERT F. SCHALLER
NO. 082465
LICENSED PROFESSIONAL ENGINEER

NOTES:

1. REFER TO DWGS. DTB-1 TO DTB-2 FOR PROPOSED DRAINAGE TABLE.
2. REFER TO DWG. DTB-3 FOR DRAINAGE REPAIR/ALTER TABLES.
3. REFER TO DWGS. DDT-1 TO DDT-3 FOR DRAINAGE DETAILS.

AS-BUILT REVISIONS
DESCRIPTION OF ALTERATIONS:

NY 78, TRANSIT ROAD, S.H. 1334A-1
FRENCH ROAD TO WEHRLE DRIVE
TOWNS OF CHEEKTOWAGA & LANCASTER
VILLAGE OF DEPEW
COUNTY: ERIE REGION: 05

PIN 5813.61
NY 78
UTILITY QUALITY LEVEL D

BRIDGES

CULVERTS

ALL DIMENSIONS IN ft UNLESS OTHERWISE NOTED

DRAINAGE PLANS
STA. 135+50 TO STA. 144+50

CONTRACT NUMBER
D264571

DRAWING NO. DRN-19
SHEET NO. 342

IT IS A VIOLATION OF LAW FOR ANY PERSON, UNLESS THEY ARE ACTING UNDER THE DIRECTION OF A LICENSED PROFESSIONAL ENGINEER, ARCHITECT, LANDSCAPE ARCHITECT, OR LAND SURVEYOR, TO ALTER AN ITEM IN ANY WAY. IF AN ITEM BEARING THE STAMP OF A LICENSED PROFESSIONAL IS ALTERED, THE ALTERING ENGINEER, ARCHITECT, LANDSCAPE ARCHITECT, OR LAND SURVEYOR SHALL STAMP THE DOCUMENT AND INCLUDE THE NOTATION "ALTERED BY" FOLLOWED BY THEIR SIGNATURE, THE DATE OF SUCH ALTERATION, AND A SPECIFIC DESCRIPTION OF THE ALTERATION.

NEW YORK STATE OF OPPORTUNITY. Department of Transportation

FILE NAME = 581361_CPH_HWY_DRN-19.dgn
DATE/TIME = 22-JUN-2021 12:52
USER = cc1tes

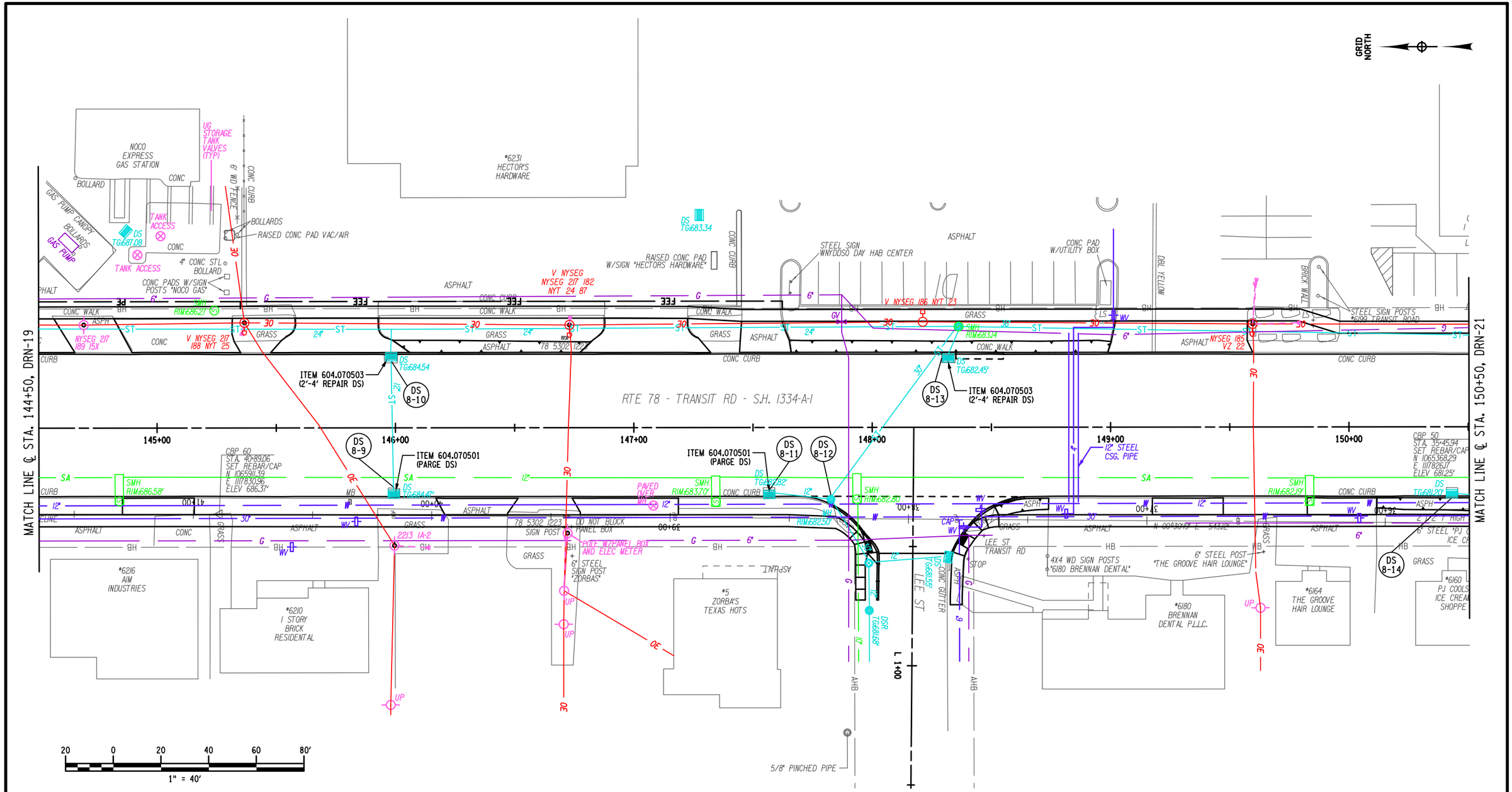

AFFIX SEAL:
ON:

ALTERED BY:
ON:

D264571

STATE OF NEW YORK · ROBERT F. SCHALLER · LICENSED PROFESSIONAL ENGINEER · NO. 082465

NOTES:

1. REFER TO DWGS. DTB-1 TO DTB-2 FOR PROPOSED DRAINAGE TABLE.
2. REFER TO DWG. DTB-3 FOR DRAINAGE REPAIR/ALTER TABLES.
3. REFER TO DWGS. DDT-1 TO DDT-3 FOR DRAINAGE DETAILS.

AS-BUILT REVISIONS
DESCRIPTION OF ALTERATIONS:

NY 78, TRANSIT ROAD, S.H. 1334A-1
FRENCH ROAD TO WEHRLE DRIVE
TOWNS OF CHEEKTOWAGA & LANCASTER
VILLAGE OF DEPEW
COUNTY: ERIE REGION: 05

PIN 5813.61
NY 78
UTILITY QUALITY LEVEL D

BRIDGES

CULVERTS

ALL DIMENSIONS IN ft UNLESS OTHERWISE NOTED

DRAINAGE PLANS
STA. 144+50 TO STA. 150+50

CONTRACT NUMBER
D264571

DRAWING NO. DRN-20
SHEET NO. 343

IT IS A VIOLATION OF LAW FOR ANY PERSON, UNLESS THEY ARE ACTING UNDER THE DIRECTION OF A LICENSED PROFESSIONAL ENGINEER, ARCHITECT, LANDSCAPE ARCHITECT, OR LAND SURVEYOR, TO ALTER AN ITEM IN ANY WAY. IF AN ITEM BEARING THE STAMP OF A LICENSED PROFESSIONAL IS ALTERED, THE ALTERING ENGINEER, ARCHITECT, LANDSCAPE ARCHITECT, OR LAND SURVEYOR SHALL STAMP THE DOCUMENT AND INCLUDE THE NOTATION "ALTERED BY" FOLLOWED BY THEIR SIGNATURE, THE DATE OF SUCH ALTERATION, AND A SPECIFIC DESCRIPTION OF THE ALTERATION.

NEW YORK STATE OF OPPORTUNITY. Department of Transportation

PROJECT MANAGER S. S. VAIDYA
CHECK R. F. SCHALLER
DRAFTING C. L. CRITES
DESIGN C. L. CRITES
JOB MANAGER R. F. SCHALLER
DESIGN SUPERVISOR S. S. VAIDYA

FILE NAME = 581361_CPH_HWY_DRN-20.dgn
DATE/TIME = 22-JUN-2021 12:52
USER = cc-rtes

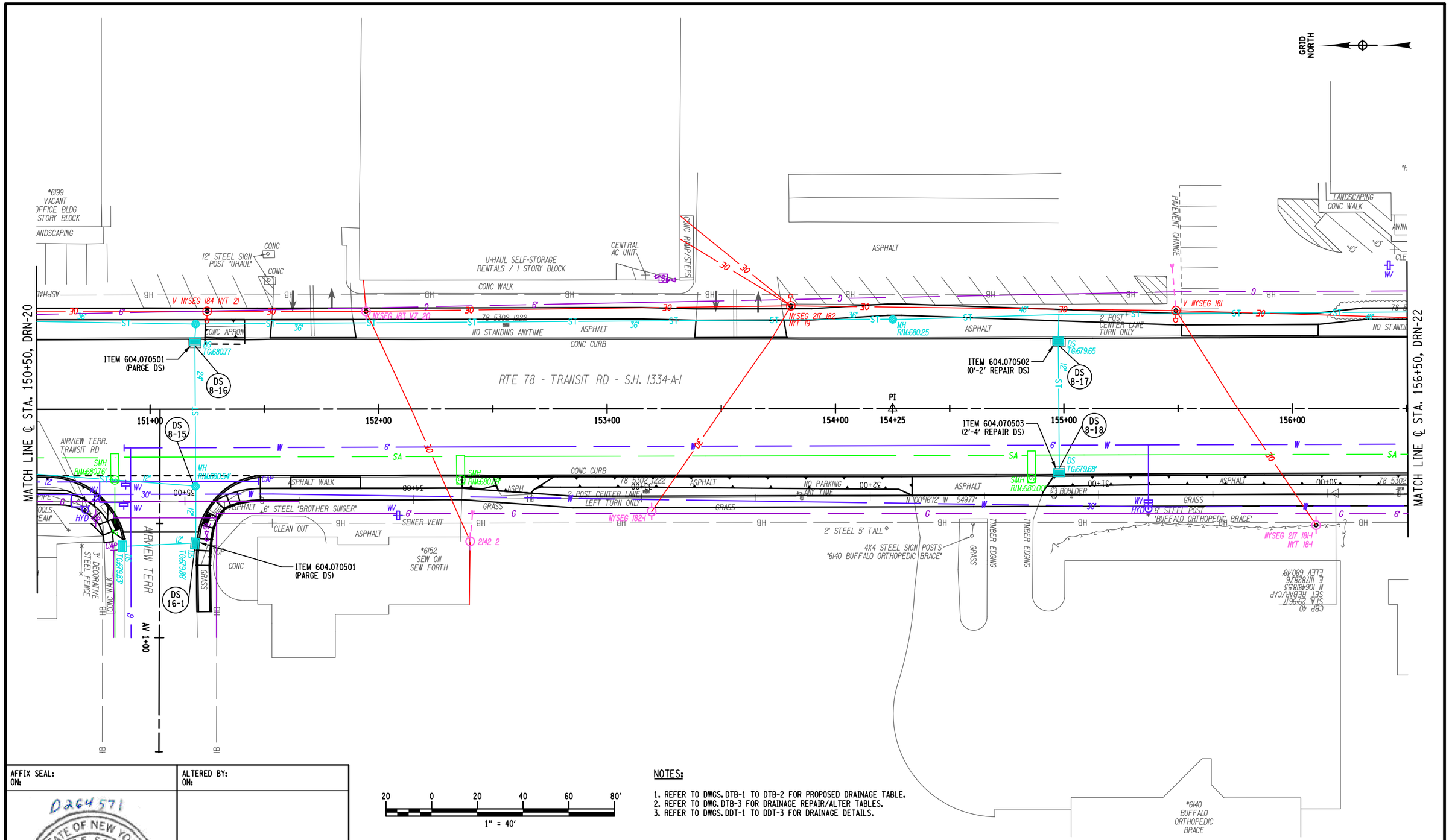

AFFIX SEAL: ON:	ALTERED BY: ON:
D264571 STATE OF NEW YORK ROBERT F. SCHALLER LICENSED PROFESSIONAL ENGINEER NO. 082465	

20 0 20 40 60 80'
1" = 40'

NOTES:

1. REFER TO DWGS. DTB-1 TO DTB-2 FOR PROPOSED DRAINAGE TABLE.
2. REFER TO DWG. DTB-3 FOR DRAINAGE REPAIR/ALTER TABLES.
3. REFER TO DWGS. DDT-1 TO DDT-3 FOR DRAINAGE DETAILS.

AS-BUILT REVISIONS DESCRIPTION OF ALTERATIONS:	NY 78, TRANSIT ROAD, S.H. 1334A-1	PIN 5813.61	BRIDGES	CULVERTS	ALL DIMENSIONS IN ft UNLESS OTHERWISE NOTED	CONTRACT NUMBER
	FRENCH ROAD TO WEHRLE DRIVE	NY 78			DRAINAGE PLANS STA. 150+50 TO STA. 156+50	D264571
	TOWNS OF CHEEKTOWAGA & LANCASTER	UTILITY QUALITY LEVEL D				DRAWING NO. DRN-21
	VILLAGE OF DEPEW					SHEET NO. 344
	COUNTY: ERIE REGION: 05					

IT IS A VIOLATION OF LAW FOR ANY PERSON, UNLESS THEY ARE ACTING UNDER THE DIRECTION OF A LICENSED PROFESSIONAL ENGINEER, ARCHITECT, LANDSCAPE ARCHITECT, OR LAND SURVEYOR, TO ALTER AN ITEM IN ANY WAY. IF AN ITEM BEARING THE STAMP OF A LICENSED PROFESSIONAL IS ALTERED, THE ALTERING ENGINEER, ARCHITECT, LANDSCAPE ARCHITECT, OR LAND SURVEYOR SHALL STAMP THE DOCUMENT AND INCLUDE THE NOTATION "ALTERED BY" FOLLOWED BY THEIR SIGNATURE, THE DATE OF SUCH ALTERATION, AND A SPECIFIC DESCRIPTION OF THE ALTERATION.

NEW YORK STATE OF OPPORTUNITY. Department of Transportation

PROJECT MANAGER S. S. VAIDYA
CHECK R. F. SCHALLER
DRAFTING C. L. CRITES
DESIGN C. L. CRITES
JOB MANAGER R. F. SCHALLER
DESIGN SUPERVISOR S. S. VAIDYA
FILE NAME = 581361_CPH_HWY_DRN-21.dgn
DATE/TIME = 22-JUN-2021 12:52
USER = cartes

PROJECT MANAGER S. S. VAIDYA
CHECK R. F. SCHALLER
DRAFTING C. L. CRITES
DESIGN C. L. CRITES
JOB MANAGER R. F. SCHALLER
DESIGN SUPERVISOR S. S. VAIDYA

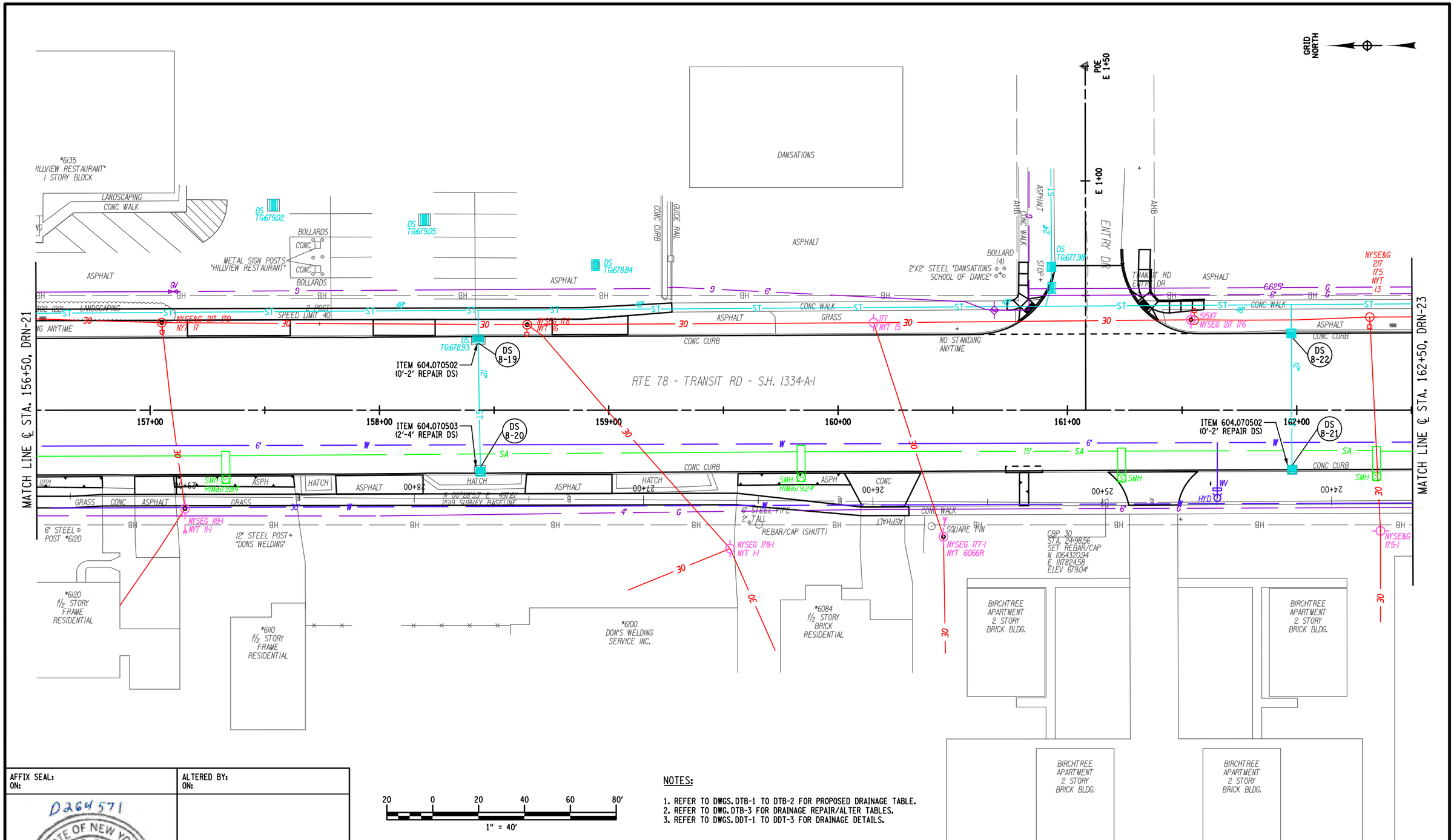

AFFIX SEAL:
ON:

ALTERED BY:
ON:

D264571

STATE OF NEW YORK
ROBERT F. SCHALLER
NO. 082465
LICENSED PROFESSIONAL ENGINEER

20 0 20 40 60 80'
1" = 40'

NOTES:

1. REFER TO DWGS. DTB-1 TO DTB-2 FOR PROPOSED DRAINAGE TABLE.
2. REFER TO DWG. DTB-3 FOR DRAINAGE REPAIR/ALTER TABLES.
3. REFER TO DWGS. DDT-1 TO DDT-3 FOR DRAINAGE DETAILS.

AS-BUILT REVISIONS
DESCRIPTION OF ALTERATIONS:

NY 78, TRANSIT ROAD, S.H. 1334A-1
FRENCH ROAD TO WEHRLE DRIVE
TOWNS OF CHEEKTOWAGA & LANCASTER
VILLAGE OF DEPEW
COUNTY: ERIE REGION: 05

PIN 5813.61
NY 78
UTILITY QUALITY LEVEL D

BRIDGES

CULVERTS

ALL DIMENSIONS IN ft UNLESS OTHERWISE NOTED

DRAINAGE PLANS
STA. 156+50 TO STA. 162+50

CONTRACT NUMBER
D264571

DRAWING NO. DRN-22
SHEET NO. 345

IT IS A VIOLATION OF LAW FOR ANY PERSON, UNLESS THEY ARE ACTING UNDER THE DIRECTION OF A LICENSED PROFESSIONAL ENGINEER, ARCHITECT, LANDSCAPE ARCHITECT, OR LAND SURVEYOR, TO ALTER AN ITEM IN ANY WAY. IF AN ITEM BEARING THE STAMP OF A LICENSED PROFESSIONAL IS ALTERED, THE ALTERING ENGINEER, ARCHITECT, LANDSCAPE ARCHITECT, OR LAND SURVEYOR SHALL STAMP THE DOCUMENT AND INCLUDE THE NOTATION "ALTERED BY" FOLLOWED BY THEIR SIGNATURE, THE DATE OF SUCH ALTERATION, AND A SPECIFIC DESCRIPTION OF THE ALTERATION.

NEW YORK STATE OF OPPORTUNITY. Department of Transportation

FILE NAME = 581361_CPH_HWY_DRN-22.dgn
DATE/TIME = 22-JUN-2021 12:52
USER = cc1t6s

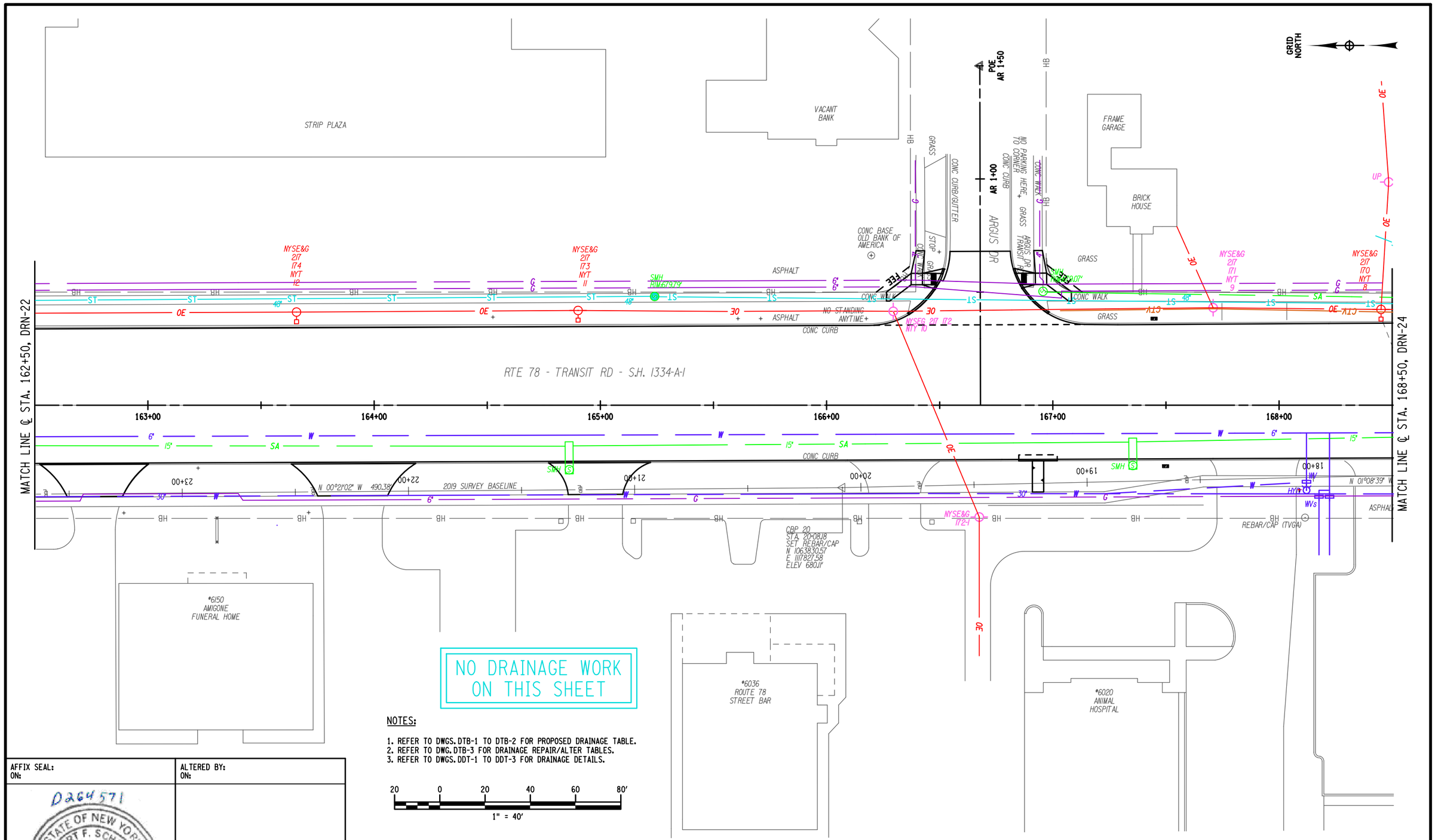

NOTES:

1. REFER TO DWGS. DTB-1 TO DTB-2 FOR PROPOSED DRAINAGE TABLE.
2. REFER TO DWG. DTB-3 FOR DRAINAGE REPAIR/ALTER TABLES.
3. REFER TO DWGS. DDT-1 TO DDT-3 FOR DRAINAGE DETAILS.

AFFIX SEAL:
ON:

D264571
STATE OF NEW YORK
ROBERT F. SCHALLER
NO. 082465
LICENSED PROFESSIONAL ENGINEER

ALTERED BY:
ON:

AS-BUILT REVISIONS
DESCRIPTION OF ALTERATIONS:

NY 78, TRANSIT ROAD, S.H. 1334A-1	PIN 5813.61	BRIDGES	CULVERTS	ALL DIMENSIONS IN ft UNLESS OTHERWISE NOTED
FRENCH ROAD TO WEHRLE DRIVE	NY 78			DRAINAGE PLANS
TOWNS OF CHEEKTOWAGA & LANCASTER	UTILITY QUALITY LEVEL D			STA. 162+50 TO STA. 168+50
VILLAGE OF DEPEW				
COUNTY: ERIE REGION: 05				

CONTRACT NUMBER
D264571

DRAWING NO. DRN-23
SHEET NO. 346

IT IS A VIOLATION OF LAW FOR ANY PERSON, UNLESS THEY ARE ACTING UNDER THE DIRECTION OF A LICENSED PROFESSIONAL ENGINEER, ARCHITECT, LANDSCAPE ARCHITECT, OR LAND SURVEYOR, TO ALTER AN ITEM IN ANY WAY. IF AN ITEM BEARING THE STAMP OF A LICENSED PROFESSIONAL IS ALTERED, THE ALTERING ENGINEER, ARCHITECT, LANDSCAPE ARCHITECT, OR LAND SURVEYOR SHALL STAMP THE DOCUMENT AND INCLUDE THE NOTATION "ALTERED BY" FOLLOWED BY THEIR SIGNATURE, THE DATE OF SUCH ALTERATION, AND A SPECIFIC DESCRIPTION OF THE ALTERATION.

NEW YORK STATE OF OPPORTUNITY. Department of Transportation

PROJECT MANAGER S. S. VAIDYA
CHECK R. F. SCHALLER
DRAFTING C. L. CRITES
CHECK R. F. SCHALLER
DESIGN C. L. CRITES
JOB MANAGER R. F. SCHALLER
DESIGN SUPERVISOR S. S. VAIDYA

FILE NAME = 581361_CPH_HWY_DRN-23.dgn
DATE/TIME = 22-JUN-2021 12:52
USER = cornites

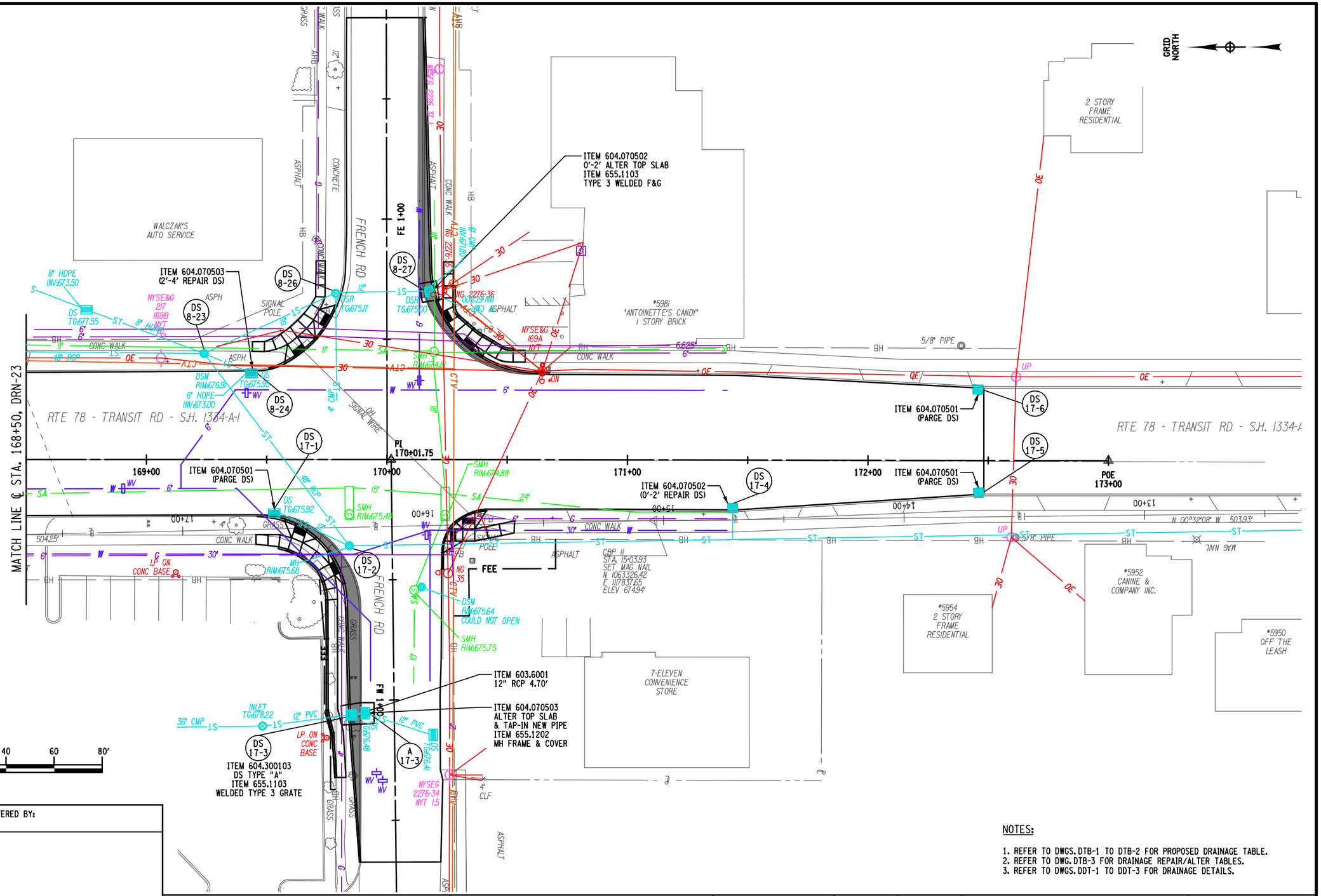

NOTES:

1. REFER TO DWGS. DTB-1 TO DTB-2 FOR PROPOSED DRAINAGE TABLE.
2. REFER TO DWG. DTB-3 FOR DRAINAGE REPAIR/ALTER TABLES.
3. REFER TO DWGS. DDT-1 TO DDT-3 FOR DRAINAGE DETAILS.

AFFIX SEAL: ON:

ALTERED BY: ON:

D264571

STATE OF NEW YORK · ROBERT F. SCHALLER · NO. 082465 · LICENSED PROFESSIONAL ENGINEER

AS-BUILT REVISIONS
DESCRIPTION OF ALTERATIONS:

NY 78, TRANSIT ROAD, S.H. 1334A-1
FRENCH ROAD TO WEHRLE DRIVE
TOWNS OF CHEEKTOWAGA & LANCASTER
VILLAGE OF DEPEW
COUNTY: ERIE REGION: 05

PIN 5813.61
NY 78
UTILITY QUALITY LEVEL D

BRIDGES

CULVERTS

ALL DIMENSIONS IN ft UNLESS OTHERWISE NOTED

DRAINAGE PLANS
STA. 168+50 TO STA. 174+50

CONTRACT NUMBER D264571

DRAWING NO. DRN-24
SHEET NO. 347

IT IS A VIOLATION OF LAW FOR ANY PERSON, UNLESS THEY ARE ACTING UNDER THE DIRECTION OF A LICENSED PROFESSIONAL ENGINEER, ARCHITECT, LANDSCAPE ARCHITECT, OR LAND SURVEYOR, TO ALTER AN ITEM IN ANY WAY. IF AN ITEM BEARING THE STAMP OF A LICENSED PROFESSIONAL IS ALTERED, THE ALTERING ENGINEER, ARCHITECT, LANDSCAPE ARCHITECT, OR LAND SURVEYOR SHALL STAMP THE DOCUMENT AND INCLUDE THE NOTATION "ALTERED BY" FOLLOWED BY THEIR SIGNATURE, THE DATE OF SUCH ALTERATION, AND A SPECIFIC DESCRIPTION OF THE ALTERATION.

NEW YORK STATE OF OPPORTUNITY. Department of Transportation

DESIGN SUPERVISOR S. S. VAIDYA
JOB MANAGER R. F. SCHALLER
DESIGN P. M. LAUGEMAN
CHECK R. F. SCHALLER
DRAFTING P. M. LAUGEMAN
CHECK R. F. SCHALLER
PROJECT MANAGER S. S. VAIDYA

FILE NAME = 581361_CPH_HWY_DRN-24.dgn
DATE/TIME = 22-JUN-2021 12:52
USER = corites

PROJECT MANAGER S. S. VAIDYA
CHECK R. F. SCHALLER
DRAFTING C. L. CRITES
CHECK R. F. SCHALLER
DESIGN C. L. CRITES
JOB MANAGER R. F. SCHALLER
DESIGN SUPERVISOR S. S. VAIDYA

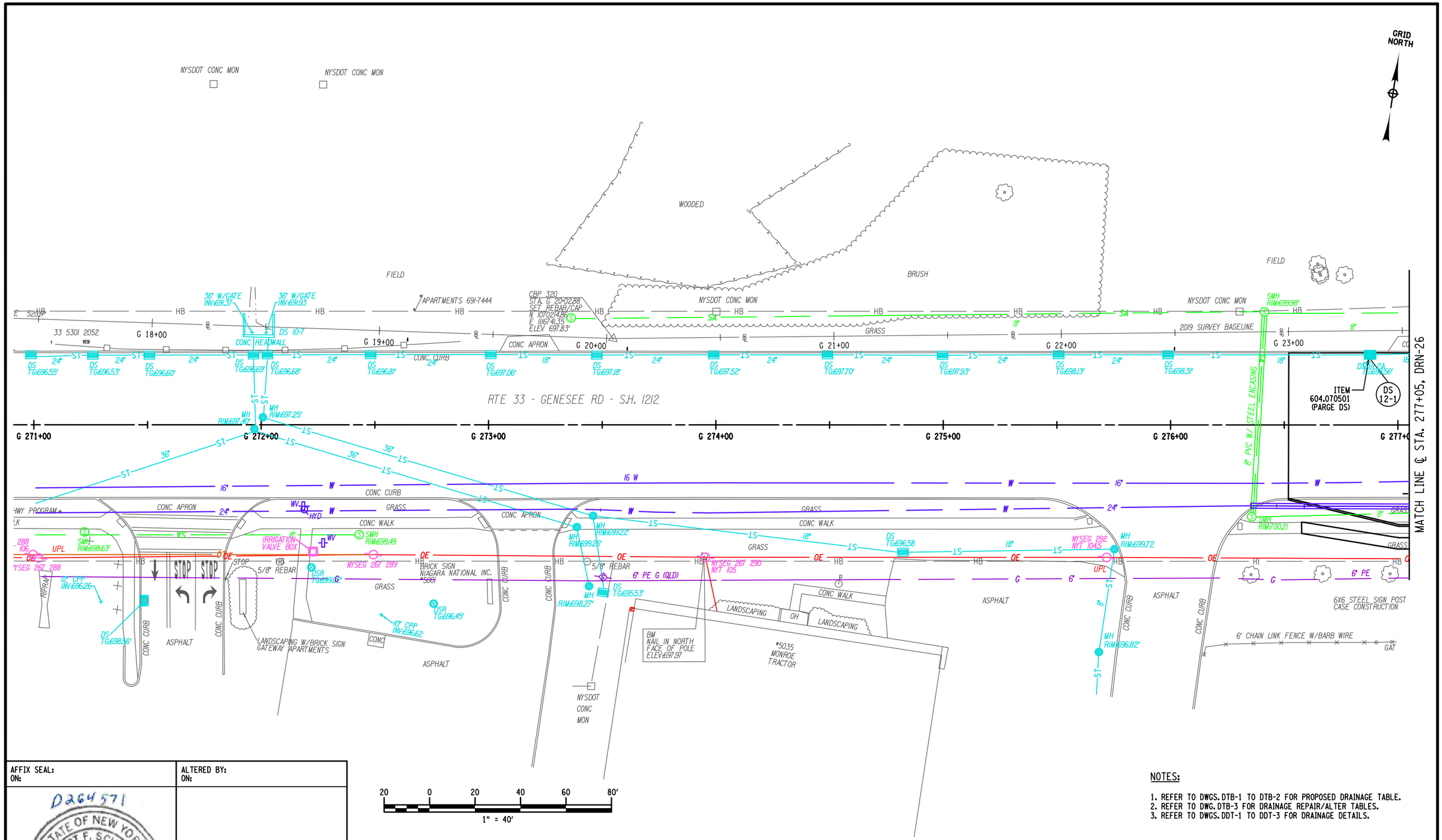

NOTES:

1. REFER TO DWGS. DTB-1 TO DTB-2 FOR PROPOSED DRAINAGE TABLE.
2. REFER TO DWG. DTB-3 FOR DRAINAGE REPAIR/ALTER TABLES.
3. REFER TO DWGS. DDT-1 TO DDT-3 FOR DRAINAGE DETAILS.

AFFIX SEAL:
ON:

D264571
STATE OF NEW YORK
ROBERT F. SCHALLER
NO. 082465
LICENSED PROFESSIONAL ENGINEER

ALTERED BY:
ON:

AS-BUILT REVISIONS
DESCRIPTION OF ALTERATIONS:

NY 78, TRANSIT ROAD, S.H. 1334A-1	PIN 5813.61	BRIDGES	CULVERTS	ALL DIMENSIONS IN ft UNLESS OTHERWISE NOTED
FRENCH ROAD TO WEHRLE DRIVE	NY 78			DRAINAGE PLANS
TOWNS OF CHEEKTOWAGA & LANCASTER	UTILITY QUALITY LEVEL D			STA G 270+91 TO STA G 277+05
VILLAGE OF DEPEW				
COUNTY: ERIE REGION: 05				

CONTRACT NUMBER
D264571

DRAWING NO. DRN-25
SHEET NO. 348

IT IS A VIOLATION OF LAW FOR ANY PERSON, UNLESS THEY ARE ACTING UNDER THE DIRECTION OF A LICENSED PROFESSIONAL ENGINEER, ARCHITECT, LANDSCAPE ARCHITECT, OR LAND SURVEYOR, TO ALTER AN ITEM IN ANY WAY. IF AN ITEM BEARING THE STAMP OF A LICENSED PROFESSIONAL IS ALTERED, THE ALTERING ENGINEER, ARCHITECT, LANDSCAPE ARCHITECT, OR LAND SURVEYOR SHALL STAMP THE DOCUMENT AND INCLUDE THE NOTATION "ALTERED BY" FOLLOWED BY THEIR SIGNATURE, THE DATE OF SUCH ALTERATION, AND A SPECIFIC DESCRIPTION OF THE ALTERATION.

NEW YORK STATE OF OPPORTUNITY. Department of Transportation

FILE NAME = 581361_CPH_HWY_DRN-25.dgn
DATE/TIME = 22-JUN-2021 12:52
USER = cc1tes

PROJECT MANAGER S. S. VAIDYA
CHECK R. F. SCHALLER
DRAFTING P. M. LAUGEMAN
CHECK R. F. SCHALLER
DESIGN P. M. LAUGEMAN
JOB MANAGER R. F. SCHALLER
DESIGN SUPERVISOR S. S. VAIDYA

FILE NAME = 581361_CPH_HWY_DRN-26.dgn
DATE/TIME = 22-JUN-2021 12:52
USER = corites

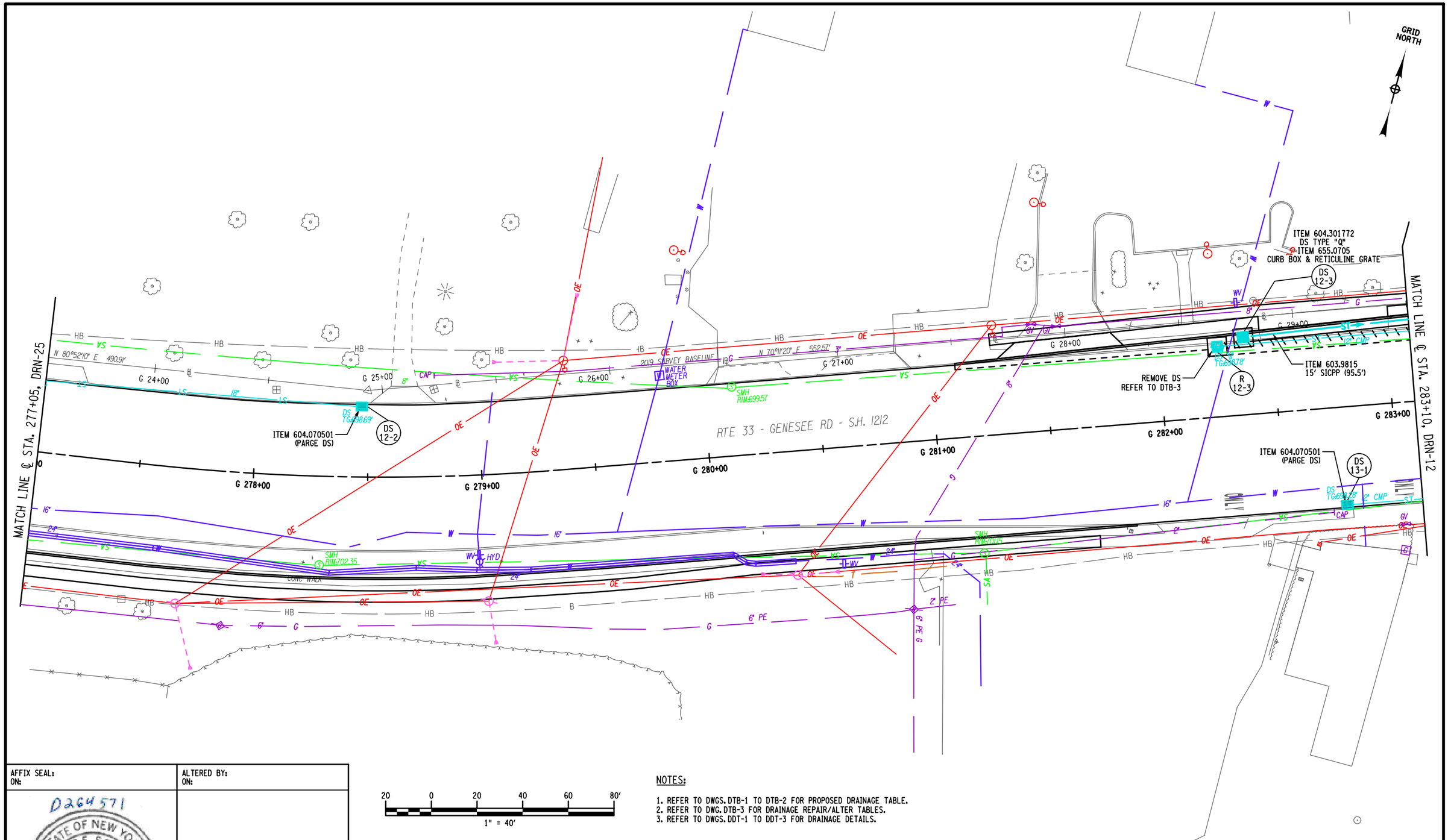

20 0 20 40 60 80'
1" = 40'

NOTES:

1. REFER TO DWGS. DTB-1 TO DTB-2 FOR PROPOSED DRAINAGE TABLE.
2. REFER TO DWG. DTB-3 FOR DRAINAGE REPAIR/ALTER TABLES.
3. REFER TO DWGS. DDT-1 TO DDT-3 FOR DRAINAGE DETAILS.

AFFIX SEAL:
ON:

ALTERED BY:
ON:

D264571
STATE OF NEW YORK
ROBERT F. SCHALLER
NO. 082465
LICENSED PROFESSIONAL ENGINEER

AS-BUILT REVISIONS
DESCRIPTION OF ALTERATIONS:

NY 78, TRANSIT ROAD, S.H. 1334A-1
FRENCH ROAD TO WEHRLE DRIVE
TOWNS OF CHEEKTOWAGA & LANCASTER
VILLAGE OF DEPEW
COUNTY: ERIE REGION: 05

PIN 5813.61
NY 78
UTILITY QUALITY LEVEL D

BRIDGES

CULVERTS

ALL DIMENSIONS IN ft UNLESS OTHERWISE NOTED

DRAINAGE PLANS
STA. 277+05 TO STA. 283+10

CONTRACT NUMBER
D264571

DRAWING NO. DRN-26
SHEET NO. 349

IT IS A VIOLATION OF LAW FOR ANY PERSON, UNLESS THEY ARE ACTING UNDER THE DIRECTION OF A LICENSED PROFESSIONAL ENGINEER, ARCHITECT, LANDSCAPE ARCHITECT, OR LAND SURVEYOR, TO ALTER AN ITEM IN ANY WAY. IF AN ITEM BEARING THE STAMP OF A LICENSED PROFESSIONAL IS ALTERED, THE ALTERING ENGINEER, ARCHITECT, LANDSCAPE ARCHITECT, OR LAND SURVEYOR SHALL STAMP THE DOCUMENT AND INCLUDE THE NOTATION "ALTERED BY" FOLLOWED BY THEIR SIGNATURE, THE DATE OF SUCH ALTERATION, AND A SPECIFIC DESCRIPTION OF THE ALTERATION.

NEW YORK STATE OF OPPORTUNITY. Department of Transportation

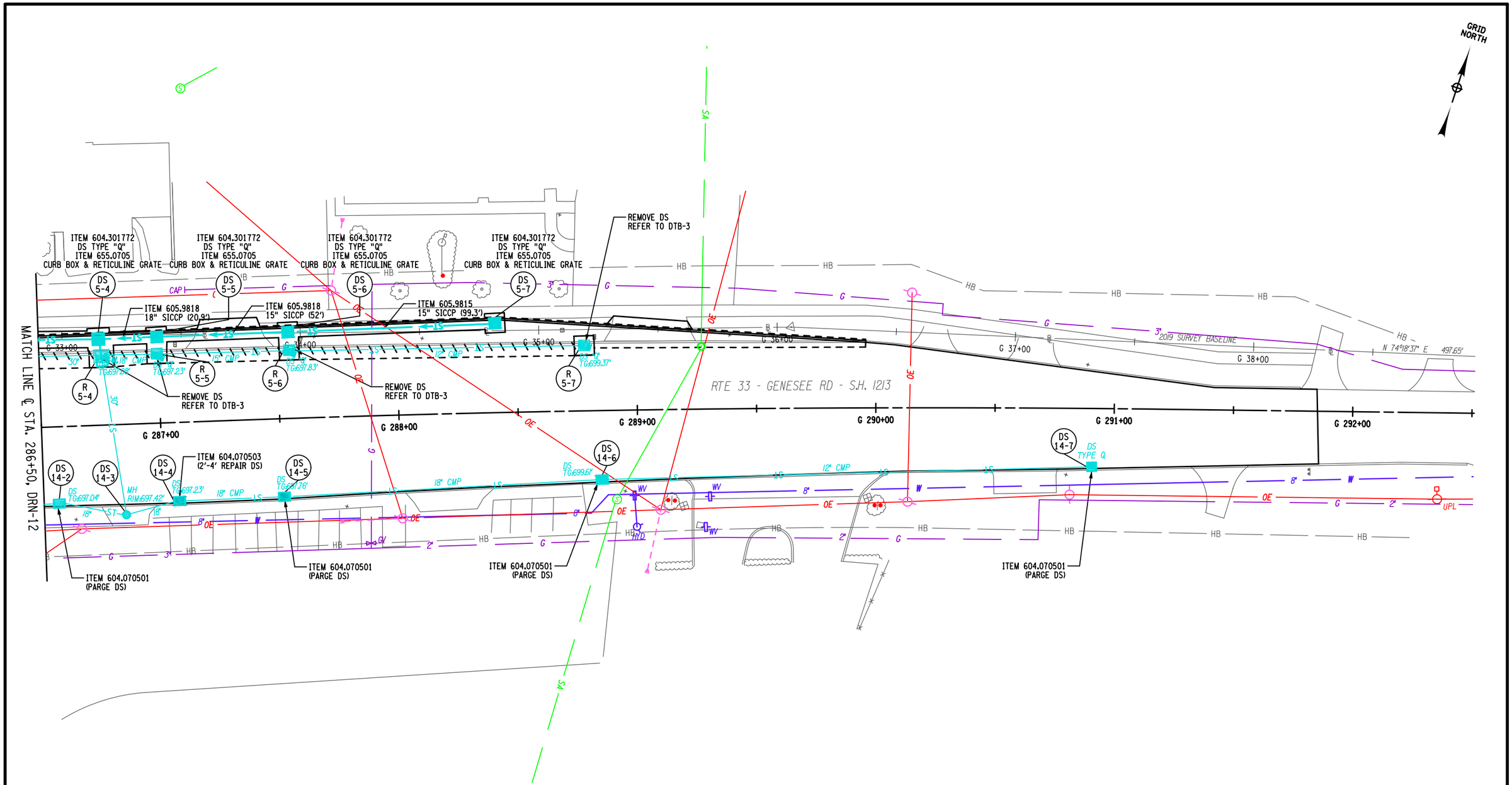

AFFIX SEAL: ON:	ALTERED BY: ON:
D264571 STATE OF NEW YORK ROBERT F. SCHALLER NO. 082465 LICENSED PROFESSIONAL ENGINEER	

20 0 20 40 60 80'

1" = 40'

NOTES:

1. REFER TO DWGS. DTB-1 TO DTB-2 FOR PROPOSED DRAINAGE TABLE.
2. REFER TO DWG. DTB-3 FOR DRAINAGE REPAIR/ALTER TABLES.
3. REFER TO DWGS. DDT-1 TO DDT-3 FOR DRAINAGE DETAILS.

AS-BUILT REVISIONS DESCRIPTION OF ALTERATIONS:	NY 78, TRANSIT ROAD, S.H. 1334A-1	PIN 5813.61 NY 78 UTILITY QUALITY LEVEL D	BRIDGES	CULVERTS	ALL DIMENSIONS IN ft UNLESS OTHERWISE NOTED	CONTRACT NUMBER D264571
	FRENCH ROAD TO WEHRLE DRIVE				DRAINAGE PLANS STA. 286+50 TO STA. 292+50	DRAWING NO. DRN-27
	TOWNS OF CHEEKTOWAGA & LANCASTER					SHEET NO. 350
	VILLAGE OF DEPEW					
	COUNTY: ERIE REGION: 05					

IT IS A VIOLATION OF LAW FOR ANY PERSON, UNLESS THEY ARE ACTING UNDER THE DIRECTION OF A LICENSED PROFESSIONAL ENGINEER, ARCHITECT, LANDSCAPE ARCHITECT, OR LAND SURVEYOR, TO ALTER AN ITEM IN ANY WAY. IF AN ITEM BEARING THE STAMP OF A LICENSED PROFESSIONAL IS ALTERED, THE ALTERING ENGINEER, ARCHITECT, LANDSCAPE ARCHITECT, OR LAND SURVEYOR SHALL STAMP THE DOCUMENT AND INCLUDE THE NOTATION "ALTERED BY" FOLLOWED BY THEIR SIGNATURE, THE DATE OF SUCH ALTERATION, AND A SPECIFIC DESCRIPTION OF THE ALTERATION.

NEW YORK STATE OF OPPORTUNITY. Department of Transportation

PROJECT MANAGER S. S. VAIDYA
CHECK R. F. SCHALLER
DRAFTING P. M. LAUGEMAN
CHECK R. F. SCHALLER
DESIGN P. M. LAUGEMAN
JOB MANAGER R. F. SCHALLER
DESIGN SUPERVISOR S. S. VAIDYA

FILE NAME = 581361_CPH_HWY_DRN-27.dgn
DATE/TIME = 22-JUN-2021 12:52
USER = ccrtes

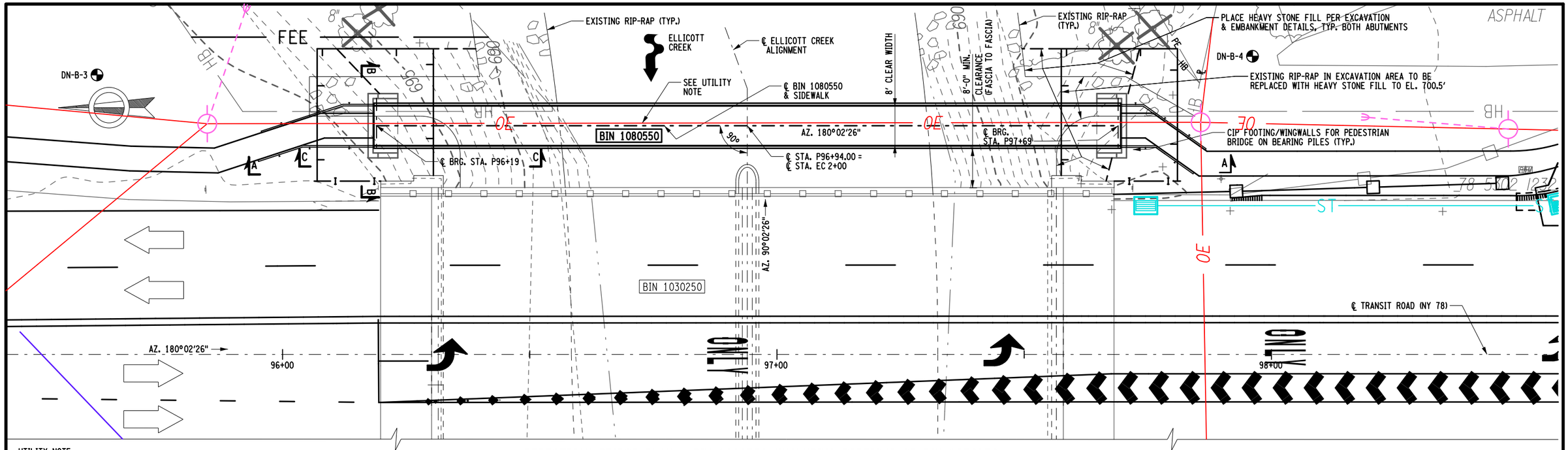

PEDESTRIAN BRIDGE PLAN - BIN 1080550 (INCLUDING PORTIONS OF BIN 1030250)

UTILITY NOTE:

TO ACCOMODATE CRANE EQUIPMENT LEADS DURING INSTALLATION OF INTERIM SHEETING, PILES AND PREFABRICATED BRIDGE IN ADDITION TO EXCAVATION AND BACKFILL OPERATIONS IN PROXIMITY TO UTILITY POLES, REFER TO UTILITY PLANS (DWG. NO. UTL-11 TO 12) REGARDING INFORMATION RELATED TO THE ELECTRIC LINE DEENERGIZATION AND/OR MODIFICATION PLAN, TEMPORARY OR PERMANENT POLE RELOCATION & POLE SUPPORT PLAN.

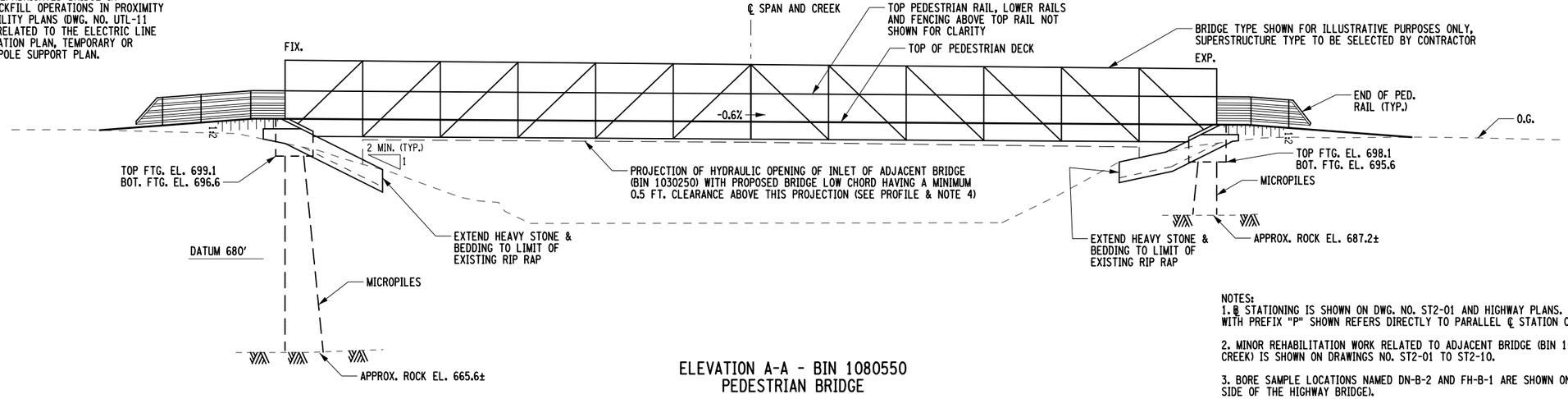

ELEVATION A-A - BIN 1080550
PEDESTRIAN BRIDGE

NOTES:

1. ℄ STATIONING IS SHOWN ON DWG. NO. ST2-01 AND HIGHWAY PLANS. PEDESTRIAN BRIDGE STATIONING WITH PREFIX "P" SHOWN REFERS DIRECTLY TO PARALLEL ℄ STATION OF HIGHWAY BUT OFFSET AS SHOWN.

2. MINOR REHABILITATION WORK RELATED TO ADJACENT BRIDGE (BIN 1030250, NY 78 OVER ELLICOTT CREEK) IS SHOWN ON DRAWINGS NO. ST2-01 TO ST2-10.

3. BORE SAMPLE LOCATIONS NAMED DN-B-2 AND FH-B-1 ARE SHOWN ON DWG. NO. ST2-01 (ON THE WEST SIDE OF THE HIGHWAY BRIDGE).

4. SCOUR ELEVATION AT EACH ABUTMENT IS THE SAME AS THE APPROXIMATE ROCK ELEVATION SHOWN AT THE RESPECTIVE ABUTMENT. THE PROPOSED PEDESTRIAN STRUCTURE IS POSITIONED ABOVE THE INLET LOW CHORD ELEVATION OF THE ADJACENT BRIDGE (BIN 1030250) AS COMPARED TO THE ADJACENT STRUCTURE, THEREFORE HYDRAULIC PERFORMANCE AT THE SITE IS CONTROLLED BY BIN 1030250 (HENCE HYDRAULIC DATA TABLE NOT SHOWN).

5. VEHICULAR LOADS ARE NOT ALLOWED ON PEDESTRIAN STRUCTURE AND ARE PHYSICALLY PREVENTED FROM ENTERING STRUCTURE HENCE VEHICULAR LOAD RATING TABLE IS NEITHER SHOWN NOR REQUIRED (SEE GENERAL NOTES DWG. ST1-05 REGARDING BRIDGE ENTRY WIDTH REQUIREMENT).

6. SEE DWG. NO. ST1-02 FOR SECTIONS B-B AND VIEW C-C.

10 0 10 20 30 40'

AFFIX SEAL:
ON:

ALTERED BY:
ON:

STATE OF NEW YORK
GEOFFREY ROBERT GROSS
D264571
No. 079932
LICENSED PROFESSIONAL ENGINEER
June 16, 2021

AS-BUILT REVISIONS
DESCRIPTION OF ALTERATIONS:

TRANSIT ROAD, PART 4, SH1334-A-1	PIN 5813.61	BRIDGES	CULVERTS	ALL DIMENSIONS IN ft UNLESS OTHERWISE NOTED
NY ROUTE 78, TRANSIT ROAD	NY RTE 78	1080550		GENERAL BRIDGE PLAN AND ELEVATION
BIN 1030250 & 1080550 OVER ELLICOTT CREEK				PEDESTRIAN BRIDGE OVER ELLICOTT CREEK
TOWNS OF CHEEKTOWAGA AND LANCASTER				
COUNTY: ERIE REGION: 05				

CONTRACT NUMBER
D264571

DRAWING NO. ST1-01
SHEET NO. 351

IT IS A VIOLATION OF LAW FOR ANY PERSON, UNLESS THEY ARE ACTING UNDER THE DIRECTION OF A LICENSED PROFESSIONAL ENGINEER, ARCHITECT, LANDSCAPE ARCHITECT, OR LAND SURVEYOR, TO ALTER AN ITEM IN ANY WAY. IF AN ITEM BEARING THE STAMP OF A LICENSED PROFESSIONAL IS ALTERED, THE ALTERING ENGINEER, ARCHITECT, LANDSCAPE ARCHITECT, OR LAND SURVEYOR SHALL STAMP THE DOCUMENT AND INCLUDE THE NOTATION "ALTERED BY" FOLLOWED BY THEIR SIGNATURE, THE DATE OF SUCH ALTERATION, AND A SPECIFIC DESCRIPTION OF THE ALTERATION.

NEW YORK STATE OF OPPORTUNITY. Department of Transportation

PROJECT MANAGER R. SCHALLER
CHECK G. GROSS
DRAFTING B. SOKOL
CHECK G. GROSS
DESIGN S. FAIZI
JOB MANAGER G. GROSS
DESIGN SUPERVISOR N. DUENNEBACKE

FILE NAME = 581361_cpb_1080550_gen.dgn
DATE/TIME = 16-JUN-2021 15:57
USER = ggr-oss

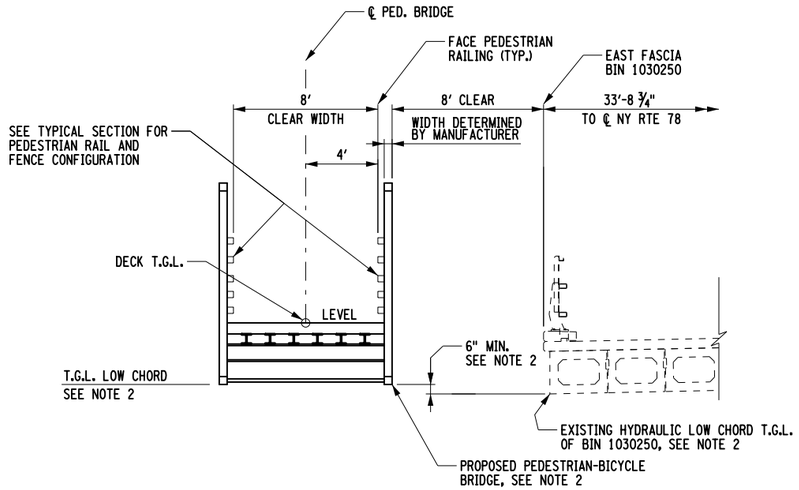

PROPOSED TYPICAL BRIDGE SECTION

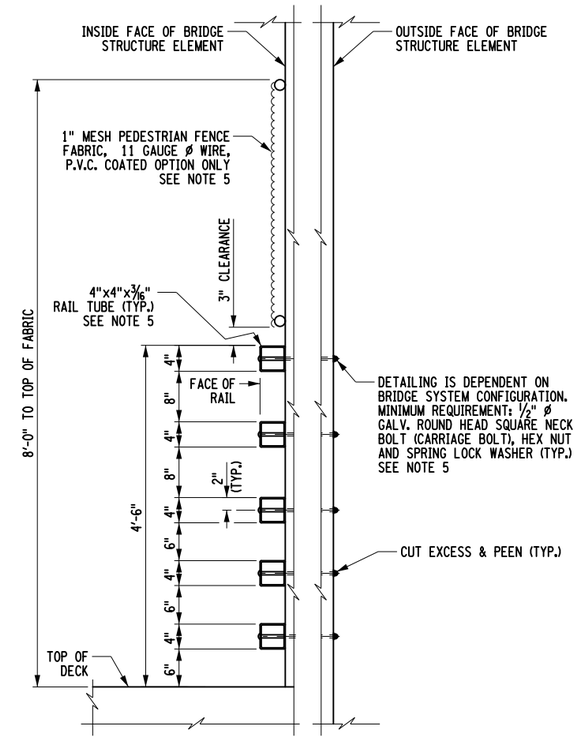

PROPOSED TYPICAL SECTION
RAIL/FENCE CONFIGURATION
NO SCALE

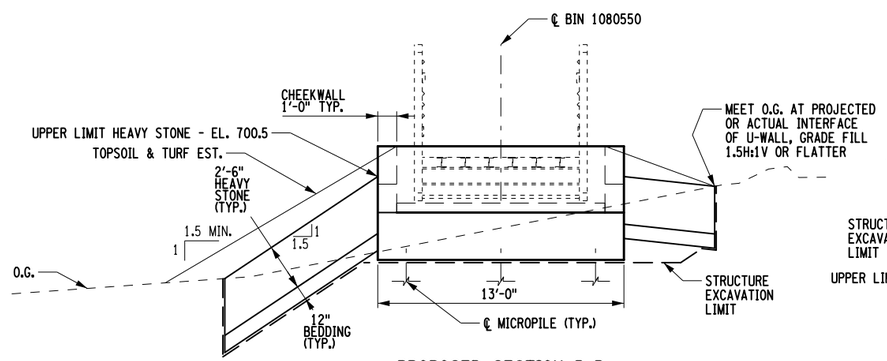

PROPOSED SECTION B-B
AT ABUTMENT

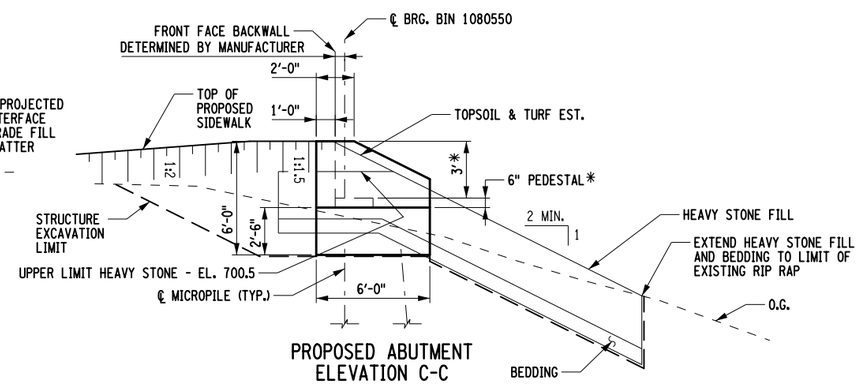

PROPOSED ABUTMENT
ELEVATION C-C

NOTES:

1. SEE DWG. NO. ST2-01 TO ST2-10 FOR REHABILITATION & DETAILS OF THE BRIDGE (BIN 1030250) SHOWN ADJACENT TO THE PROPOSED PEDESTRIAN BRIDGE.

2. INSTALL BIN 1080550 UNDER ITEM 564.80010016 - PREFABRICATED PEDESTRIAN-BICYCLE SUPERSTRUCTURE. SEE GENERAL NOTES ON DWG NO ST1-05 FOR PED-BIKE BRIDGE DESIGN CRITERIA (IN ADDITION TO SPECIFICATION REQUIREMENTS).

3. SEE DWG. NO. ST1-01 FOR LOCATIONS OF SECTION B-B AND VIEW C-C.

4. SEE DWG. NO. ST2-02 FOR PROFILE HYDRAULIC LOW CHORD T.G.L. OF BIN 1030250 ADJACENT TO BIN 1080550.

5. SEE DWG. NO. ST1-05 FOR PEDESTRIAN FENCE AND PEDESTRIAN RAIL NOTES.

4 0 4 8 12 16'

AFFIX SEAL:
ON:

ALTERED BY:
ON:

STATE OF NEW YORK
GEOFFREY ROBERT GROSS
D264571
No. 079932
LICENSED PROFESSIONAL ENGINEER
June 16, 2021

AS-BUILT REVISIONS
DESCRIPTION OF ALTERATIONS:

TRANSIT ROAD, PART 4, SH1334-A-1	PIN 5813.61	BRIDGES	CULVERTS	ALL DIMENSIONS IN ft UNLESS OTHERWISE NOTED
NY ROUTE 78, TRANSIT ROAD	NY RTE 78	1080550		TYPICAL BRIDGE TRANSVERSE SECTIONS
BIN 1030250 & 1080550 OVER ELLICOTT CREEK				PEDESTRIAN BRIDGE OVER ELLICOTT CREEK
TOWNS OF CHEEKTOWAGA AND LANCASTER				
COUNTY: ERIE REGION: 05				

CONTRACT NUMBER
D264571

DRAWING NO. ST1-02
SHEET NO. 352

IT IS A VIOLATION OF LAW FOR ANY PERSON, UNLESS THEY ARE ACTING UNDER THE DIRECTION OF A LICENSED PROFESSIONAL ENGINEER, ARCHITECT, LANDSCAPE ARCHITECT, OR LAND SURVEYOR, TO ALTER AN ITEM IN ANY WAY. IF AN ITEM BEARING THE STAMP OF A LICENSED PROFESSIONAL IS ALTERED, THE ALTERING ENGINEER, ARCHITECT, LANDSCAPE ARCHITECT, OR LAND SURVEYOR SHALL STAMP THE DOCUMENT AND INCLUDE THE NOTATION "ALTERED BY" FOLLOWED BY THEIR SIGNATURE, THE DATE OF SUCH ALTERATION, AND A SPECIFIC DESCRIPTION OF THE ALTERATION.

NEW YORK STATE OF OPPORTUNITY. Department of Transportation

PROJECT MANAGER R. SCHALLER
CHECK G. GROSS
DRAFTING B. SOKOL
CHECK G. GROSS
DESIGN S. FAIZI
JOB MANAGER G. GROSS
DESIGN SUPERVISOR N. DUENNEBACKE
FILE NAME = 581361_cpb_1080550_typ_sec.dgn
DATE/TIME = 16-JUN-2021 15:57
USER = ggross

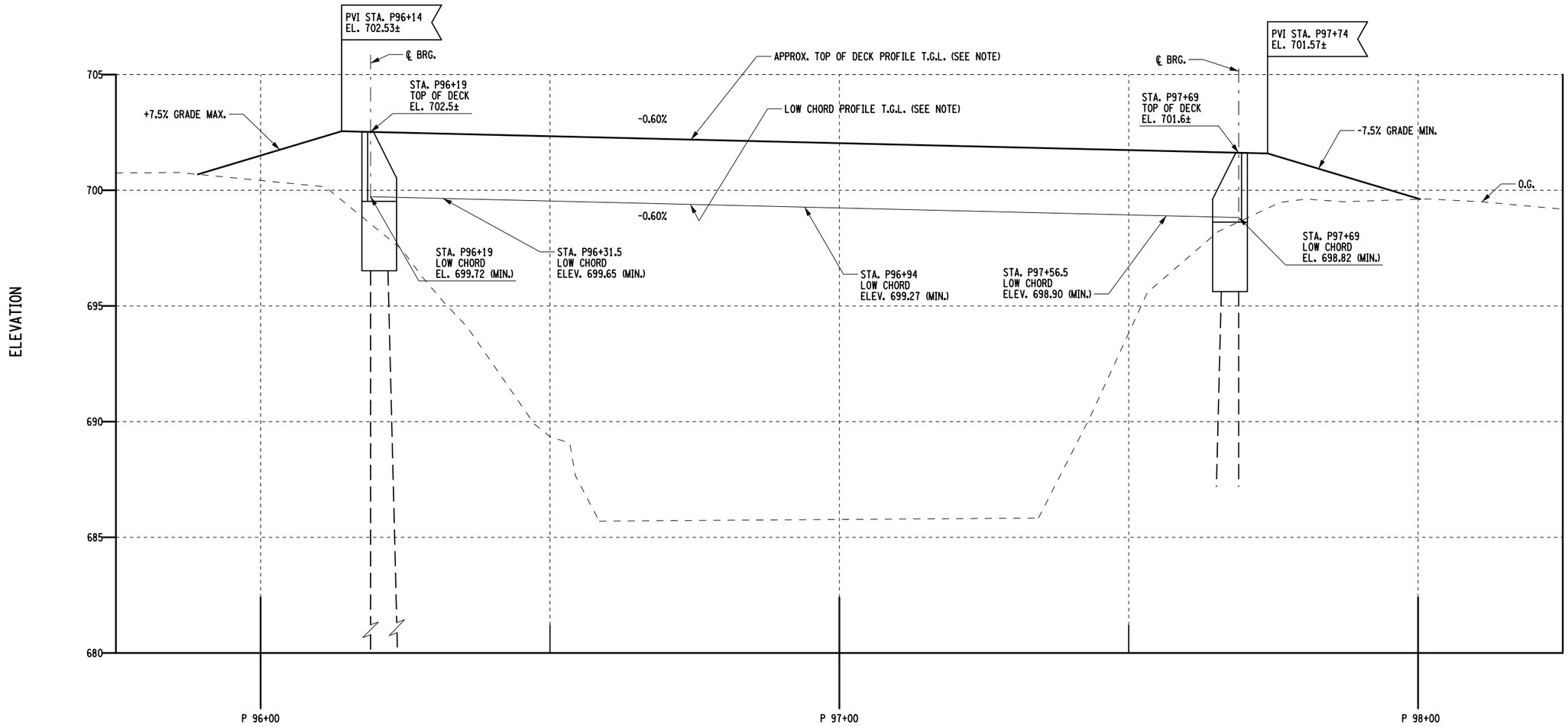

PROFILE - BIN 1080550 (PEDESTRIAN BRIDGE)

NOTE: LOW CHORD PROFILE OF PEDESTRIAN BRIDGE IS A MINIMUM ELEVATION REQUIREMENT. ADJUST BRIDGE SEAT ELEVATION AND/OR TOP OF DECK PROFILE TO OBTAIN A LOW CHORD PROFILE NO LOWER IN ELEVATION THAN THAT SHOWN. ADJUST APPROACH SIDEWALK PROFILE TO MEET A.D.A.A.G. REQUIREMENTS AS APPROVED BY ENGINEER. FIELD SURVEY ELEVATIONS OF THE EXISTING BRIDGE HYDRAULIC LOW CHORD AT THE FOLLOWING LOCATIONS WILL CONTROL PROPOSED PROFILE ELEVATIONS (SURVEY ELEVATIONS OF HYDRAULIC TGL SUPERCEDE ASSOCIATED ELEVATIONS SHOWN ON THE PLANS) :
1. BRIDGE BEGIN ABUTMENT STEM FACE (BIN 1030250)
2. AVERAGE AT NORTH AND SOUTH FACE OF PIER (BIN 1030250)
3. BRIDGE END ABUTMENT STEM FACE (BIN 1030250)

10 0 10 20 30 40'
1" = 20' (HOR. AND VERT.)

AFFIX SEAL:
ON:

ALTERED BY:
ON:

STATE OF NEW YORK
GEOFFREY ROBERT GROSS
D264571
No. 079932
LICENSED PROFESSIONAL ENGINEER
June 16, 2021

AS-BUILT REVISIONS
DESCRIPTION OF ALTERATIONS:

TRANSIT ROAD, PART 4, SH1334-A-1
NY ROUTE 78, TRANSIT ROAD
BIN 1030250 & 1080550 OVER ELLICOTT CREEK
TOWNS OF CHEEKTOWAGA AND LANCASTER
COUNTY: ERIE REGION: 05

PIN 5813.61
NY RTE 78

BRIDGES
1080550

CULVERTS

ALL DIMENSIONS IN ft UNLESS OTHERWISE NOTED

BRIDGE PROFILES

PEDESTRIAN BRIDGE
OVER
ELLICOTT CREEK

CONTRACT NUMBER
D264571

DRAWING NO. ST1-03
SHEET NO. 353

IT IS A VIOLATION OF LAW FOR ANY PERSON, UNLESS THEY ARE ACTING UNDER THE DIRECTION OF A LICENSED PROFESSIONAL ENGINEER, ARCHITECT, LANDSCAPE ARCHITECT, OR LAND SURVEYOR, TO ALTER AN ITEM IN ANY WAY. IF AN ITEM BEARING THE STAMP OF A LICENSED PROFESSIONAL IS ALTERED, THE ALTERING ENGINEER, ARCHITECT, LANDSCAPE ARCHITECT, OR LAND SURVEYOR SHALL STAMP THE DOCUMENT AND INCLUDE THE NOTATION "ALTERED BY" FOLLOWED BY THEIR SIGNATURE, THE DATE OF SUCH ALTERATION, AND A SPECIFIC DESCRIPTION OF THE ALTERATION.

NEW YORK STATE OF OPPORTUNITY. Department of Transportation

PROJECT MANAGER R. SCHALLER
CHECK G. GROSS
DRAFTING B. SOKOL
CHECK G. GROSS
DESIGN S. FAIZI
JOB MANAGER G. GROSS
DESIGN SUPERVISOR N. DUENNEBACKE
FILE NAME = 581361_cpb_1080550_pro.dgn
DATE/TIME = 16-JUN-2021 15:57
USER = ggross

ESTIMATE OF QUANTITIES - BIN 1080550

ITEM NO.	DESCRIPTION	UNIT	ESTIMATED	FINAL
203.03	EMBANKMENT IN PLACE	CY	145	
203.21	SELECT STRUCTURE FILL	CY	24	
206.01	STRUCTURE EXCAVATION	CY	95	
207.26	PREFABRICATED COMPOSITE STRUCTURAL DRAIN	SY	28	
551.40200017	FURNISHING EQUIPMENT FOR INSTALLING MICROPILES	LS	1	
551.99301217	MICROPILES (DESIGN PROVIDED) 12.75 INCH DIAMETER PIPE	LF	291	
551.99450017	PERMANENT CASING FOR MICROPILES	LF	291	
552.15	INTERIM STEEL SHEETING	SF	327	
555.08	FOOTING CONCRETE, CLASS HP	CY	15	
555.09	CONCRETE FOR STRUCTURES, CLASS HP	CY	7	
556.0202	EPOXY-COATED BAR REINFORCEMENT FOR STRUCTURES	LB	1606	
564.80010016	PREFABRICATED PEDESTRIAN-BICYCLE SUPERSTRUCTURE	EA	1	
568.84	PEDESTRIAN AND BICYCLE RAILING (FIVE-RAIL)	LF	78	
620.05	STONE FILLING (HEAVY)	CY	67	
620.0801	BEDDING MATERIAL, TYPE 1	CY	14	
620.0802	BEDDING MATERIAL, TYPE 2	CY	14	

THIS ESTIMATE OF QUANTITIES DOES NOT NECESSARILY INCLUDE ALL ITEMS IN THE BRIDGE FISCAL SHARE.

INDEX - NEW BRIDGE - BIN 1080550

PEDESTRIAN BRIDGE OVER ELLICOTT CREEK

SHEET NUMBER	DESCRIPTION	DRAWING NUMBER
351	GENERAL PLAN & ELEVATION	ST1-01
352	TYPICAL SECTIONS	ST1-02
353	PROFILES	ST1-03
354	ESTIMATE OF QUANTITIES & INDEX	ST1-04
355	GENERAL NOTES	ST1-05
356	BORING LOCATION PLAN	ST1-06
357	GENERAL SUBSURFACE PROFILE	ST1-07
358	EXCAVATION AND EMBANKMENT	ST1-08
359	ABUTMENT PLAN & ELEVATION	ST1-09
360	MICROPILE DETAILS	ST1-10
361	APPROACH DETAILS & JOINT SYSTEM	ST1-11
362	MISCELLANEOUS DETAILS	ST1-12
363	BAR LIST AND BAR BENDING DIAGRAMS	ST1-13

AFFIX SEAL:
ON:

STATE OF NEW YORK
GEOFFREY ROBERT GROSS
D264571
No. 079932
LICENSED PROFESSIONAL ENGINEER
June 23 2021

ALTERED BY:
ON:

AS-BUILT REVISIONS
DESCRIPTION OF ALTERATIONS:

TRANSIT ROAD, PART 4, SH1334-A-1
NY ROUTE 78, TRANSIT ROAD
BIN 1030250 & 1080550 OVER ELLICOTT CREEK
TOWNS OF CHEEKTOWAGA AND LANCASTER
COUNTY: ERIE REGION: 05

PIN 5813.61
NY RTE 78

BRIDGES
1080550

CULVERTS

ALL DIMENSIONS IN ft UNLESS OTHERWISE NOTED

ESTIMATE OF QUANTITIES & INDEX

PEDESTRIAN BRIDGE
OVER
ELLICOTT CREEK

CONTRACT NUMBER
D264571

DRAWING NO. ST1-04
SHEET NO. 354

IT IS A VIOLATION OF LAW FOR ANY PERSON, UNLESS THEY ARE ACTING UNDER THE DIRECTION OF A LICENSED PROFESSIONAL ENGINEER, ARCHITECT, LANDSCAPE ARCHITECT, OR LAND SURVEYOR, TO ALTER AN ITEM IN ANY WAY. IF AN ITEM BEARING THE STAMP OF A LICENSED PROFESSIONAL IS ALTERED, THE ALTERING ENGINEER, ARCHITECT, LANDSCAPE ARCHITECT, OR LAND SURVEYOR SHALL STAMP THE DOCUMENT AND INCLUDE THE NOTATION "ALTERED BY" FOLLOWED BY THEIR SIGNATURE, THE DATE OF SUCH ALTERATION, AND A SPECIFIC DESCRIPTION OF THE ALTERATION.

NEW YORK STATE OF OPPORTUNITY. Department of Transportation

PROJECT MANAGER R. SCHALLER
CHECK G. GROSS
DRAFTING B. SOKOL
CHECK G. GROSS
DESIGN G. FAIZI
JOB MANAGER G. GROSS
DESIGN SUPERVISOR N. DUENNEBACKE
FILE NAME = 581361_cpb_1080550_est_index.dgn
DATE/TIME = 22-JUN-2021 11:31
USER = ggross

GENERAL NOTES:

1. CONSTRUCTION AND MATERIALS SPECIFICATIONS: STANDARD SPECIFICATIONS, CONSTRUCTION AND MATERIALS, NEW YORK STATE DEPARTMENT OF TRANSPORTATION, OFFICE OF ENGINEERING WITH ALL PROVISIONS IN EFFECT AS OF JUNE 2021 (FOR CONSTRUCTION PURPOSES, MINIMUM COMPRESSIVE STRENGTH OF STRUCTURAL CONCRETE REQUIRED AT 28 DAYS: f'c = 3,000 psi UNLESS OTHERWISE NOTED).

2. DETAILS ON THE DRAWINGS LABELED AS "NOT TO SCALE" ARE INTENTIONALLY DRAWN NOT TO SCALE FOR VISUAL CLARITY. ALL OTHER DETAILS FOR WHICH NO SCALE IS SHOWN ARE DRAWN PROPORTIONAL AND ARE FULLY DIMENSIONED.

3. ALL SHOP DRAWINGS SUBMITTED FOR THIS PROJECT SHALL BE IN US CUSTOMARY UNITS.

GENERAL NOTES (CONT'D):

4. BRIDGE SHALL BE MAINTAINED IN ACCORDANCE WITH THE GUIDELINES CONTAINED IN THE CURRENT EDITION OF THE AASHTO MAINTENANCE MANUAL FOR ROADWAYS AND BRIDGES.

5. HIGH VOLTAGE ELECTRICAL LINES ARE IN PROXIMITY TO THIS BRIDGE.

6. THE LOAD RATINGS ARE IN ACCORDANCE WITH THE AASHTO MANUAL FOR BRIDGE EVALUATION.

7. EXPOSED CORNERS OF CONCRETE SHALL HAVE A 1" CHAMFER UNLESS OTHERWISE NOTED.

BIN 1080550 - PEDESTRIAN BRIDGE OVER ELLICOTT CREEK

GENERAL NOTES:

1. DESIGN SPECIFICATIONS: NYSDOT LRFD BRIDGE DESIGN SPECIFICATIONS (INCLUDING LRFD GUIDE SPECIFICATIONS FOR THE DESIGN OF PEDESTRIAN BRIDGES (G.S.D.P.B.)) WITH ALL PROVISIONS IN EFFECT AS OF JUNE 2021 (FOR DESIGN PURPOSES, MINIMUM COMPRESSIVE STRENGTH OF STRUCTURAL CONCRETE AT 28 DAYS: f'c = 3,000 psi UNLESS OTHERWISE NOTED).

2. LIVE LOAD: NO VEHICULAR LIVE LOAD, ENTRANCE TO PREFABRICATED BRIDGE SHALL BE CONFIGURED TO PREVENT DESIGN VEHICLE ACCESS ON THE SUPERSTRUCTURE BY PROVIDING AN ACCESS WIDTH OF 5 FEET (CLEAR WIDTH ON BRIDGE SHALL BE 8 FEET BETWEEN POINTS WHERE VEHICULAR ACCESS IS RESTRICTED).

3. CONCRETE COVER TO REINFORCEMENT SHALL BE 2" UNLESS OTHERWISE NOTED.

SUBSTRUCTURE NOTES:

1. THE SUBSTRUCTURE IS POSITIONED ABOVE OHW ELEVATION THEREFOR COFFERDAMS ARE NOT SPECIFIED. INSTALLATION OF HEAVY STONE FILL ABOVE EXISTING RIP-RAP ELEVATION SHALL BE ACCOMPLISHED USING WATER DIVERSION OR AS APPROVED BY THE ENGINEER IN ORDER TO COMPLY WITH PERMIT REQUIREMENTS.

2. THE COST OF ALL MATERIAL AT EACH CONSTRUCTION JOINT, CONTRACTION JOINT AND CONCRETE EXPANSION JOINT SHALL BE INCLUDED IN THE PRICES BID FOR THE VARIOUS ITEMS OF THE CONTRACT.

3. ORDINARY HIGH WATER (OHW) ELEVATION IS ESTIMATED TO BE 689 FEET. THIS IS DEFINED AS THE WATER SURFACE ELEVATION FOR THE MEAN ANNUAL FLOOD, WHICH IS THE FLOOD THAT HAS A RECURRENCE INTERVAL OF 2.33 YEARS.

4. ORDINARY WATER (OW) ELEVATION IS ESTIMATED TO BE 688 FEET. THIS IS DEFINED AS THE HIGHEST SURFACE WATER ELEVATION LIKELY TO BE ENCOUNTERED DURING ONE CONSTRUCTION SEASON (OTHER THAN MAJOR FLOODS). IT IS ALWAYS LESS THAN THE ORDINARY HIGH WATER ELEVATION AND IT IS USUALLY AN OBSERVED ELEVATION RATHER THAN A COMPUTED ONE.

5. LOW WATER (LW) ELEVATION IS ESTIMATED TO BE 687.0 FEET. THIS WATER ELEVATION IS THE NORMAL LOW WATER ELEVATION PREVALENT DURING ONE CONSTRUCTION SEASON FOR MORE THAN 25% OF THE TIME. IT IS AN OBSERVED ELEVATION RATHER THAN A COMPUTED ONE.

SUPERSTRUCTURE NOTES:

1. THE NEW PEDESTRIAN BRIDGE SHALL BE DESIGN AND BUILT IN ACCORDANCE WITH THE SPECIFICATIONS FOR ITEM 564.80010016 AND THE FOLLOWING REQUIREMENTS:

A. DECK TYPE SHALL BE REINFORCED CONCRETE AND FINISHED PER THE REQUIREMENTS OF SPEC.§ 557-3.10.

B. IF AN OVERHEAD HORIZONTAL BRACING SYSTEM IS REQUIRED THEN THE INTERIOR VERTICAL CLEARANCE SHALL BE 8 FEET MIN. AS MEASURED FROM TOP SURFACE OF THE DECK TO THE BOTTOM OF THE OVERHEAD BRACING SYSTEM.

C. CENTERLINE AZIMUTH FOR PEDESTRIAN STRUCTURE (BIN 1080550) SHALL MATCH CENTERLINE AZIMUTH FOR BIN 1030250, THEY SHALL BE PARALLEL.

D. THE STRUCTURAL STEEL FOR THIS BRIDGE SHALL BE COMPLETELY PAINTED, COST TO BE INCLUDED IN BRIDGE ITEM. FINISH COAT COLOR SHALL BE BLACK. THE COLOR SHALL CONFORM TO FS37038 (FEDERAL STANDARD 595C). VIEWING SHALL BE DONE UNDER NORTH STANDARD DAYLIGHT. BRIDGE & APPROACH RAIL, FENCE FABRIC (VINYL COVERED), PLASTIC COATED FENCE APPURTENANCES AND ALL OTHER BRIDGE APPURTENANCES ABOVE DECK LEVEL SHALL CLOSELY MATCH THE COLOR SPECIFIED. PREPARE AND PAINT APPLICABLE ELEMENTS OF THE STRUCTURE AND APPROACH RAIL IN ACCORDANCE WITH SPEC §572 (SHOP PAINTING) EXCEPT REMOVAL OF GALVANIZING IS NOT REQUIRED (UTILIZE APPROPRIATE PRIMER/PAINT SYSTEM FOR GALVANIZED ELEMENTS). COST OF PAINT SYSTEM TO BE INCLUDED IN THE PRICE BID FOR THE APPLICABLE PEDESTRIAN BRIDGE OR APPROACH RAIL ITEM.

SUPERSTRUCTURE NOTES (CONT'D):

2. THE HYDRAULIC LOW CHORD TGL ELEVATION OF THE PEDESTRIAN STRUCTURE SHALL BE 6 INCHES (MIN.) HIGHER THAN THE CORRESPONDING HYDRAULIC LOW CHORD ELEVATION OF THE EXISTING HIGHWAY STRUCTURE AT ANY POINT ALONG THE PROFILE.

3. PEDESTRIAN RAIL SYSTEM:

A. FIVE-RAIL PEDESTRIAN BRIDGE RAIL SYSTEM SHALL CONFORM TO REQUIREMENTS OF SPEC §568 WITH THE COST OF THE PEDESTRIAN RAIL SYSTEM ON BRIDGE TO BE INCLUDED IN PRICE BID FOR THE PEDESTRIAN BRIDGE ITEM.

B. APPROACH PEDESTRIAN RAIL SHALL BE PAID FOR UNDER ITEM 568.84. APPROACH RAIL SHALL BE CONFIGURED TO RESTRICT LARGE VEHICLE ACCESS FROM ENTERING ONTO THE STRUCTURE BY PROVIDING NARROW CLEARANCE OF 5 FEET AS SHOWN ON SIDEWALK APPROACH DETAILS (WIDENS TO 8 FEET CLEARANCE AT THE ENTRANCE AREA OF BRIDGE). DETAILS SHOWN FOR APPROACH RAIL ARE FOR REFERENCE AND ESTIMATING PURPOSES AND SHALL BE ADJUSTED BASED ON CONFIGURATION OF THE PEDESTRIAN BRIDGE SYSTEM SELECTED BY THE CONTRACTOR (EXACT ALIGNMENT OF SIDEWALK IS AFFECTED BY WIDTH OF BRIDGE SYSTEM THAT AFFECTS P.I. LOCATION/ANGLE OF APPROACH SIDEWALK ALIGNMENT WHICH AFFECTS APPROACH RAIL CONFIGURATION).

4. PEDESTRIAN FENCING ATTACHED TO THE STRUCTURE SHALL CONFORM TO APPLICABLE REQUIREMENTS OF SPEC.§670 AND STANDARD SHEET 607-04 WITH THE FOLLOWING EXCEPTIONS/CLARIFICATIONS:

A. FENCE DESIGNATION: VINYL COATED CHAIN LINK FENCE ON PLASTIC COATED FRAME.

B. STEEL FENCE FABRIC SHALL CONSIST OF 11 GAUGE Ø WIRE WITH 1" OPENING SIZE.

C. STEEL TOP AND BOTTOM RAIL IS REQUIRED AS SHOWN IN THE TYPICAL SECTION (TENSION WIRE NOT USED ON BOTTOM), BRACE RAIL/TRUSS ROD SYSTEM (PER STD. SHEET) IS NOT REQUIRED).

D. FENCE POSTS ARE NOT NECESSARY IN LOCATIONS WHERE STRUCTURAL MEMBERS CAN SUPPORT IT PROPERLY USING APPROPRIATE CONNECTING HARDWARE (HARDWARE PER SPEC y607 AND STD. SHEET GUIDANCE (U-BOLTS, ANCHORS ETC.)). TOP AND/OR BOTTOM FENCE RAIL TUBE IS NOT NECESSARY IF A STRUCTURAL MEMBER IS INSTALLED ON THE BRIDGE IN THE CORRESPONDING LOCATION (ORIENTED ACCORDINGLY WITH FENCE ATTACHED USING APPROPRIATE CONNECTING HARDWARE).

E. SEE SUPERSTRUCTURE NOTE NO. 1 FOR COLOR REQUIREMENT OF FENCE SYSTEM.

5. STEEL ERECTION:

A. THE CONTRACTOR SHALL PROVIDE FOR THE STABILITY OF STRUCTURAL STEEL DURING ALL PHASES OF ERECTION AND CONSTRUCTION, AS PROVIDED IN SUBSECTION 204 OF THE NEW YORK STATE STEEL CONSTRUCTION MANUAL (SCM). THE METHODS USED BY THE CONTRACTOR SHALL BE DOCUMENTED ON THE ERECTION DRAWINGS WITH ALL SUPPORTING STABILITY CALCULATIONS SUBMITTED AND STAMPED BY A LICENSED AND REGISTERED NEW YORK STATE PROFESSIONAL ENGINEER AND SUBMITTED TO THE DCES IN ACCORDANCE WITH THE SCM.

B. THE CONTRACTOR SHALL BE RESPONSIBLE FOR TAKING ALL NECESSARY COMPENSATORY ACTION TO ENSURE THAT THE FINAL ALIGNMENT AND PROFILE OF THE ERECTED STEEL CONFORMS TO SUBSECTION 1213, 1214, AND 1215 OF THE NEW YORK STATE STEEL CONSTRUCTION MANUAL (SCM). ANY CORRECTIVE WORK NECESSARY TO RE-POSITION PREVIOUSLY ERECTED STEEL TO ACHIEVE ACCEPTABLE ALIGNMENT AND PROFILE MUST BE APPROVED BY THE DCES, AND SHALL BE PERFORMED AT NO ADDITIONAL COST TO THE STATE.

6. IF THERE ARE FRACTURE-CRITICAL MEMBERS IN THE PROPOSED SYSTEM SELECTED BY THE CONTRACTOR UNDER ITEM 564.80010016, THEN THE CONTRACTOR SHALL COMPLY WITH THE APPLICABLE PROVISIONS OF SECTION 9 OF THE NEW YORK STATE STEEL CONSTRUCTION MANUAL (SCM).

7. IF REFERENCED ON SHOP DRAWINGS RELATED TO ITEM 564.80010016, DIMENSIONS FOR THICKNESSES OF STEEL ROLLED ANGLE SHAPES AND STRUCTURAL TUBING SHALL CONFORM TO DATA SHOWN IN THE LATEST VERSION OF THE AISC MANUAL.

8. ELEVATIONS SHOWN ON PROPOSED PROFILE ARE RELATED TO EXISTING RECORD PLAN ELEVATIONS OF ADJACENT STRUCTURE (BIN 1030250, NY 78 OVER ELLICOTT CREEK). SURVEYED ELEVATIONS OBTAINED DURING CONSTRUCTION OF THE HYDRAULIC LOW CHORD OF BIN 1030250 WILL GOVERN LAYOUT OF THE PEDESTRIAN BRIDGE TO ENSURE THAT THE LOW CHORD OF THE NEW PEDESTRIAN BRIDGE IS A MINIMUM OF 6 INCHES HIGHER THAN THE ADJACENT BRIDGE (BIN 1030250). MINOR ADJUSTMENTS TO FOOTING ELEMENT ELEVATIONS MAY BE MADE TO ACCOMODATE DISCREPANCIES BETWEEN RECORD PLAN ELEVATIONS AND SURVEYED ELEVATIONS AS APPROVED BY THE ENGINEER WITH SIGNIFICANT ADJUSTMENTS TO ELEVATIONS (MORE THAN 0.2 FT) TO BE REVIEWED BY REGIONAL STRUCTURES ENGINEER (5 BUSINESS DAY NOTICE).

WORK ZONE TRAFFIC CONTROL (WZTC):

1. SHOULDER AND LANE CLOSURES NECESSARY FOR ALL PHASES OF PEDESTRIAN BRIDGE INSTALLATION SHALL BE ACCOMPLISHED USING DETAILS FOUND FOR PHASE 2 CONSTRUCTION (DWG. NO. WZ2-1 TO WZ2-3), STANDARD SHEET DETAILS AND/OR IN COORDINATION WITH LANE CLOSURES UTILIZED FOR HIGHWAY OPERATIONS. SEE GENERAL NOTES SHEET(S) IN HIGHWAY PLANS FOR SUGGESTED CONSTRUCTION SEQUENCING AND WZTC TIME, HOLIDAY AND EVENT RESTRICTIONS.

FOUNDATION NOTES:

1. THE MICROPILES AT THE ABUTMENTS WILL SUPPORT A MAXIMUM STRENGTH LIMIT STATE AXIAL LOAD OF 56 KIPS PER PILE. INSTALL THESE PILES TO ACHIEVE A NOMINAL RESISTANCE OF 102 KIPS PER PILE.

2. THE MAXIMUM SERVICE LIMIT STATE AXIAL LOAD FOR THE PILES AT THE ABUTMENTS IS 38 KIPS PER PILE.

3. AN ENGINEERING GEOLOGIST FROM THE GEOTECHNICAL ENGINEERING BUREAU WILL BE REQUIRED TO INSPECT THE ROCK ENCOUNTERED WHEN DRILLING THE MICROPILE ROCK SOCKETS TO DETERMINE IF IT IS COMPETENT.

4. AFTER COMPLETION OF THE PILE INSTALLATION, THE ENGINEER WILL COMPLETE THE "ACTUAL PILE LENGTH" TABLE FOR INCLUSION IN THE AS-BUILT PLANS.

5. CUT OFF THE INTERIM STEEL SHEETING, ITEM 552.15, 1 FOOT BELOW FINISHED GRADE.

6. THE FOLLOWING INFORMATION WAS USED IN THE DESIGN OF THE STEEL SHEETING:

LOCATION	ELEVATION (FT.)	UNIT WEIGHT (LB/CU. FT.)	FRICTION ANGLE (DEGREES)	COHESION (LB/SQ. FT.)	WALL FRICTION (DEGREES)
BEGIN (NORTH) ABUTMENT	O.G.S. TO 665.6 (ROCK)	120	30	0	0
END (SOUTH) ABUTMENT	O.G.S. TO 687.2 (ROCK)	120	30	0	0

A. DIVIDE THE PASSIVE EARTH PRESSURE COEFFICIENT (KP) BY 1.25.

B. GROUNDWATER IS ASSUMED AT ELEVATION 689 FEET (OHW).

C. A SURCHARGE LOAD OF 250 POUNDS PER SQUARE FOOT IS ASSUMED AT THE TOP OF THE WALL.

D. SHEETING CANNOT BE DRIVEN BELOW ELEVATION 665.6 FEET AT THE BEGIN ABUTMENT AND ELEVATION 687.2 FEET AT THE END ABUTMENT, DUE TO ROCK.

7. SEE DWG. NO ST1-10 FOR MICROPILE DETAILS. INSTALL MICROPILES UNDER ITEM 551.40200017, ITEM 551.99301217 AND ITEM 551.99450017.

AFFIX SEAL:
ON:

ALTERED BY:
ON:

STATE OF NEW YORK
GEOFFREY ROBERT GROSS
D264571
No. 079932
LICENSED PROFESSIONAL ENGINEER
June 23, 2021

AS-BUILT REVISIONS
DESCRIPTION OF ALTERATIONS:

TRANSIT ROAD, PART 4, SH1334-A-1
NY ROUTE 78, TRANSIT ROAD
BIN 1030250 & 1080550 OVER ELLICOTT CREEK
TOWNS OF CHEEKTOWAGA AND LANCASTER
COUNTY: ERIE REGION: 05

PIN 5813.61
NY RTE 78

BRIDGES
1080550

CULVERTS

ALL DIMENSIONS IN ft UNLESS OTHERWISE NOTED

GENERAL NOTES

PEDESTRIAN BRIDGE
OVER
ELLICOTT CREEK

CONTRACT NUMBER
D264571

DRAWING NO. ST1-05
SHEET NO. 355

IT IS A VIOLATION OF LAW FOR ANY PERSON, UNLESS THEY ARE ACTING UNDER THE DIRECTION OF A LICENSED PROFESSIONAL ENGINEER, ARCHITECT, LANDSCAPE ARCHITECT, OR LAND SURVEYOR, TO ALTER AN ITEM IN ANY WAY. IF AN ITEM BEARING THE STAMP OF A LICENSED PROFESSIONAL IS ALTERED, THE ALTERING ENGINEER, ARCHITECT, LANDSCAPE ARCHITECT, OR LAND SURVEYOR SHALL STAMP THE DOCUMENT AND INCLUDE THE NOTATION "ALTERED BY" FOLLOWED BY THEIR SIGNATURE, THE DATE OF SUCH ALTERATION, AND A SPECIFIC DESCRIPTION OF THE ALTERATION.

NEW YORK STATE OF OPPORTUNITY. Department of Transportation

PROJECT MANAGER R. SCHALLER
CHECK G. GROSS
DRAFTING B. SOKOL
CHECK G. GROSS
DESIGN A. FAIZI
JOB MANAGER G. GROSS
DESIGN SUPERVISOR N. DUENNEBACKE
FILE NAME = 581361_cpb_1080550_gen_note.dgn
DATE/TIME = 23-JUN-2021 10:27
USER = ggross

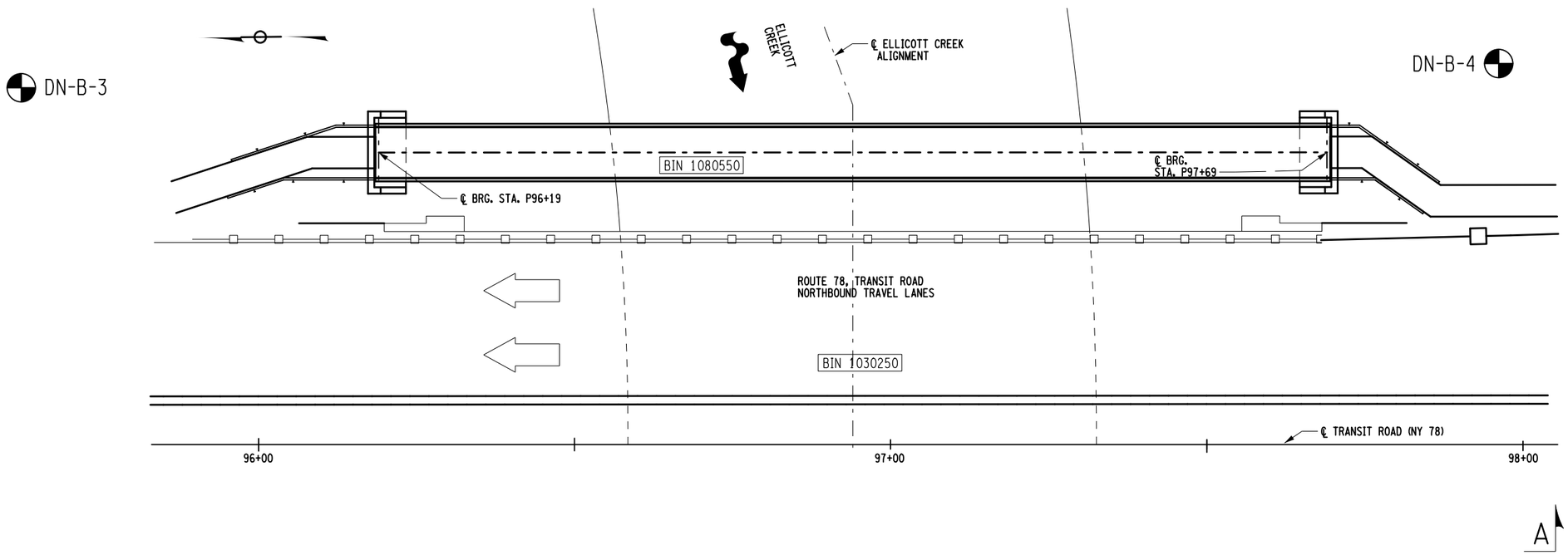

BORING LOCATION PLAN

10 0 10 20 30 40′

1" = 20′

GENERAL NOTES

1.) SOUND ENGINEERING JUDGMENT WAS EXERCISED IN PREPARING THE SUBSURFACE INFORMATION PRESENTED HERE ON. THIS INFORMATION WAS PREPARED AND IS INTENDED FOR STATE DESIGN AND ESTIMATE PURPOSES ONLY. ITS PRESENTATION ON THE PLANS OR ELSEWHERE IS FOR THE PURPOSE OF PROVIDING INTENDED USERS WITH ACCESS TO THE SAME INFORMATION AVAILABLE TO THE STATE. THIS IS NOT INTENDED AS A SUBSTITUTE FOR PERSONAL INVESTIGATION, INDEPENDENT INTERPRETATIONS OR JUDGEMENT OF THE CONTRACTOR.

2.) GENERAL SOIL AND ROCK (WHERE ENCOUNTERED) STRATUM DESCRIPTIONS AND INDICATED BOUNDARIES ARE BASED ON AN ENGINEERING INTERPRETATION OF ALL AVAILABLE SUBSURFACE INFORMATION BY THE GEOTECHNICAL ENGINEERING BUREAU AND MAY NOT NECESSARILY REFLECT THE ACTUAL VARIATION IN SUBSURFACE CONDITIONS BETWEEN BORINGS AND SAMPLES. DETAILED DATA AND FIELD INTERPRETATIONS OF CONDITIONS ENCOUNTERED IN INDIVIDUAL BORINGS ARE SHOWN ON THE SUBSURFACE EXPLORATION LOGS.

3.) THE OBSERVED WATER LEVELS AND/OR CONDITIONS INDICATED ON THE SUBSURFACE PROFILES ARE AS RECORDED AT THE TIME OF EXPLORATION. ACTUAL WATER LEVELS MAY DIFFER FROM THE OBSERVED WATER LEVEL BECAUSE OF LIMITATIONS IN THE NUMBER AND DURATION OF OBSERVATIONS AND WILL VARY WITH CHANGES IN CLIMATE AND RAINFALL.

4.) ALL STRUCTURE DETAILS AND FOOTING ELEVATIONS SHOWN HEREON ARE FOR ILLUSTRATIVE PURPOSES ONLY AND MAY NOT BE INDICATIVE OF THE FINAL DESIGN CONDITIONS SHOWN ON THE CONTRACT PLANS.

LEGEND

THE FOLLOWING TABLES SUMMARIZE THE DESCRIPTIVE INFORMATION USED ON THIS PROFILE.

DENSITY (NON-PLASTIC SOILS)	NO. OF BLOWS PER FOOT OF PENETRATION OF A 2 INCH O.D. (1-3/8 INCH I.D.) SAMPLER USING A 140 LB. HAMMER, 30 INCH FALL.
Very Loose	0-4
Loose	5-10
Medium Compact	11-24
Compact	25-50
Very Compact	over 50

CONSISTENCY (PLASTIC SOILS)	
Very Soft	0-1
Soft	2-4
Medium Stiff	5-8
Stiff	9-15
Very Stiff	16-30
Hard	over 30

SYMBOLS

DRILL HOLE — DN-B

OBSERVED WATER LEVEL

Loose to Compact Brown Gravelly TOPSOIL, Sandy with Root Fibers

Very Loose Brown Clayey SILT, Gravelly to Sandy SILT, Clayey

Loose to Compact Brown/Grey Silty Fine SAND, Clayey with Root Fibers to Gravelly SAND, Silty to Sandy GRAVEL, Silty

Very Soft to Medium Stiff Grey Silty CLAY with Pieces of Gravel to Gravelly CLAY,Silty

Stiff to Hard Grey Silty CLAY with Pieces of Gravel to Gravelly CLAY, Silty

Loose to Compact Red/Brown Fine Sandy SILT to Gravelly SILT, Fine Sandy

ROCK

F.S. HEISER
DIRECTOR
GEOTECHNICAL ENGINEERING BUREAU

AFFIX SEAL: ON: Hala Bashir 06/23/2021

ALTERED BY: ON:

STATE OF NEW YORK · HALA M BASHIR · 083830 · LICENSED PROFESSIONAL ENGINEER

AS-BUILT REVISIONS
DESCRIPTION OF ALTERATIONS:

TRANSIT ROAD, PART 4, SH1334-A-1
NY ROUTE 78, TRANSIT ROAD
BIN 1030250 & 1080550 OVER ELLICOTT CREEK
TOWNS OF CHEEKTOWAGA AND LANCASTER
COUNTY: ERIE REGION: 05

PIN 5813.61
NY RTE 78

BRIDGES 1080550

CULVERTS

ALL DIMENSIONS IN ft UNLESS OTHERWISE NOTED

BORING LOCATION PLAN

PEDESTRIAN BRIDGE OVER ELLICOTT CREEK

CONTRACT NUMBER D264571

DRAWING NO. ST1-06

SHEET NO. 356

IT IS A VIOLATION OF LAW FOR ANY PERSON, UNLESS THEY ARE ACTING UNDER THE DIRECTION OF A LICENSED PROFESSIONAL ENGINEER, ARCHITECT, LANDSCAPE ARCHITECT, OR LAND SURVEYOR, TO ALTER AN ITEM IN ANY WAY. IF AN ITEM BEARING THE STAMP OF A LICENSED PROFESSIONAL IS ALTERED, THE ALTERING ENGINEER, ARCHITECT, LANDSCAPE ARCHITECT, OR LAND SURVEYOR SHALL STAMP THE DOCUMENT AND INCLUDE THE NOTATION "ALTERED BY" FOLLOWED BY THEIR SIGNATURE, THE DATE OF SUCH ALTERATION, AND A SPECIFIC DESCRIPTION OF THE ALTERATION.

NEW YORK STATE OF OPPORTUNITY. Department of Transportation

PROJECT MANAGER
CHECK
DRAFTING N.E.G.
CHECK H.M.B.
DESIGN N.E.G.
JOB MANAGER H.M.B.
DESIGN SUPERVISOR J.J.D. 6/23/2021

FILE NAME = 581361_cpb_T1_geo_blp.dgn
DATE/TIME = 23-JUN-2021 15:12
USER = ngross

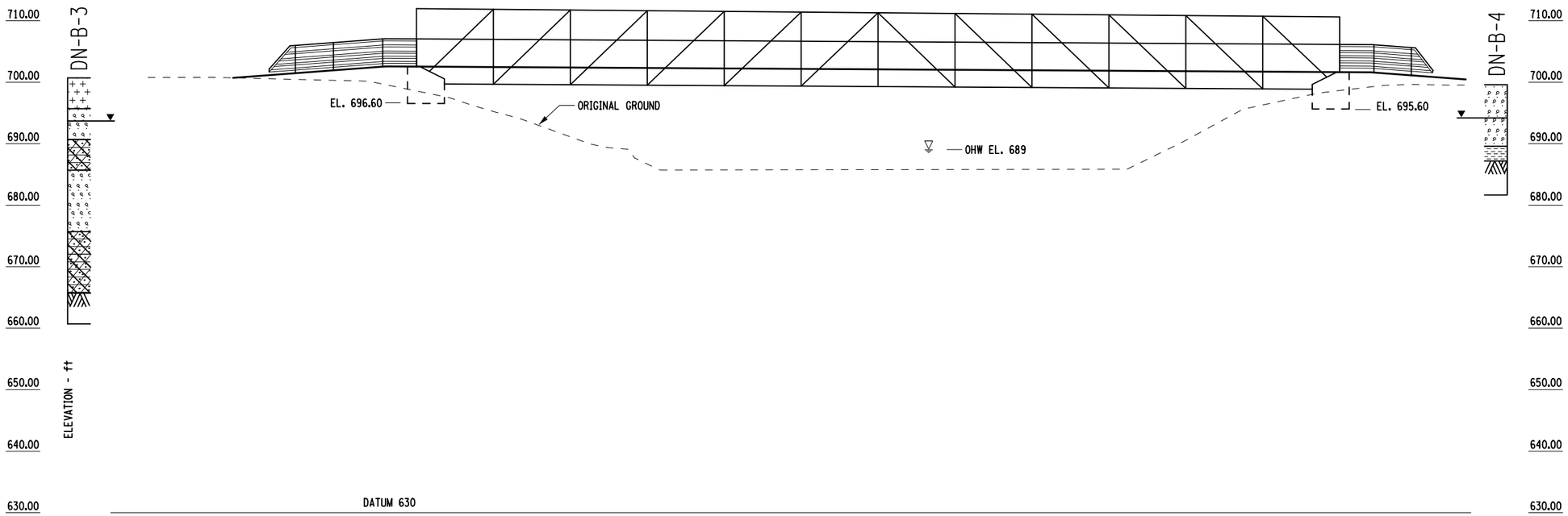

GENERAL SUBSURFACE PROFILE
ELEVATION A-A

10 0 10 20 30 40'
1" = 20'

GENERAL NOTES

1.) SOUND ENGINEERING JUDGMENT WAS EXERCISED IN PREPARING THE SUBSURFACE INFORMATION PRESENTED HERE ON. THIS INFORMATION WAS PREPARED AND IS INTENDED FOR STATE DESIGN AND ESTIMATE PURPOSES ONLY. ITS PRESENTATION ON THE PLANS OR ELSEWHERE IS FOR THE PURPOSE OF PROVIDING INTENDED USERS WITH ACCESS TO THE SAME INFORMATION AVAILABLE TO THE STATE. THIS IS NOT INTENDED AS A SUBSTITUTE FOR PERSONAL INVESTIGATION, INDEPENDENT INTERPRETATIONS OR JUDGEMENT OF THE CONTRACTOR.

2.) GENERAL SOIL AND ROCK (WHERE ENCOUNTERED) STRATUM DESCRIPTIONS AND INDICATED BOUNDARIES ARE BASED ON AN ENGINEERING INTERPRETATION OF ALL AVAILABLE SUBSURFACE INFORMATION BY THE GEOTECHNICAL ENGINEERING BUREAU AND MAY NOT NECESSARILY REFLECT THE ACTUAL VARIATION IN SUBSURFACE CONDITIONS BETWEEN BORINGS AND SAMPLES. DETAILED DATA AND FIELD INTERPRETATIONS OF CONDITIONS ENCOUNTERED IN INDIVIDUAL BORINGS ARE SHOWN ON THE SUBSURFACE EXPLORATION LOGS.

3.) THE OBSERVED WATER LEVELS AND/OR CONDITIONS INDICATED ON THE SUBSURFACE PROFILES ARE AS RECORDED AT THE TIME OF EXPLORATION. ACTUAL WATER LEVELS MAY DIFFER FROM THE OBSERVED WATER LEVEL BECAUSE OF LIMITATIONS IN THE NUMBER AND DURATION OF OBSERVATIONS AND WILL VARY WITH CHANGES IN CLIMATE AND RAINFALL.

4.) ALL STRUCTURE DETAILS AND FOOTING ELEVATIONS SHOWN HEREON ARE FOR ILLUSTRATIVE PURPOSES ONLY AND MAY NOT BE INDICATIVE OF THE FINAL DESIGN CONDITIONS SHOWN ON THE CONTRACT PLANS.

LEGEND

THE FOLLOWING TABLES SUMMARIZE THE DESCRIPTIVE INFORMATION USED ON THIS PROFILE.

DENSITY (NON-PLASTIC SOILS)	NO. OF BLOWS PER FOOT OF PENETRATION OF A 2 INCH O.D. (1-3/8 INCH I.D.) SAMPLER USING A 140 LB. HAMMER, 30 INCH FALL.
Very Loose	0-4
Loose	5-10
Medium Compact	11-24
Compact	25-50
Very Compact	over 50
CONSISTENCY (PLASTIC SOILS)	
Very Soft	0-1
Soft	2-4
Medium Stiff	5-8
Stiff	9-15
Very Stiff	16-30
Hard	over 30

SYMBOLS

DRILL HOLE — DN-B

OBSERVED WATER LEVEL

Loose to Compact Brown Gravelly TOPSOIL, Sandy with Root Fibers

Very Loose Brown Clayey SILT, Gravelly to Sandy SILT, Clayey

Loose to Compact Brown/Grey Silty Fine SAND, Clayey with Root Fibers to Gravelly SAND, Silty to Sandy GRAVEL, Silty

Very Soft to Medium Stiff Grey Silty CLAY with Pieces of Gravel to Gravelly CLAY,Silty

Stiff to Hard Grey Silty CLAY with Pieces of Gravel to Gravelly CLAY, Silty

Loose to Compact Red/Brown Fine Sandy SILT to Gravelly SILT, Fine Sandy

ROCK

F.S. HEISER
DIRECTOR
GEOTECHNICAL ENGINEERING BUREAU

AFFIX SEAL: ON: Hala Bashir 06/23/2021

ALTERED BY: ON:

STATE OF NEW YORK · HALA M BASHIR · 083830 · LICENSED PROFESSIONAL ENGINEER

AS-BUILT REVISIONS
DESCRIPTION OF ALTERATIONS:

TRANSIT ROAD, PART 4, SH1334-A-1	PIN 5813.61	BRIDGES	CULVERTS	ALL DIMENSIONS IN ft UNLESS OTHERWISE NOTED
NY ROUTE 78, TRANSIT ROAD	NY RTE 78	1080550		GENERAL SUBSURFACE PROFILE
BIN 1030250 & 1080550 OVER ELLICOTT CREEK				PEDESTRIAN BRIDGE OVER ELLICOTT CREEK
TOWNS OF CHEEKTOWAGA AND LANCASTER				
COUNTY: ERIE REGION: 05				

CONTRACT NUMBER D264571

DRAWING NO. ST1-07

SHEET NO. 357

IT IS A VIOLATION OF LAW FOR ANY PERSON, UNLESS THEY ARE ACTING UNDER THE DIRECTION OF A LICENSED PROFESSIONAL ENGINEER, ARCHITECT, LANDSCAPE ARCHITECT, OR LAND SURVEYOR, TO ALTER AN ITEM IN ANY WAY. IF AN ITEM BEARING THE STAMP OF A LICENSED PROFESSIONAL IS ALTERED, THE ALTERING ENGINEER, ARCHITECT, LANDSCAPE ARCHITECT, OR LAND SURVEYOR SHALL STAMP THE DOCUMENT AND INCLUDE THE NOTATION "ALTERED BY" FOLLOWED BY THEIR SIGNATURE, THE DATE OF SUCH ALTERATION, AND A SPECIFIC DESCRIPTION OF THE ALTERATION.

NEW YORK STATE OF OPPORTUNITY. Department of Transportation

PROJECT MANAGER
CHECK
DRAFTING N.E.G.
CHECK H.M.B.
DESIGN N.E.G.
JOB MANAGER H.M.B.
DESIGN SUPERVISOR J.J.D. 6/23/2021

FILE NAME = 581361_cpb_71_geo_gsp.dgn
DATE/TIME = 23-JUN-2021 15:05
USER = ngross

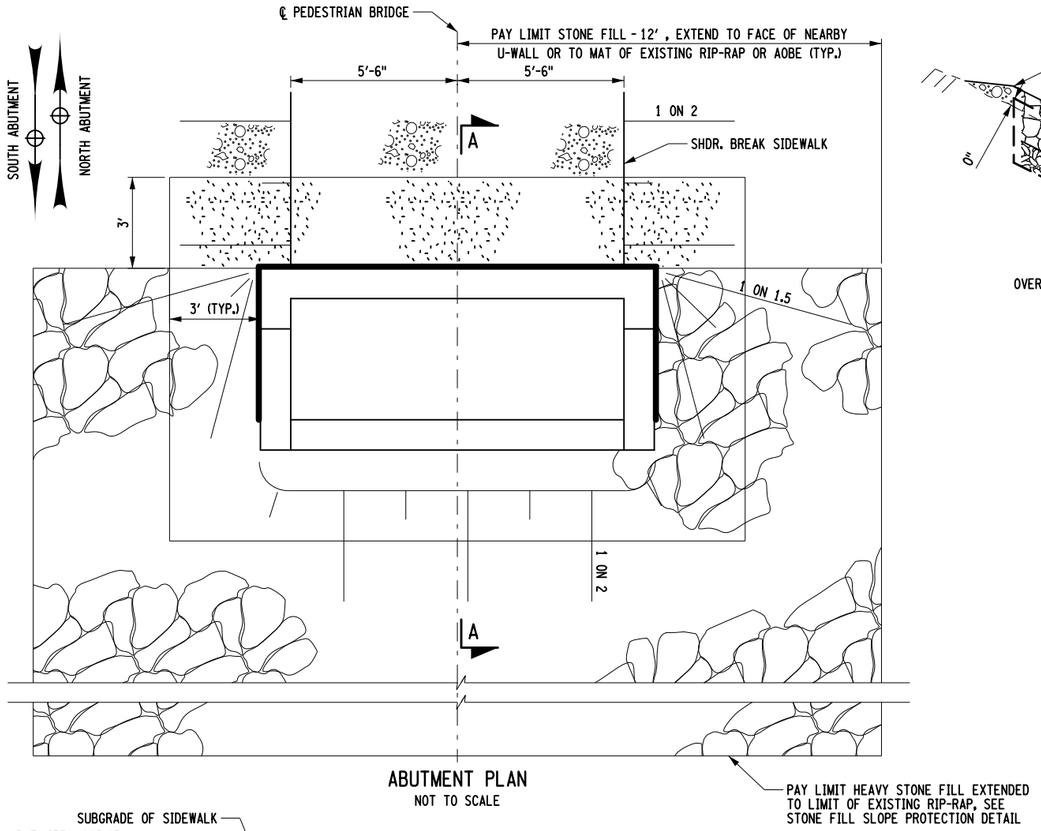

ABUTMENT PLAN
NOT TO SCALE

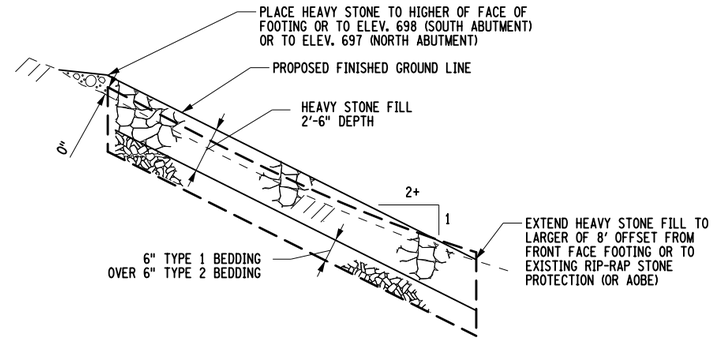

STONE FILL SLOPE PROTECTION
NOT TO SCALE

LEGEND

- EXISTING GROUND SURFACE
- BEDROCK
- SELECT STRUCTURE FILL (ITEM 203.21), COMPACTED TO 95% OF STANDARD PROCTOR MAXIMUM DENSITY
- EMBANKMENT IN PLACE, COMPACTED TO 95% OF STANDARD PROCTOR MAXIMUM DENSITY (ITEM 203.03)
- STONE FILLING (HEAVY) (ITEM 620.05)
- BEDDING MATERIAL (6" ITEM 620.0801 OVER 6" ITEM 620.0802)
- PREFABRICATED COMPOSITE STRUCTURAL/INTEGRAL ABUTMENT DRAIN (ITEM 207.26)
- AREA ENCLOSED WITHIN THESE LINES DESIGNATES PAYMENT LINES FOR STRUCTURE EXCAVATION (ITEM 206.01)
- DESIGNATES PAYMENT LINES FOR OR INTERIM STEEL SHEETING (552.15)

NOTE: ALL ITEMS IN LEGEND ARE INCLUDED IN BRIDGE ESTIMATE, EXCEPT AS NOTED.

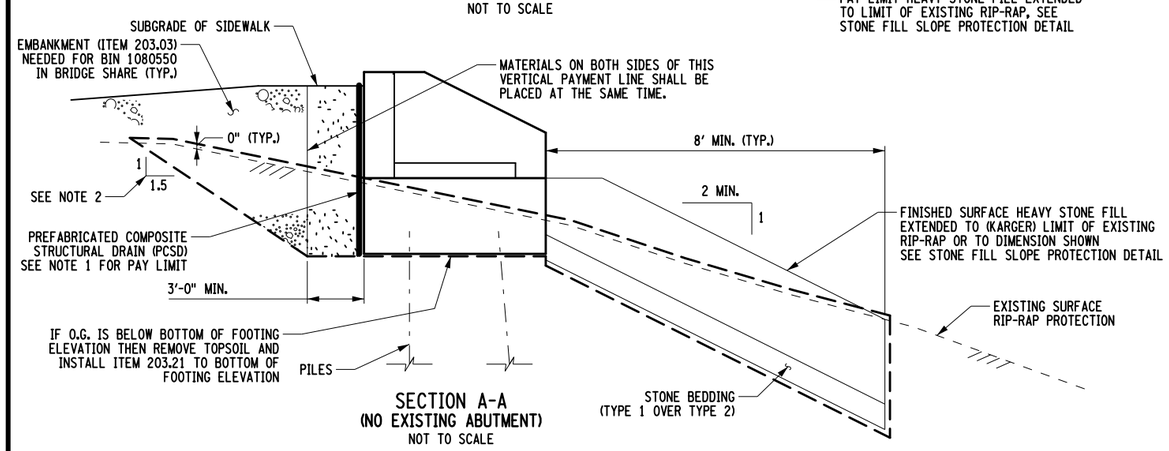

SECTION A-A
(NO EXISTING ABUTMENT)
NOT TO SCALE

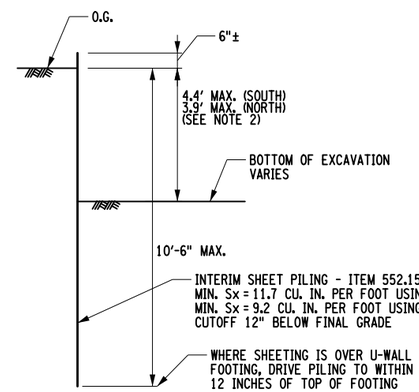

SECTION C-C - INTERIM SHEETING
NOT TO SCALE

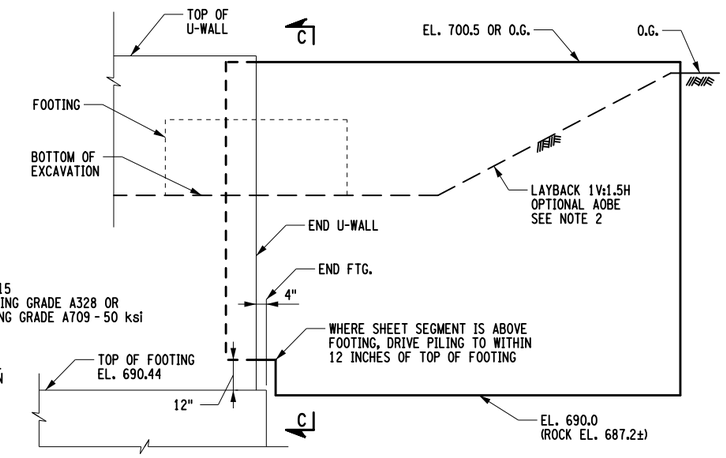

ELEVATION B-B
NOT TO SCALE

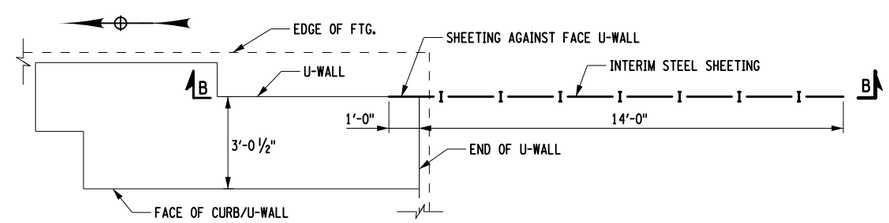

PLAN - INTERIM SHEETING
SOUTH ABUTMENT
(NORTH ABUTMENT SIMILAR)
NOT TO SCALE

NOTES:

1. PAY LIMIT ITEM 207.26: FROM BOTTOM OF FOOTING TO 9" BELOW TOP OF CHEEKWALL AND 4" BELOW TOP OF BACKWALL TO WITHIN 6" TO FRONT FACE OF FOOTING.

2. INTERIM SHEETING REQUIRED WHERE SHOWN TO RETAIN HIGHWAY EMBANKMENT/BRIDGE APPROACH IN AREA WHERE EXCAVATION PROGRESSES TO BOTTOM OF FOOTING ELEVATION BEYOND END OF U-WALL OF ADJACENT BRIDGE. WORKER PROTECTION IN OTHER AREAS WHERE EXCAVATION IS LESS THAN 5 FEET IN HEIGHT NEED NOT BE LAID BACK/BENCHED IF IN COMPLIANCE WITH NECESSARY O.S.H.A. PROVISIONS [EX. 29 CFR 1926.652(A)(1)(ii)] AND AS APPROVED BY THE ENGINEER.

AFFIX SEAL:
ON:

ALTERED BY:
ON:

STATE OF NEW YORK
GEOFFREY ROBERT GROSS
LICENSED PROFESSIONAL ENGINEER
No. 079932
D264571
June 16, 2021

AS-BUILT REVISIONS
DESCRIPTION OF ALTERATIONS:

TRANSIT ROAD, PART 4, SH1334-A-1	PIN 5813.61	BRIDGES	CULVERTS	ALL DIMENSIONS IN ft UNLESS OTHERWISE NOTED
NY ROUTE 78, TRANSIT ROAD	NY RTE 78	1080550		EXCAVATION & EMBANKMENT
BIN 1030250 & 1080550 OVER ELLICOTT CREEK				PEDESTRIAN BRIDGE OVER ELLICOTT CREEK
TOWNS OF CHEEKTOWAGA AND LANCASTER				
COUNTY: ERIE REGION: 05				

CONTRACT NUMBER
D264571

DRAWING NO. ST1-08
SHEET NO. 358

IT IS A VIOLATION OF LAW FOR ANY PERSON, UNLESS THEY ARE ACTING UNDER THE DIRECTION OF A LICENSED PROFESSIONAL ENGINEER, ARCHITECT, LANDSCAPE ARCHITECT, OR LAND SURVEYOR, TO ALTER AN ITEM IN ANY WAY. IF AN ITEM BEARING THE STAMP OF A LICENSED PROFESSIONAL IS ALTERED, THE ALTERING ENGINEER, ARCHITECT, LANDSCAPE ARCHITECT, OR LAND SURVEYOR SHALL STAMP THE DOCUMENT AND INCLUDE THE NOTATION "ALTERED BY" FOLLOWED BY THEIR SIGNATURE, THE DATE OF SUCH ALTERATION, AND A SPECIFIC DESCRIPTION OF THE ALTERATION.

NEW YORK STATE OF OPPORTUNITY. Department of Transportation

PROJECT MANAGER R. SCHALLER
CHECK G. GROSS
DRAFTING B. SOKOL
CHECK G. GROSS
DESIGN S. FAIZI
JOB MANAGER G. GROSS
DESIGN SUPERVISOR N. DUENNEBACKE
FILE NAME = 581361_cpb_1080550_Exc_Emb_1 of 2.dgn
DATE/TIME = 16-JUN-2021 15:57
USER = ggross

MICROPILE TABLE *			
NORTH ABUTMENT PILE NO.	LENGTH BELOW CUT-OFF (FT)	SOUTH ABUTMENT PILE NO.	LENGTH BELOW CUT-OFF (FT)
1		1	
2		2	
3		3	
4		4	
5		5	
6		6	

*ASSUMED UNFACTORED ABUTMENT REACTIONS (KIPS PER ABUTMENT):
DEAD LOAD: 97
LIVE LOAD (UNIFORM 90 PSF): 54
WIND (HORIZONTAL TRANSVERSE): 31.3
THERMAL (LONGITUDINAL): 18.1
NET FACTORED UPLIFT AT ONE BEARING R_u: 2.1

DESIGN LENGTH OF MICROPILE:
35.5 FT. EACH (NORTH ABUTMENT - BEGIN)
12.9 FT. EACH (SOUTH ABUTMENT - END)

CONCRETE TABLE			
PLACEMENT	LOCATION	QUANTITY	ITEM NO.
1	NORTH ABUTMENT (BEGIN)	7.2 C.Y.	555.08
2		2.7 C.Y.	555.09
3		0.8 C.Y.	555.09
1	SOUTH ABUTMENT (END)	7.2 C.Y.	555.08
2		2.7 C.Y.	555.09
3		0.8 C.Y.	555.09

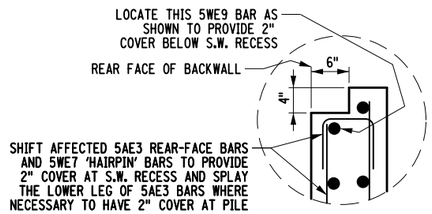

"DETAIL A" AT SIDEWALK RECESS

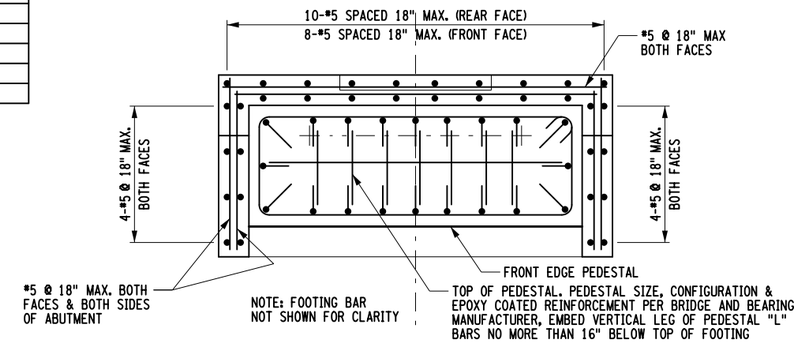

ABUTMENT UWALL REINFORCEMENT PLAN
NOT TO SCALE

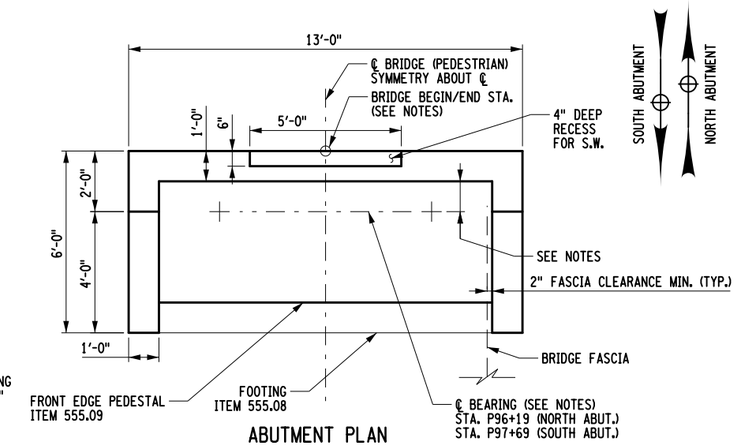

ABUTMENT PLAN
NOT TO SCALE

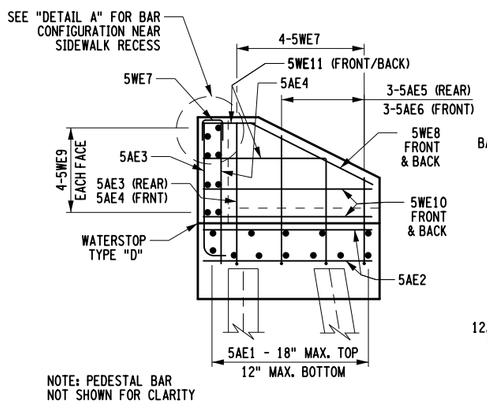

REINFORCEMENT - ELEVATION

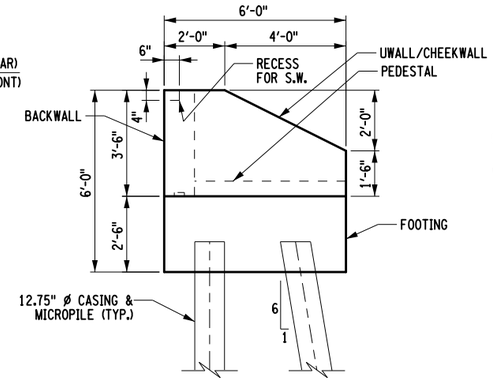

ELEVATION

ELEVATION - A-A
NOT TO SCALE

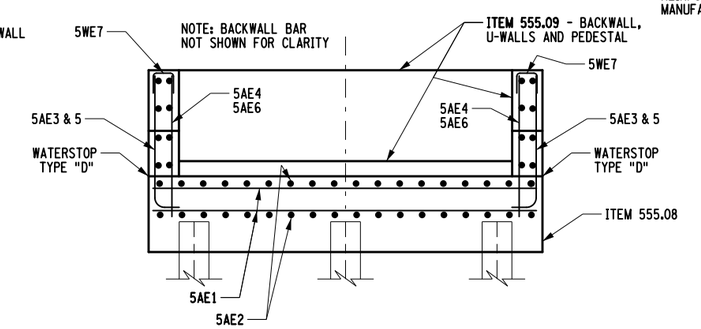

REINFORCEMENT - ELEVATION
NOT TO SCALE

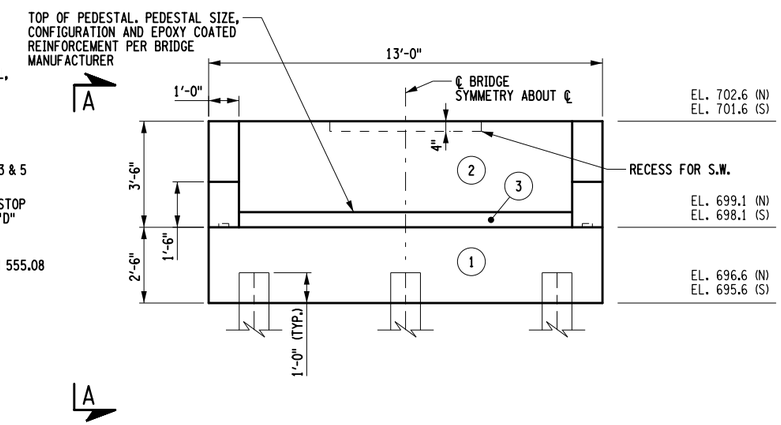

ABUTMENT ELEVATION
NOT TO SCALE

NOTES:

1. BRIDGE BEGIN/END STATION AND BEARING LOCATION RELATIVE TO THE FACE OF BACKWALL IS DEPENDENT ON THE BEARING SIZE AND CONFIGURATION PROVIDED BY THE BRIDGE MANUFACTURER (DESIGN BY OTHERS, DIMENSION FROM FACE OF BACKWALL TO ℄ BEARING SHALL BE DETERMINED BY BRIDGE AND BEARING FABRICATOR). BEARING STATIONING SHALL NOT VARY FROM WHAT IS SHOWN. ℄ BEARING SHALL BE LOCATED BETWEEN ℄ PILE ROWS.

2. CONFIGURATION AND DIMENSIONS OF FOOTING, PEDESTAL, UWALL AND BACKWALL, INCLUDING REINFORCEMENT, MAY BE MODIFIED AS NECESSARY (AOBE) BY THE MANUFACTURER TO ACCOMODATE THE CONFIGURATION OF THE PEDESTRIAN BRIDGE (DESIGNED BY MANUFACTURER). THE COST OF ENGINEERING, SHOP DRAWINGS AND APPROVALS RELATED TO ABUTMENT MODIFICATION NECESSARY TO ACCOMODATE THE PEDESTRAIN BRIDGE, INCLUDING ADDITONAL MATERIAL AND LABOR NECESSARY TO ACCOMODATE THE MODIFICATION, SHALL BE INCLUDED IN THE PRICE BID FOR THE AFFECTED ITEMS.

3. ALL BAR SHALL BE EPOXY COATED DUE TO EXPOSURE TO CHLORIDES OF PORTIONS OF FOOTING, U-WALL AND BACKWALL.

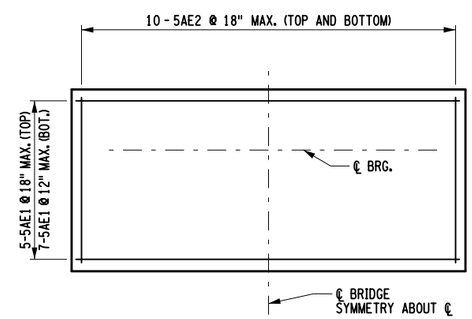

FOOTING REINFORCEMENT PLAN
NOT TO SCALE

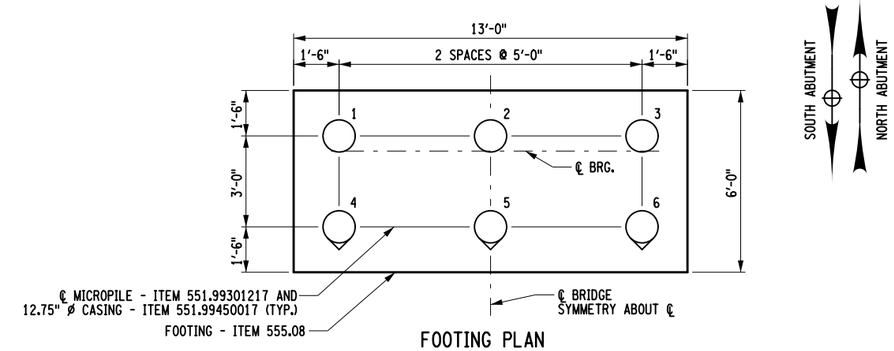

FOOTING PLAN
NOT TO SCALE

BAR COVER (UNLESS OTHERWISE NOTED):

1. 2" GENERAL & ABOVE TOP OF PILES

2. 3" FOOTING

AFFIX SEAL:
ON:

ALTERED BY:
ON:

STATE OF NEW YORK
GEOFFREY ROBERT GROSS
D264571
No. 079932
LICENSED PROFESSIONAL ENGINEER
June 22, 2021

AS-BUILT REVISIONS
DESCRIPTION OF ALTERATIONS:

TRANSIT ROAD, PART 4, SH1334-A-1	PIN 5813.61 NY RTE 78	BRIDGES 1080550	CULVERTS	ALL DIMENSIONS IN ft UNLESS OTHERWISE NOTED
NY ROUTE 78, TRANSIT ROAD				ABUTMENT PLAN AND ELEVATION
BIN 1030250 & 1080550 OVER ELLICOTT CREEK				PEDESTRIAN BRIDGE OVER ELLICOTT CREEK
TOWNS OF CHEEKTOWAGA AND LANCASTER				
COUNTY: ERIE REGION: 05				

CONTRACT NUMBER D264571

DRAWING NO. ST1-09

SHEET NO. 359

IT IS A VIOLATION OF LAW FOR ANY PERSON, UNLESS THEY ARE ACTING UNDER THE DIRECTION OF A LICENSED PROFESSIONAL ENGINEER, ARCHITECT, LANDSCAPE ARCHITECT, OR LAND SURVEYOR, TO ALTER AN ITEM IN ANY WAY. IF AN ITEM BEARING THE STAMP OF A LICENSED PROFESSIONAL IS ALTERED, THE ALTERING ENGINEER, ARCHITECT, LANDSCAPE ARCHITECT, OR LAND SURVEYOR SHALL STAMP THE DOCUMENT AND INCLUDE THE NOTATION "ALTERED BY" FOLLOWED BY THEIR SIGNATURE, THE DATE OF SUCH ALTERATION, AND A SPECIFIC DESCRIPTION OF THE ALTERATION.

NEW YORK STATE OF OPPORTUNITY. Department of Transportation

PROJECT MANAGER R. SCHALLER
CHECK G. GROSS
DRAFTING B. SOKOL
CHECK G. GROSS
DESIGN S. FAIZI
JOB MANAGER G. GROSS
DESIGN SUPERVISOR N. DUENNEBACKE
FILE NAME = 581361_cpb_1080550_abut.dgn
DATE/TIME = 22-JUN-2021 11:32
USER = ggross

NOTES:

1. FOR BEGIN ABUTMENT PLAN & ELEVATION AND REINFORCEMENT DETAILS, SEE DWG. NO. ST1-09.

2. FOR ALLOWABLE LOAD ON MICROPILES, SEE FOUNDATION NOTES DWG. NO. ST1-05.

3. AT THE BEGIN AND END ABUTMENTS, THE PERMANENT CASING SHALL EXTEND A MINIMUM EMBEDMENT OF 6 INCHES INTO COMPETENT ROCK.

4. THE MINIMUM 28 DAY COMPRESSIVE STRENGTH OF MICROPILE GROUT SHALL BE 4000 PSI.

5. COST OF MICROPILE TOP PLATE AND ROCK SOCKET EXCAVATION & ROCK SOCKET GROUT BACKFILL SHALL BE INCLUDED IN PRICE BID FOR THE MICROPILE ITEM.

6. IF CONTINUOUSLY THREADED BAR REINFORCEMENT IS NOT USED IN THE MICROPILE, THREAD THE END OF THE BAR REINFORCEMENT TO ACCEPT A STANDARD SIZE HEAVY HEX NUT/WASHER (NUT/WASHER PER SPEC.§ 715-14). COST OF THREADING, NUT AND WASHER TO BE INCLUDED IN PRICE BID FOR MICROPILE ITEM.

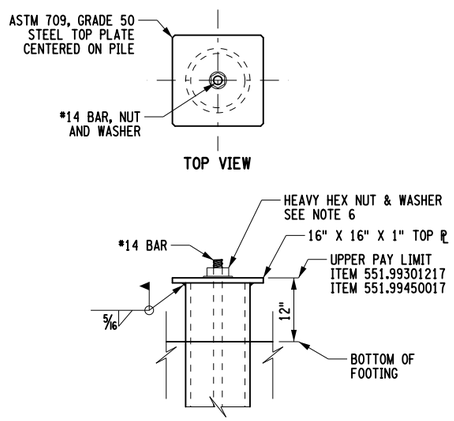

MICROPILE ANCHORAGE ELEVATION
NOT TO SCALE

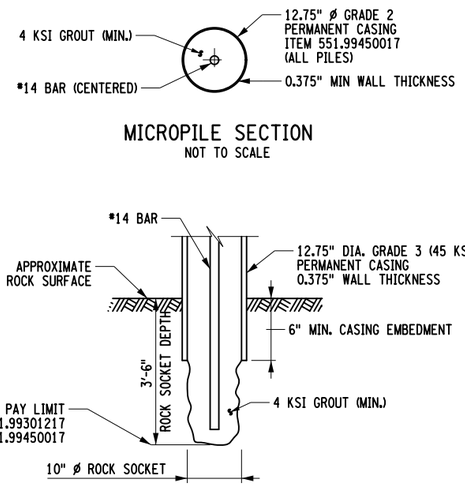

MICROPILE SECTION
NOT TO SCALE

MICROPILE BEARING ELEVATION
NOT TO SCALE

AFFIX SEAL:
ON:

ALTERED BY:
ON:

AS-BUILT REVISIONS
DESCRIPTION OF ALTERATIONS:

TRANSIT ROAD, PART 4, SH1334-A-1	PIN 5813.61	BRIDGES	CULVERTS	ALL DIMENSIONS IN ft UNLESS OTHERWISE NOTED
NY ROUTE 78, TRANSIT ROAD	NY RTE 78	1080550		MICROPILE DETAILS
BIN 1030250 & 1080550 OVER ELLICOTT CREEK				PEDESTRIAN BRIDGE OVER ELLICOTT CREEK
TOWNS OF CHEEKTOWAGA AND LANCASTER				
COUNTY: ERIE REGION: 05				

CONTRACT NUMBER
D264571

DRAWING NO. ST1-10
SHEET NO. 360

IT IS A VIOLATION OF LAW FOR ANY PERSON, UNLESS THEY ARE ACTING UNDER THE DIRECTION OF A LICENSED PROFESSIONAL ENGINEER, ARCHITECT, LANDSCAPE ARCHITECT, OR LAND SURVEYOR, TO ALTER AN ITEM IN ANY WAY. IF AN ITEM BEARING THE STAMP OF A LICENSED PROFESSIONAL IS ALTERED, THE ALTERING ENGINEER, ARCHITECT, LANDSCAPE ARCHITECT, OR LAND SURVEYOR SHALL STAMP THE DOCUMENT AND INCLUDE THE NOTATION "ALTERED BY" FOLLOWED BY THEIR SIGNATURE, THE DATE OF SUCH ALTERATION, AND A SPECIFIC DESCRIPTION OF THE ALTERATION.

NEW YORK STATE OF OPPORTUNITY. Department of Transportation

PROJECT MANAGER R. SCHALLER
CHECK G. GROSS
DRAFTING B. SOKOL
CHECK G. GROSS
DESIGN J. BURRUANO
JOB MANAGER G. GROSS
DESIGN SUPERVISOR N. DUENNEBACKE
FILE NAME = 581361_cpb_1080550_micropile.dgn
DATE/TIME = 22-JUN-2021 11:32
USER = ggross

DECK JOINT NOTES - PREFABRICATED PEDESTRIAN-BICYCLE SUPERSTRUCTURE:

1. DESIGN OF BRIDGE DECK JOINT SYSTEM SHALL BE IN ACCORDANCE WITH REQUIREMENT OF PED-BIKE ITEM (DESIGNED BY MANUFACTURER). JOINT DETAILS AND NOTES SHOWN ARE MINIMUM REQUIREMENTS IF AN ARMORLESS BRIDGE JOINT SYSTEM IS SELECTED BY THE MANUFACTURER OF THE PED-BIKE BRIDGE ITEM. COST OF DECK JOINT DESGIN AND INSTALLATION, INCLUDING MATERIAL AND WORK REQUIRED ON ABUTMENT HEADWALL TO ACCOMDATE BRIDGE DECK JOINT, SHALL BE INCLUDED IN THE PRICE BID FOR PED-BIKE BRIDGE ITEM.

A. THE "JOINT OPENING" AT THE EXPANSION JOINT SHALL BE DETERMINED AT THE TIME OF PLACEMENT, USING THE TABLE PROVIDED ON THIS DRAWING.

B. THE "JOINT OPENING" AT FIXED JOINT SHALL BE 1", AND THE SEAL PROVIDED SHALL BE COMPRESSED A MINIMUM OF 25% WHEN INSTALLED.

C. THE CONTRACTOR SHALL SUPPLY A JOINT SEAL WITH AN UNCOMPRESSED WIDTH EQUAL TO OR GREATER THAN THE DIMENSION NOTED AS "MIN. SEAL WIDTH" IN THE TABLE ABOVE. THE SEAL SUPPLIED SHALL NOT EXCEED THE MANUFACTURES COMPRESSION LIMITS AT THE "MINIMUM OPENING" NOTED IN THE TABLE.

D. THE SUPERSTRUCTURE TEMPERATURE USED TO DETERMINE THE JOINT OPENING SHALL BE THE AVERAGE TEMPERATURE OF THE LOWER PRIMARY MEMBER ELEMENT OF PREFABRICATED SUPERSTRUCTURE. A MINIMUM OF TWO TEMPERATURE READINGS PER SPAN SHALL BE USED TO CALCULATE THE AVERAGE SUPERSTRUCTURE TEMPERATURE.

EXPANSION JOINT OPENING TABLE

SUPERSTRUCTURE TEMPERATURE (°F)	JOINT OPENING (IN.)
30	3
35	3
40	2 7/8
45	2 7/8
50	2 3/4
55	2 3/4
60	2 5/8
65	2 1/2
70	2 1/2
75	2 3/8
80	2 3/8
85	2 1/4
90	2 1/4
95	2 1/8
100	2 1/8
105	2
110	1 7/8

NOTES:
MIN. OPENING (IN.) = 1.875
MAX. OPENING / REQ. MIN. SEAL WIDTH (IN.) = 3.75

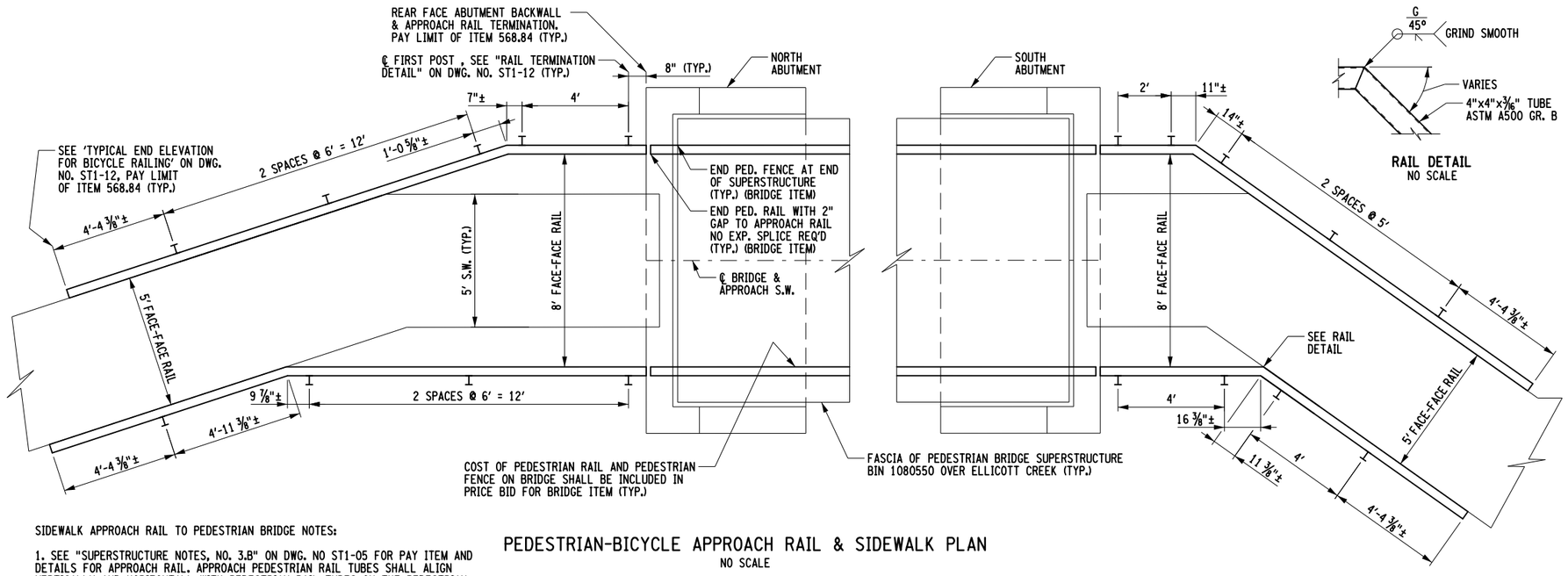

PEDESTRIAN-BICYCLE APPROACH RAIL & SIDEWALK PLAN
NO SCALE

SIDEWALK APPROACH RAIL TO PEDESTRIAN BRIDGE NOTES:

1. SEE "SUPERSTRUCTURE NOTES, NO. 3.B" ON DWG. NO ST1-05 FOR PAY ITEM AND DETAILS FOR APPROACH RAIL. APPROACH PEDESTRIAN RAIL TUBES SHALL ALIGN VERTICALLY AND HORIZONTALL WITH PEDESTRIAN RAIL TUBES ON THE PEDESTRIAN BRIDGE.

2. DIMENSIONS SHOWN ARE MEASURED AT REAR FACE OF RAIL AND ARE FOR ESTIMATING PURPOSES ONLY. SINCE ALIGNMENT OF SIDEWALK MAY ALTER SLIGHTLY (SEE "SUPERSTRUCTURE NOTES, NO. 3") FABRICATION DRAWINGS SHOULD BE PREPARED AFTER FINAL SIDEWALK CONFIGURATION IS DETERMINED AFTER PEDESTRIAN BRIDGE SHOP DRAWINGS ARE APPROVED.

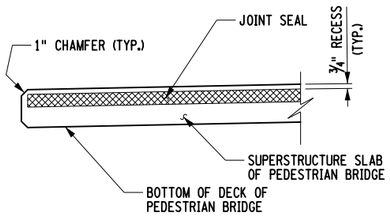

SECTION A-A
NOT TO SCALE

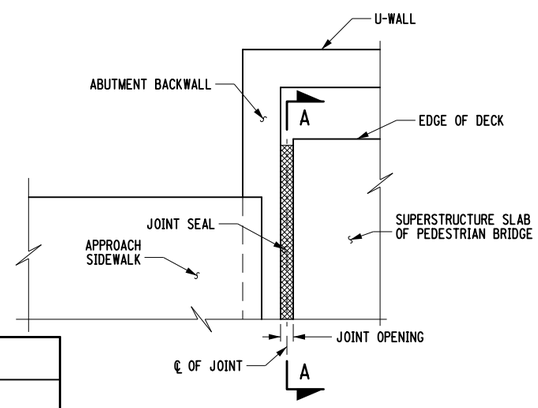

PARTIAL PLAN - DECK JOINT AT ABUTMENT
NOT TO SCALE

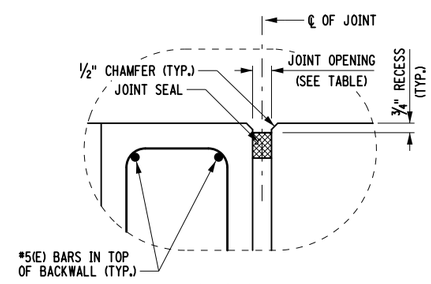

DETAIL "A"
NOT TO SCALE

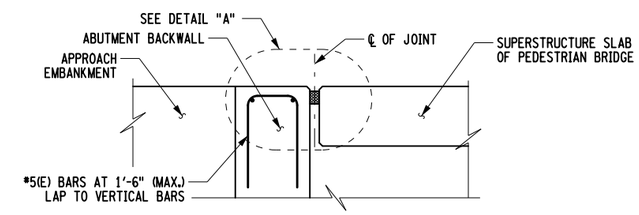

DECK JOINT SECTION - NOT SIDEWALK AREA

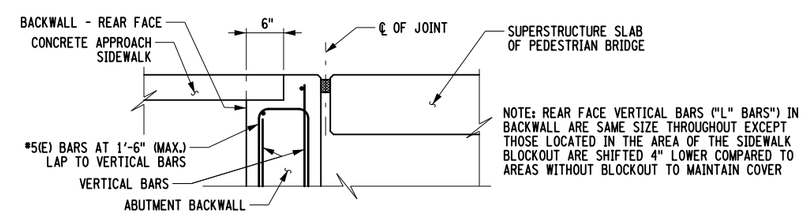

DECK JOINT SECTION - SIDEWALK AREA

DECK JOINT SECTIONS AT ABUTMENT
NOT TO SCALE

AFFIX SEAL:
ON:

ALTERED BY:
ON:

STATE OF NEW YORK
GEOFFREY ROBERT GROSS
D264571
No. 079932
LICENSED PROFESSIONAL ENGINEER
June 16, 2021

AS-BUILT REVISIONS
DESCRIPTION OF ALTERATIONS:

TRANSIT ROAD, PART 4, SH1334-A-1	PIN 5813.61	BRIDGES	CULVERTS	ALL DIMENSIONS IN ft UNLESS OTHERWISE NOTED
NY ROUTE 78, TRANSIT ROAD	NY RTE 78	1080550		JOINT & SIDEWALK APPROACH DETAILS
BIN 1030250 & 1080550 OVER ELLICOTT CREEK				PEDESTRIAN BRIDGE OVER ELLICOTT CREEK
TOWNS OF CHEEKTOWAGA AND LANCASTER				
COUNTY: ERIE REGION: 05				

CONTRACT NUMBER D264571
DRAWING NO. ST1-11
SHEET NO. 361

IT IS A VIOLATION OF LAW FOR ANY PERSON, UNLESS THEY ARE ACTING UNDER THE DIRECTION OF A LICENSED PROFESSIONAL ENGINEER, ARCHITECT, LANDSCAPE ARCHITECT, OR LAND SURVEYOR, TO ALTER AN ITEM IN ANY WAY. IF AN ITEM BEARING THE STAMP OF A LICENSED PROFESSIONAL IS ALTERED, THE ALTERING ENGINEER, ARCHITECT, LANDSCAPE ARCHITECT, OR LAND SURVEYOR SHALL STAMP THE DOCUMENT AND INCLUDE THE NOTATION "ALTERED BY" FOLLOWED BY THEIR SIGNATURE, THE DATE OF SUCH ALTERATION, AND A SPECIFIC DESCRIPTION OF THE ALTERATION.

NEW YORK STATE OF OPPORTUNITY. Department of Transportation

DESIGN SUPERVISOR N. DUENNEBACKE
JOB MANAGER G. GROSS
DESIGN S. FAIZI
CHECK G. GROSS
DRAFTING B. SOKOL
CHECK G. GROSS
PROJECT MANAGER R. SCHALLER
FILE NAME = 581361.cpb.1080550_joint_approach_details.dgn
DATE/TIME = 16-JUN-2021 15:57
USER = ggross

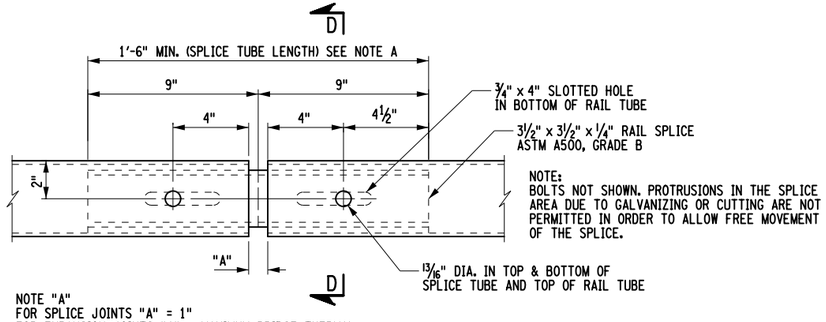

NOTE:
BOLTS NOT SHOWN. PROTRUSIONS IN THE SPLICE AREA DUE TO GALVANIZING OR CUTTING ARE NOT PERMITTED IN ORDER TO ALLOW FREE MOVEMENT OF THE SPLICE.

NOTE "A"
FOR SPLICE JOINTS "A" = 1"
FOR EXPANSION JOINTS "A" = MAXIMUM BRIDGE THERMAL EXPANSION DIMENSION + ¼" (1" MINIMUM) AND SPLICE TUBE LENGTH = 1'-5" + "A"

RAIL SPLICE DETAIL (PEDESTRIAN)

NOT TO SCALE

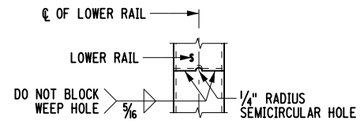

TYPICAL WEEP HOLE DETAIL FOR LOWER RAILS

NOT TO SCALE

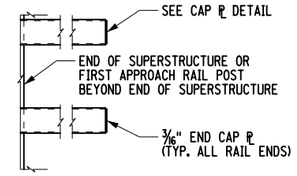

RAIL TERMINATION DETAIL (AT PEDESTRIAN BRIDGE)

NOT TO SCALE

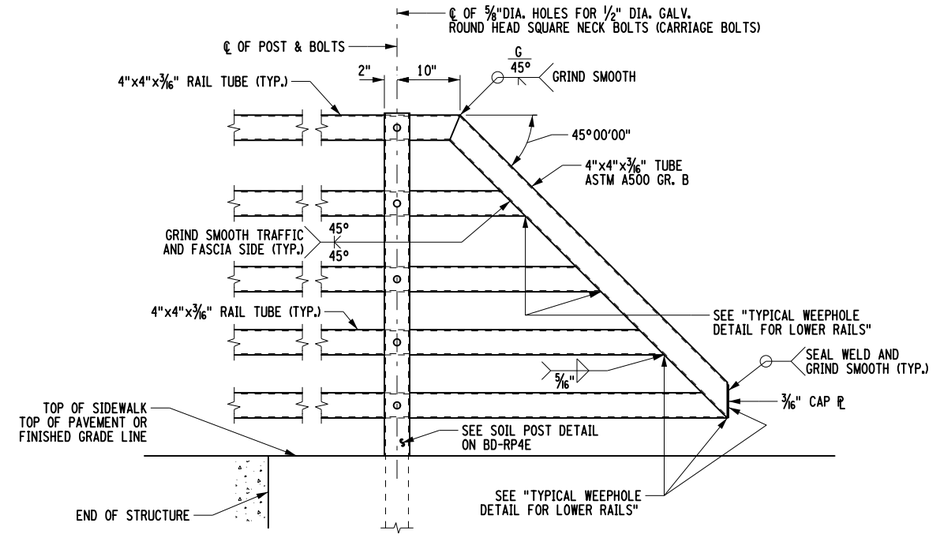

TYPICAL END ELEVATION FOR BICYCLE RAILING

NOT TO SCALE

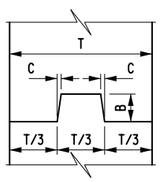

NOTE:
WATERSTOP NOT SHOWN.

VERTICAL

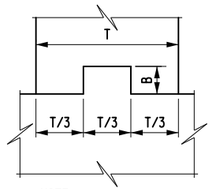

NOTE:
WATERSTOP NOT SHOWN.

HORIZONTAL

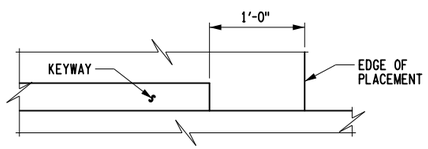

CONSTRUCTION AND CONTRACTION JOINTS		
C	B	T/3
3/16"	1½"	0 TO 6"
⅜"	3½"	6" TO 10"
¾"	5½"	10" AND OVER

KEYWAY DETAILS

NOT TO SCALE

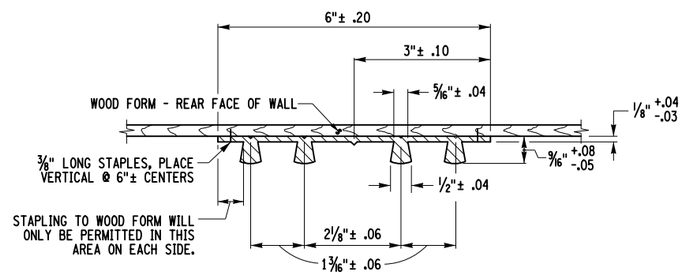

TYPE D WATERSTOP

NOT TO SCALE

WATERSTOP NOTES (TYPE D USED AT CONSTRUCTION OR CONTRACTION JOINTS):

1. HOLES MUST NOT BE MADE IN WATERSTOP FOR ANY PURPOSE EXCEPT AS REQUIRED FOR STAPLING TO FORMS.

2. TYPE D WATERSTOP SHALL BE LIGHT GRAY IN COLOR.

3. PVC USED IN WATERSTOPS SHALL CONFORM TO THE REQUIREMENTS OF SPEC. § 705-11.

4. THE COST OF FURNISHING AND PLACING WATERSTOPS SHALL BE INCLUDED IN THE UNIT PRICES BID FOR THE CONCRETE ITEMS.

5. FIELD SPLICES SHOULD BE AVOIDED IF POSSIBLE, HOWEVER, HEAT WELDED BUTT SPLICES WILL BE PERMITTED ON LONG STRAIGHT RUNS (GENERALLY IN EXCESS OF 50 FEET) AT POINTS APPROVED BY THE ENGINEER.

6. WATERSTOP SHALL BE SHIPPED IN STRAIGHT SECTIONS HAVING A MINIMUM LENGTH OF 10 FEET UNLESS SHORTER LENGTHS ARE REQUIRED.

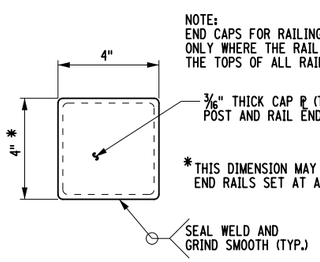

NOTE:
END CAPS FOR RAILING ARE TO BE USED ONLY WHERE THE RAIL TERMINATES AND AT THE TOPS OF ALL RAILING POSTS.

CAP PLATE DETAIL

(TYPICAL FOR TOP OF RAILING POSTS AND RAIL ENDS)

NOT TO SCALE

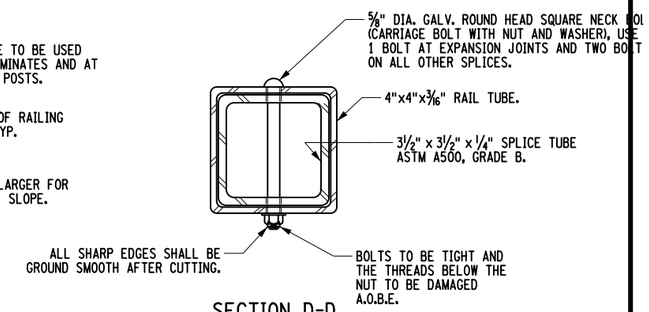

SECTION D-D

NOT TO SCALE

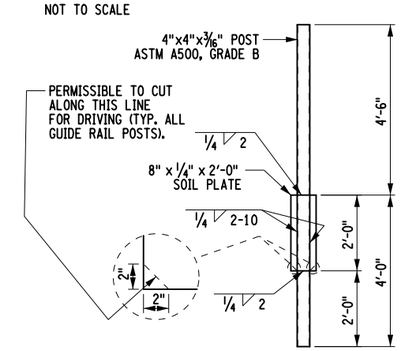

SOIL POST DETAIL FOR BICYCLE BRIDGE RAILING (FIVE RAIL)

(TO BE USED OFF OF THE STRUCTURE)

NOT TO SCALE

NOTES:

1. ALL PEDESTRIAN APPROACH RAIL STEEL TO BE GALVANIZED AFTER WELDING IN ACCORDANCE WITH SPEC. § 719-01.

AFFIX SEAL:
ON:

ALTERED BY:
ON:

STATE OF NEW YORK
GEOFFREY ROBERT GROSS
D264571
No. 079932
LICENSED PROFESSIONAL ENGINEER
June 16, 2021

AS-BUILT REVISIONS DESCRIPTION OF ALTERATIONS:	TRANSIT ROAD, PART 4, SH1334-A-1	PIN 5813.61	BRIDGES 1080550	CULVERTS	ALL DIMENSIONS IN ft UNLESS OTHERWISE NOTED	CONTRACT NUMBER
	NY ROUTE 78, TRANSIT ROAD	NY RTE 78			MISCELLANEOUS DETAILS	D264571
	BIN 1030250 & 1080550 OVER ELLICOTT CREEK				PEDESTRIAN BRIDGE OVER ELLICOTT CREEK	DRAWING NO. ST1-12
	TOWNS OF CHEEKTOWAGA AND LANCASTER					SHEET NO. 362
	COUNTY: ERIE REGION: 05					

IT IS A VIOLATION OF LAW FOR ANY PERSON, UNLESS THEY ARE ACTING UNDER THE DIRECTION OF A LICENSED PROFESSIONAL ENGINEER, ARCHITECT, LANDSCAPE ARCHITECT, OR LAND SURVEYOR, TO ALTER AN ITEM IN ANY WAY. IF AN ITEM BEARING THE STAMP OF A LICENSED PROFESSIONAL IS ALTERED, THE ALTERING ENGINEER, ARCHITECT, LANDSCAPE ARCHITECT, OR LAND SURVEYOR SHALL STAMP THE DOCUMENT AND INCLUDE THE NOTATION "ALTERED BY" FOLLOWED BY THEIR SIGNATURE, THE DATE OF SUCH ALTERATION, AND A SPECIFIC DESCRIPTION OF THE ALTERATION.

NEW YORK STATE OF OPPORTUNITY. Department of Transportation

PROJECT MANAGER R. SCHALLER
CHECK G. GROSS
DRAFTING B. SOKOL
CHECK G. GROSS
DESIGN S. FAIZI
JOB MANAGER G. GROSS
DESIGN SUPERVISOR N. DUENNEBACKE
FILE NAME = 581361.cpb.1080550.msc.details.dgn
DATE/TIME = 16-JUN-2021 15:58
USER = ggross

MARK	NO.	LENGTH	TYPE	WEIGHT	A	B	C	D	E	F	G	H/H1	H2	J	K/K1	K2	L	O	R
NORTH ABUTMENT - FOOTING																			
5AE1	12	12-6	N1	156														12-6	
5AE2	20	5-6	N1	115														5-6	
5AE3	12	5-4	2	67	0-9¾	4-6					0-0								
5AE4	10	4-6	N1	47														4-6	
		AVG.				AVG.													
5AE5	6	4-3	2	27	0-9¾	3-5					0-0								
5AE5	B	VARIES	FROM		4-2	TO	2-8	(2	SETS OF	3)									
		AVG.																AVG.	
5AE6	6	3-5	N1	21														3-5	
5AE6	0	VARIES	FROM		4-2	TO	2-8	(2	SETS OF	3)									
SUBTOTAL EPOXY BARS				433	LB THIS POUR														
NORTH ABUTMENT - BACKWALL AND CHEEKWALL																			
5WE7	16	2-8	17	45		1-0	0-8	1-0											
5WE8	4	4-5	N1	18														4-5	
5WE9	8	12-8	N1	106														12-8	
5WE10	8	5-8	N1	47														5-8	
		AVG.																AVG.	
5WE11	8	2-8	N1	22														2-8	
5WE11	0	VARIES	FROM		1-8	TO	3-8	(4	SETS OF	2)									
SUBTOTAL EPOXY BARS				238	LB THIS POUR														
SOUTH ABUTMENT - FOOTING																			
5AE1	12	12-6	N1	156														12-6	
5AE2	20	5-6	N1	115														5-6	
5AE3	12	5-4	2	67	0-9¾	4-6					0-0								
5AE4	10	4-6	N1	47														4-6	
		AVG.				AVG.													
5AE5	6	4-3	2	27	0-9¾	3-5					0-0								
5AE5	B	VARIES	FROM		4-2	TO	2-8	(2	SETS OF	3)									
		AVG.																AVG.	
5AE6	6	3-5	N1	21														3-5	
5AE6	0	VARIES	FROM		4-2	TO	2-8	(2	SETS OF	3)									
SUBTOTAL EPOXY BARS				433	LB THIS POUR														
SOUTH ABUTMENT - BACKWALL AND CHEEKWALL																			
5WE7	16	2-8	17	45		1-0	0-8	1-0											
5WE8	4	4-5	N1	18														4-5	
5WE9	8	12-8	N1	106														12-8	
5WE10	8	5-8	N1	47														5-8	
		AVG.																AVG.	
5WE11	8	2-8	N1	22														2-8	
5WE11	0	VARIES	FROM		1-8	TO	3-8	(4	SETS OF	2)									
SUBTOTAL EPOXY BARS				238	LB THIS POUR														
TOTAL EPOXY BARS				1341	LB IN ABUTMENT														

MARK	NO.	LENGTH	TYPE	WEIGHT	A	B	C	D	E	F	G	H/H1	H2	J	K/K1	K2	L	O	R
TOTAL EPOXY BARS				1341	LB ENTIRE STRUCTURE														

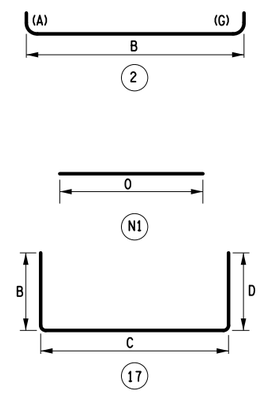

AFFIX SEAL:
ON:

ALTERED BY:
ON:

STATE OF NEW YORK
GEOFFREY ROBERT GROSS
D264571
No. 079932
LICENSED PROFESSIONAL ENGINEER
June 16, 2021

AS-BUILT REVISIONS
DESCRIPTION OF ALTERATIONS:

TRANSIT ROAD, PART 4, SH1334-A-1
NY ROUTE 78, TRANSIT ROAD
BIN 1030250 & 1080550 OVER ELLICOTT CREEK
TOWNS OF CHEEKTOWAGA AND LANCASTER
COUNTY: ERIE REGION: 05

PIN 5813.61
NY RTE 78

BRIDGES
1080550

CULVERTS

ALL DIMENSIONS IN ft UNLESS OTHERWISE NOTED

BAR LIST

PEDESTRIAN BRIDGE
OVER
ELLICOTT CREEK

CONTRACT NUMBER
D264571

DRAWING NO. ST1-13
SHEET NO. 363

IT IS A VIOLATION OF LAW FOR ANY PERSON, UNLESS THEY ARE ACTING UNDER THE DIRECTION OF A LICENSED PROFESSIONAL ENGINEER, ARCHITECT, LANDSCAPE ARCHITECT, OR LAND SURVEYOR, TO ALTER AN ITEM IN ANY WAY. IF AN ITEM BEARING THE STAMP OF A LICENSED PROFESSIONAL IS ALTERED, THE ALTERING ENGINEER, ARCHITECT, LANDSCAPE ARCHITECT, OR LAND SURVEYOR SHALL STAMP THE DOCUMENT AND INCLUDE THE NOTATION "ALTERED BY" FOLLOWED BY THEIR SIGNATURE, THE DATE OF SUCH ALTERATION, AND A SPECIFIC DESCRIPTION OF THE ALTERATION.

NEW YORK STATE OF OPPORTUNITY. Department of Transportation

PROJECT MANAGER R. SCHALLER
CHECK G. GROSS
DRAFTING B. SOKOL
CHECK G. GROSS
DESIGN S. FAIZI
CHECK G. GROSS
JOB MANAGER G. GROSS
DESIGN SUPERVISOR N. DUENNEBACKE
FILE NAME = 581361.cpb.1080550.barlist.dgn
DATE/TIME = 16-JUN-2021 15:58
USER = ggross

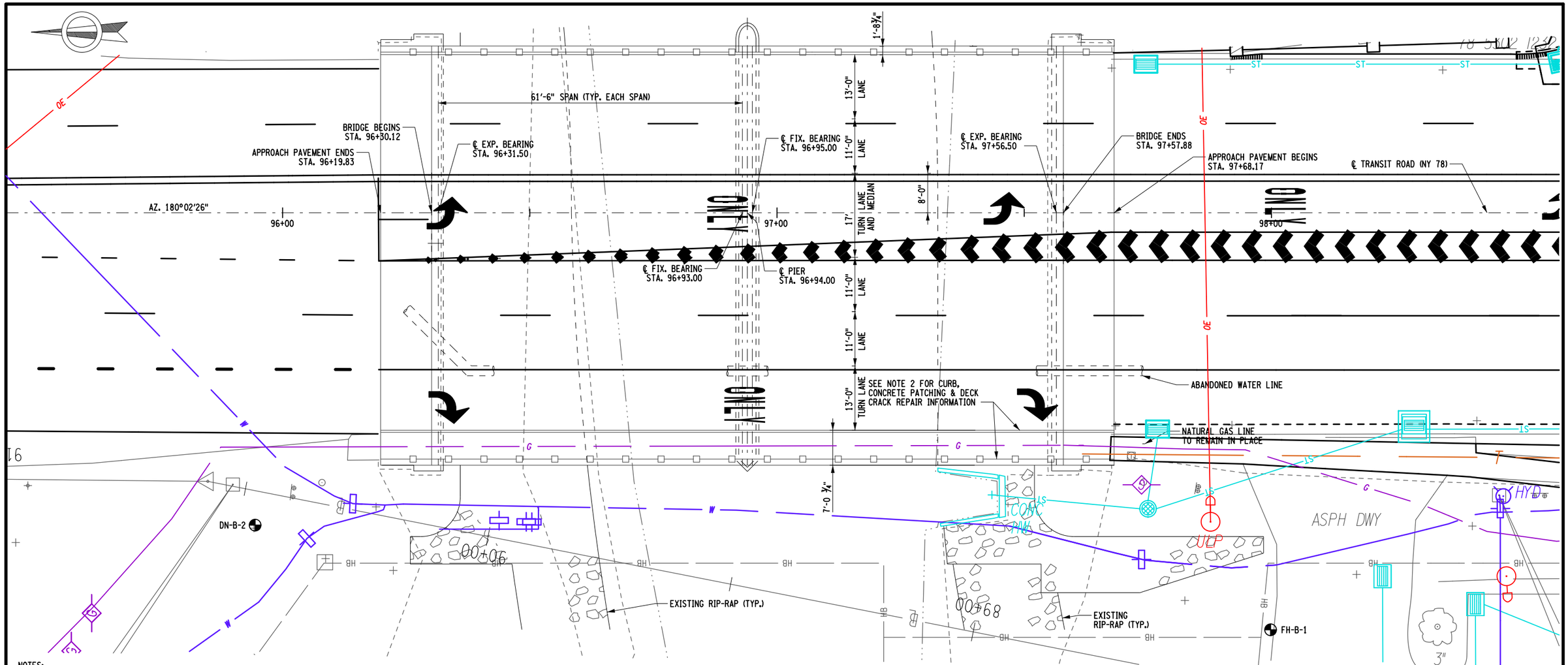

NOTES:
1. EQUALITY STATION AT NEARBY INTERSECTION OF NY 78 WITH NY 33:
NY 78 ℄ STA 99+58.04 = NY 33 ℄ STA. G 285+25.00

2. SEE TYPICAL SECTIONS (DWG. NO. ST2-02) FOR WORK ITEMS RELATED TO DECK CRACK REPAIR, ISOLATED SIDEWALK AND FASCIA CONCRETE PATCHING, STEEL BRIDGE RAIL TUBE REPLACEMENT AND CURB REMOVAL/RESET.

3. SEE DWG. NO. ST1-03 FOR BRIDGE PROFILE INFORMATION.

BRIDGE PLAN - PROPOSED

10 0 10 20 30 40'

1" = 20'

AFFIX SEAL:
ON:

ALTERED BY:
ON:

AS-BUILT REVISIONS
DESCRIPTION OF ALTERATIONS:

TRANSIT ROAD, PART 4, SH1334-A-1
NY ROUTE 78, TRANSIT ROAD
BIN 1030250 & 1080550 OVER ELLICOTT CREEK
TOWNS OF CHEEKTOWAGA AND LANCASTER
COUNTY: ERIE REGION: 05

PIN 5813.61
NY RTE 78

BRIDGES
1030250

CULVERTS

ALL DIMENSIONS IN ft UNLESS OTHERWISE NOTED

GENERAL BRIDGE PLAN AND PROFILE

N.Y. ROUTE 78
OVER
ELLICOTT CREEK

CONTRACT NUMBER
D264571

DRAWING NO. ST2-01
SHEET NO. 364

IT IS A VIOLATION OF LAW FOR ANY PERSON, UNLESS THEY ARE ACTING UNDER THE DIRECTION OF A LICENSED PROFESSIONAL ENGINEER, ARCHITECT, LANDSCAPE ARCHITECT, OR LAND SURVEYOR, TO ALTER AN ITEM IN ANY WAY. IF AN ITEM BEARING THE STAMP OF A LICENSED PROFESSIONAL IS ALTERED, THE ALTERING ENGINEER, ARCHITECT, LANDSCAPE ARCHITECT, OR LAND SURVEYOR SHALL STAMP THE DOCUMENT AND INCLUDE THE NOTATION "ALTERED BY" FOLLOWED BY THEIR SIGNATURE, THE DATE OF SUCH ALTERATION, AND A SPECIFIC DESCRIPTION OF THE ALTERATION.

NEW YORK STATE OF OPPORTUNITY. Department of Transportation

PROJECT MANAGER R. SCHALLER
CHECK G. GROSS
DRAFTING B. SOKOL
CHECK G. GROSS
DESIGN S. FAIZI
JOB MANAGER G. GROSS
DESIGN SUPERVISOR N. DUENNEBACKE

FILE NAME = 581361_cpb_1030250_gen.dgn
DATE/TIME = 22-JUN-2021 11:47
USER = ggr-oss

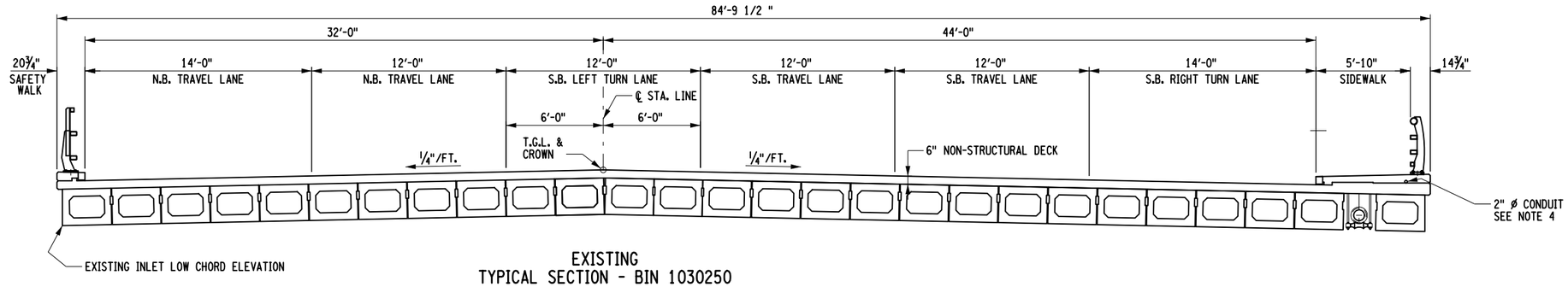

EXISTING
TYPICAL SECTION - BIN 1030250

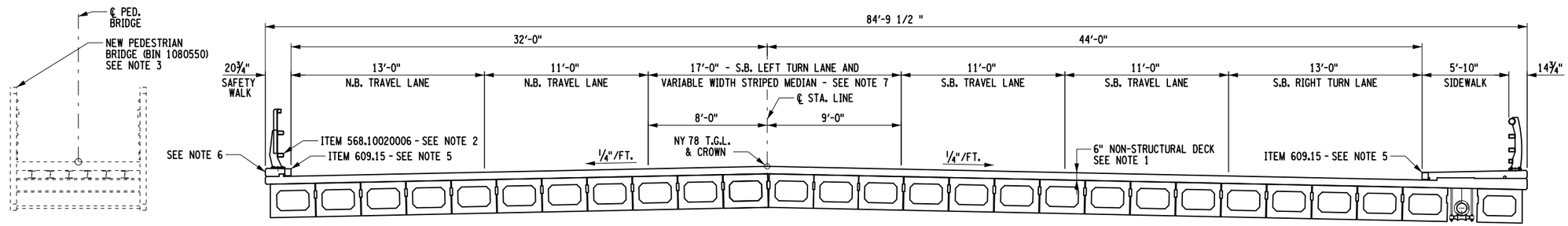

PROPOSED
TYPICAL SECTION

NOTES:

1. CRACKS IN DECK TO BE SEALED IN ACCORDANCE WITH ITEM 557.25000116. SEE DECK REHABILITATION PLAN ON DWG. ST2-07 FOR LOCATIONS.

2. REPLACE BRIDGE RAIL TUBES IN ACCORDANCE WITH ITEM 568.10020006 AT LOCATIONS SHOWN ON DWG. ST2-07 (INCLUDE TUBE SPLICE REPLACEMENT IN PRICE BID FOR ITEM).

3. SEE DWG. ST1-01 FOR PREFABRICATED PEDESTRIAN-BICYCLE SUPERSTRUCTURE PLAN.

4. NYSDOT TRAFFIC SIGNAL CONDUIT: COST OF ANY WORK RELATED TO CONDUIT, WIRING AND COORDINATION OF WORK WITH BRIDGE WORK SHALL BE INCLUDED IN THE VARIOUS TRAFFIC SIGNAL ITEMS (HIGHWAY SHARE).

5. GRANITE BRIDGE CURB, TYPE F1, TO BE REMOVED AND RESET IN ACCORDANCE WITH ITEM 609.15. SEE DECK REHABILITATION PLAN ON DWG. ST2-07 FOR LOCATIONS.

6. CONCRETE DEFECTS REQUIRING REPAIR AOBE ON ANY SURFACE OF SIDEWALK OR BRIDGE FASCIA TO BE REPAIRED IN ACCORDANCE WITH ITEM 582.06. SEE DECK REHABILITATION PLAN ON DWG. ST2-07 FOR LOCATIONS.

7. SEE HIGHWAY PLANS FOR SOUTHBOUND LEFT TURN LANE & STRIPED MEDIAN CONFIGURATION (VARIABLE LANE WIDTH, 11' MAX.; VARIABLE MEDIAN WIDTH, 6' (MAX.).

AFFIX SEAL:
ON:

ALTERED BY:
ON:

STATE OF NEW YORK
GEOFFREY ROBERT GROSS
LICENSED PROFESSIONAL ENGINEER
D264571
No. 079932
June 16, 2021

4 0 4 8 12 16'
1/8" = 1'

AS-BUILT REVISIONS
DESCRIPTION OF ALTERATIONS:

TRANSIT ROAD, PART 4, SH1334-A-1
NY ROUTE 78, TRANSIT ROAD
BIN 1030250 & 1080550 OVER ELLICOTT CREEK
TOWNS OF CHEEKTOWAGA AND LANCASTER
COUNTY: ERIE REGION: 05

PIN 5813.61
NY RTE 78

BRIDGES
1030250

CULVERTS

ALL DIMENSIONS IN ft UNLESS OTHERWISE NOTED

TYPICAL BRIDGE TRANSVERSE SECTIONS

N.Y. ROUTE 78
OVER
ELLICOTT CREEK

CONTRACT NUMBER
D264571

DRAWING NO. ST2-02
SHEET NO. 365

IT IS A VIOLATION OF LAW FOR ANY PERSON, UNLESS THEY ARE ACTING UNDER THE DIRECTION OF A LICENSED PROFESSIONAL ENGINEER, ARCHITECT, LANDSCAPE ARCHITECT, OR LAND SURVEYOR, TO ALTER AN ITEM IN ANY WAY. IF AN ITEM BEARING THE STAMP OF A LICENSED PROFESSIONAL IS ALTERED, THE ALTERING ENGINEER, ARCHITECT, LANDSCAPE ARCHITECT, OR LAND SURVEYOR SHALL STAMP THE DOCUMENT AND INCLUDE THE NOTATION "ALTERED BY" FOLLOWED BY THEIR SIGNATURE, THE DATE OF SUCH ALTERATION, AND A SPECIFIC DESCRIPTION OF THE ALTERATION.

NEW YORK STATE OF OPPORTUNITY. Department of Transportation

PROJECT MANAGER R. SCHALLER
CHECK G. GROSS
DRAFTING B. SOKOL
CHECK G. GROSS
DESIGN S. FAIZI
JOB MANAGER G. GROSS
DESIGN SUPERVISOR N. DUENNEBACKE
FILE NAME = 581361_cpb_1030250_typ_sec_minor rehab version.dgn
DATE/TIME = 16-JUN-2021 15:58
USER = ggross

ESTIMATE OF QUANTITIES - BIN 1030250

ITEM NO.	DESCRIPTION	UNIT	ESTIMATED	FINAL
553.030001	TEMPORARY WATERWAY DIVERSION STRUCTURE	EA	1	
557.25000016	CRACK SEALING USING HIGH MOLECULAR WEIGHTMETHACRYLATE - LINEAR CRACKS	LF	850	
559.16960118	PROTECTIVE SEALING OF STRUCTURAL CONCRETE	SF	3478	
559.17960118	PROTECTIVE SEALING OF STRUCTURAL CONCRETE FOR EXISTING BRIDGE DECKS	SF	10833	
568.10020006	REMOVE AND REPLACE BRIDGE RAIL TUBING	LF	149	
582.06	REMOVAL OF STRUCTURAL CONCRETE - REPLACEMENT WITH CLASS D CONCRETE	SF	82	
609.15	RESETTING EXISTING CURB	LF	100	

THIS ESTIMATE OF QUANTITIES DOES NOT NECESSARILY INCLUDE ALL ITEMS IN THE BRIDGE FISCAL SHARE.

INDEX - REHABILITATION - BIN 1030250

NY 78 (TRANSIT RD.) OVER ELLICOTT CREEK

SHEET NUMBER	DESCRIPTION	DRAWING NUMBER
364	GENERAL PLAN & ELEVATION	ST2-01
365	TYPICAL SECTIONS	ST2-02
366	ESTIMATE OF QUANTITIES & INDEX	ST2-03
367	GENERAL NOTES	ST2-04
368	ABUTMENT ELEVATIONS	ST2-05
369	PIER ELEVATIONS	ST2-06
370	SUPERSTRUCTURE & APPROACH SLAB PLAN	ST2-07
371	BRIDGE RAIL & MISC. DETAILS	ST2-08

PROJECT MANAGER R. SCHALLER
CHECK G. GROSS
DRAFTING B. SOKOL
CHECK G. GROSS
DESIGN G. FAIZI
JOB MANAGER G. GROSS
DESIGN SUPERVISOR N. DUENNEBACKE

FILE NAME = 581361.cpb.1030250.est_index.dgn
DATE/TIME = 16-JUN-2021 15:58
USER = ggross

AFFIX SEAL:
ON:

ALTERED BY:
ON:

AS-BUILT REVISIONS
DESCRIPTION OF ALTERATIONS:

TRANSIT ROAD, PART 4, SH1334-A-1
NY ROUTE 78, TRANSIT ROAD
BIN 1030250 & 1080550 OVER ELLICOTT CREEK
TOWNS OF CHEEKTOWAGA AND LANCASTER
COUNTY: ERIE REGION: 05

PIN 5813.61
NY RTE 78

BRIDGES
1030250

CULVERTS

ALL DIMENSIONS IN ft UNLESS OTHERWISE NOTED

ESTIMATE OF QUANTITIES & INDEX

N.Y. ROUTE 78
OVER
ELLICOTT CREEK

CONTRACT NUMBER
D264571

DRAWING NO. ST2-03
SHEET NO. 366

IT IS A VIOLATION OF LAW FOR ANY PERSON, UNLESS THEY ARE ACTING UNDER THE DIRECTION OF A LICENSED PROFESSIONAL ENGINEER, ARCHITECT, LANDSCAPE ARCHITECT, OR LAND SURVEYOR, TO ALTER AN ITEM IN ANY WAY. IF AN ITEM BEARING THE STAMP OF A LICENSED PROFESSIONAL IS ALTERED, THE ALTERING ENGINEER, ARCHITECT, LANDSCAPE ARCHITECT, OR LAND SURVEYOR SHALL STAMP THE DOCUMENT AND INCLUDE THE NOTATION "ALTERED BY" FOLLOWED BY THEIR SIGNATURE, THE DATE OF SUCH ALTERATION, AND A SPECIFIC DESCRIPTION OF THE ALTERATION.

NEW YORK STATE OF OPPORTUNITY. Department of Transportation

GENERAL NOTES:

1. CONSTRUCTION AND MATERIALS SPECIFICATIONS: STANDARD SPECIFICATIONS, CONSTRUCTION AND MATERIALS, NEW YORK STATE DEPARTMENT OF TRANSPORTATION, OFFICE OF ENGINEERING WITH ALL PROVISIONS IN EFFECT AS OF JUNE 2021 (FOR CONSTRUCTION PURPOSES, MINIMUM COMPRESSIVE STRENGTH OF STRUCTURAL CONCRETE REQUIRED AT 28 DAYS: f'c = 3,000 psi UNLESS OTHERWISE NOTED).

2. DETAILS ON THE DRAWINGS LABELED AS "NOT TO SCALE" ARE INTENTIONALLY DRAWN NOT TO SCALE FOR VISUAL CLARITY. ALL OTHER DETAILS FOR WHICH NO SCALE IS SHOWN ARE DRAWN PROPORTIONAL AND ARE FULLY DIMENSIONED.

GENERAL NOTES (CONT'D):

3. ALL SHOP DRAWINGS SUBMITTED FOR THIS PROJECT SHALL BE IN US CUSTOMARY UNITS.

4. THESE BRIDGES SHALL BE MAINTAINED IN ACCORDANCE WITH THE GUIDELINES CONTAINED IN THE CURRENT EDITION OF THE AASHTO MAINTENANCE MANUAL FOR ROADWAYS AND BRIDGES.

5. HIGH VOLTAGE ELECTRICAL LINES ARE IN PROXIMITY TO THIS BRIDGE.

6. THE LOAD RATINGS ARE IN ACCORDANCE WITH THE AASHTO MANUAL FOR BRIDGE EVALUATION.

BIN 1030250 - NY 78 (TRANSIT RD.) OVER ELLICOTT CREEK

GENERAL NOTES:

1. DESIGN SPECIFICATIONS: NEW YORK STATE DEPARTMENT OF TRANSPORTATION STANDARD SPECIFICATIONS FOR HIGHWAY BRIDGES WITH ALL PROVISIONS IN EFFECT AS OF JUNE 2021 (FOR DESIGN PURPOSES, MINIMUM COMPRESSIVE STRENGTH OF STRUCTURAL CONCRETE AT 28 DAYS: f'c = 3,000 psi UNLESS OTHERWISE NOTED).

2. LIVE LOAD: HS-20

RECONSTRUCTION NOTES:

1. DUE TO THE NATURE OF RECONSTRUCTION PROJECTS, THE EXACT EXTENT OF RECONSTRUCTION WORK CANNOT BE ACCURATELY DETERMINED PRIOR TO THE COMMENCEMENT OF WORK. THESE CONTRACT DOCUMENTS HAVE BEEN PREPARED BASED ON FIELD INSPECTION AND OTHER INFORMATION AVAILABLE AT THE TIME. ACTUAL FIELD CONDITIONS MAY REQUIRE MODIFICATIONS TO CONSTRUCTION DETAILS AND WORK QUANTITIES. THE CONTRACTOR SHALL PERFORM THE WORK IN ACCORDANCE WITH FIELD CONDITIONS.

2. THE CONTRACTOR SHALL VERIFY DIMENSIONS NECESSARY FOR THE PROPER FIT OF STEEL RAIL PIECES PRIOR TO THE FABRICATION OF THE STEEL. THE COST OF FIELD VERIFYING DIMENSIONS SHALL BE INCLUDED IN THE PRICE BID FOR STEEL OR RAIL ITEMS.

3. SHOP DRAWING SUBMITTALS ARE NOT REQUIRED FOR THE FOLLOWING:
BRIDGE RAIL TUBE REPLACEMENT - ITEM 568.10020006.

4. THE CONTRACTOR SHALL PERFORM ALL WORK WITH CARE SO THAT ANY MATERIALS WHICH ARE TO REMAIN IN PLACE, OR WHICH ARE TO REMAIN THE PROPERTY OF THE STATE, WILL NOT BE DAMAGED. IF THE CONTRACTOR DAMAGES ANY MATERIALS WHICH ARE TO REMAIN IN PLACE OR WHICH ARE TO REMAIN THE PROPERTY OF THE STATE, THE DAMAGED MATERIALS SHALL BE REPAIRED OR REPLACED IN A MANNER SATISFACTORY TO THE ENGINEER AT THE EXPENSE OF THE CONTRACTOR.

5. WHENEVER ITEMS IN THE CONTRACT REQUIRE MATERIALS TO BE REMOVED AND DISPOSED OF, THE COST OF SUPPLYING A DISPOSAL AREA AND TRANSPORTATION TO THAT AREA SHALL BE INCLUDED IN THE UNIT PRICES BID FOR THOSE ITEMS.

6. DURING REMOVAL OPERATIONS, THE CONTRACTOR SHALL NOT DROP WASTE CONCRETE, DEBRIS, AND OTHER MATERIAL TO THE AREA BELOW THE BRIDGE EXCEPT WHERE THE PLANS SPECIFICALLY PERMIT THE DROPPING OF MATERIAL. PLATFORMS, NETS, SCREENS OR OTHER PROTECTIVE DEVICES SHALL BE USED TO CATCH THE MATERIAL. IF ADEQUATE PROTECTIVE DEVICES ARE NOT BEING EMPLOYED, THE WORK WILL BE STOPPED UNTIL ADEQUATE PROTECTION IS PROVIDED.

7. ALL MATERIAL FALLING ON THE AREA BELOW AND ADJACENT TO THE BRIDGE SHALL BE REMOVED AND DISPOSED OF BY THE CONTRACTOR AT NO COST TO THE STATE.

8. THE COST OF FURNISHING, INSTALLING, MAINTAINING, REMOVING AND DISPOSING OF ALL PLATFORMS, NETS, SCREENS OR OTHER PROTECTIVE DEVICES SHALL BE INCLUDED IN THE PRICES BID FOR THE APPROPRIATE ITEMS OF THE CONTRACT.

9. THE DETAILS ON SUBSTRUCTURE DRAWINGS INDICATE THE SPALLS, SCALES AND CRACKS NOTED ON A FIELD INSPECTION BY THE DESIGNER. ALL MAJOR AREAS OF SPALLING, SCALING, AND CRACKING KNOWN TO EXIST AT THE TIME OF CONTRACT PREPARATION HAVE BEEN SHOWN TO INDICATE THE APPROXIMATE EXTENT OF DETERIORATION THAT WILL HAVE TO BE REPAIRED BY THE CONTRACTOR.

10. THE CONTRACTOR SHALL PROVIDE THE ENGINEER ACCESS TO ALL PIER SURFACES FOR SOUNDING TO DETERMINE AND MARK OUT FINAL REMOVAL LIMITS. THE ENGINEER WILL SUBMIT LABELED DIGITAL PHOTOS OF THE PIER TO THE REGIONAL STRUCTURES ENGINEER ALONG WITH THE CONTRACTOR'S PROPOSED REMOVAL AND REPLACEMENT SEQUENCE FOR APPROVAL. 10 CALENDAR DAYS SHALL BE ALLOWED FOR REVIEW AND APPROVAL. REMOVAL OF CONCRETE SHALL NOT COMMENCE WITHOUT AN APPROVED REMOVAL PLAN. THE COST FOR THESE ITEMS SHALL BE INCLUDED IN THE REMOVAL AND REPLACEMENT CONCRETE ITEMS.

RECONSTRUCTION NOTES (CONT'D):

11. PIER STEM AND ABUTMENT STEM: AREAS OF CONCRETE DETERIORATION SHALL BE REPAIRED USING ITEM 582.06 - REMOVAL OF STRUCTURAL CONCRETE - REPLACEMENT WITH CLASS D CONCRETE AS SHOWN ON THE PLANS OR AS ORDERED BY THE ENGINEER. DETERIORATED AREAS REQUIRING REMOVAL DEEPER THAN THAT ALLOWED BY ITEM 582.06 SHALL BE REPAIRED IN ACCORDANCE WITH THE REQUIREMENTS OF ITEM 582.05 - REMOVAL OF STRUCTURAL CONCRETE - REPLACEMENT WITH CLASS A CONCRETE WITH COST INCLUDED IN PRICE BID FOR ITEM 582.06.

12. ALL CONCRETE SURFACES RECEIVING NEW CONCRETE SHALL BE SANDBLASTED. PRIOR TO THE APPLICATION OF NEW CONCRETE, THE SURFACES SHALL BE AIR CLEANED THEN PRE-WET FOR 12 HOURS. THERE WILL BE NO SEPARATE PAYMENT FOR THIS WORK. THE COST SHALL BE INCLUDED IN THE PRICES BID FOR THE VARIOUS CONCRETE ITEMS IN THE CONTRACT.

13. UPON COMPLETION OF REPAIR WORK, TOP SURFACES OF EXISTING BRIDGE DECK AND SIDEWALK SHALL BE SEALED IN ACCORDANCE WITH ITEM 559.17960118 - PROTECTIVE SEALING OF STRUCTURAL CONCRETE FOR EXISTING BRIDGE DECKS. PAY LIMIT FOR DECK SEALING SHALL INCLUDE THE EXPOSED SURFACES OF THE DECK FASCIA AND FASCIA PORTION OF THE EXTERIOR GIRDER.

14. THE FOLLOWING CONCRETE ELEMENTS SHALL BE SEALED ACCORDING TO ITEM 559.16960118 - PROTECTIVE SEALING OF STRUCTURAL CONCRETE:

A. (NORTH) BRIDGE ABUTMENT STEM (LOWER PAY LIMIT 5' BELOW BRIDGE SEAT)
B. (SOUTH) BRIDGE ABUTMENT STEM (LOWER PAY LIMIT 4' BELOW BRIDGE SEAT)
C. WINGWALL/U-WALL TOP AND STEM (SAME LOWER PAY LIMIT AS ABUTMENT STEM)
D. PIER STEM (LOWER PAY LIMIT 8' BELOW BRIDGE SEAT)

15. IF THE STRUCTURE HAS A BRIDGE IDENTIFICATION NUMBER (B.I.N.) PLATE ATTACHED, THE CONTRACTOR SHALL PROTECT IT DURING CONSTRUCTION OR REMOVE AND REMOUNT IT AFTER CONSTRUCTION IS COMPLETED.

16. THE CONTRACTOR SHALL KEEP ALL BRIDGE DRAINS CLEAN AND FREE FLOWING DURING THE LIFE OF THE CONTRACT. THE COST SHALL BE INCLUDED IN THE PRICES BID FOR THE VARIOUS SUPERSTRUCTURE ITEMS IN THE CONTRACT.

17. CONDUIT CAUTION NOTE: CONDUITS MAY BE PRESENT IN THE STRUCTURAL SLABS, PARAPETS, OR SIDEWALKS OF BRIDGES RECEIVING NEW OR REWORKED JOINT SYSTEMS. THEIR EXISTENCE AND LOCATIONS SHALL BE FIELD VERIFIED. IF CONDUITS ARE PRESENT AND ARE ENCOUNTERED DURING CONSTRUCTION OPERATIONS, CARE SHALL BE EXERCISED NOT TO DAMAGE CONDUITS, EXPANSION COUPLINGS, OR CONTENTS OF CONDUITS. ANY DAMAGE SHALL BE REPAIRED TO THE SATISFACTION OF THE ENGINEER, AT NO COST TO THE STATE.

SUBSTRUCTURE NOTES:

1. AREAS OF CONCRETE DETERIORATION REPAIRED (RECONSTRUCTION NOTE NO. 11) AT PIER REQUIRE WATER DIVERSION ITEM 553.030001. FOR OHW, OW AND LW ELEVATIONS, SEE GENERAL NOTES SHEET FOR BIN 1080550.

WORK ZONE TRAFFIC CONTROL (WZTC):

1. SHOULDER AND LANE CLOSURES NECESSARY FOR ALL PHASES OF BRIDGE REHABILITATION SHALL BE ACCOMPLISHED USING DETAILS FOUND FOR PHASE 2 CONSTRUCTION (DWG WZ2-1 TO WZ2-3), STANDARD SHEET DETAILS AND/OR IN COORDINATION WITH LANE CLOSURES UTILIZED FOR HIGHWAY OPERATIONS. SEE GENERAL NOTES SHEET(S) IN HIGHWAY PLANS FOR SUGGESTED CONSTRUCTION SEQUENCING AND WZTC TIME, HOLIDAY AND EVENT RESTRICTIONS.

AFFIX SEAL:
ON:

ALTERED BY:
ON:

STATE OF NEW YORK
GEOFFREY ROBERT GROSS
D264571
No. 079932
LICENSED PROFESSIONAL ENGINEER
June 22 2021

AS-BUILT REVISIONS
DESCRIPTION OF ALTERATIONS:

TRANSIT ROAD, PART 4, SH1334-A-1	PIN 5813.61	BRIDGES	CULVERTS	ALL DIMENSIONS IN ft UNLESS OTHERWISE NOTED
NY ROUTE 78, TRANSIT ROAD	NY RTE 78	1030250		GENERAL NOTES
BIN 1030250 & 1080550 OVER ELLICOTT CREEK				N.Y. ROUTE 78 OVER ELLICOTT CREEK
TOWNS OF CHEEKTOWAGA AND LANCASTER				
COUNTY: ERIE REGION: 05				

CONTRACT NUMBER D264571

DRAWING NO. ST2-04

SHEET NO. 367

IT IS A VIOLATION OF LAW FOR ANY PERSON, UNLESS THEY ARE ACTING UNDER THE DIRECTION OF A LICENSED PROFESSIONAL ENGINEER, ARCHITECT, LANDSCAPE ARCHITECT, OR LAND SURVEYOR, TO ALTER AN ITEM IN ANY WAY. IF AN ITEM BEARING THE STAMP OF A LICENSED PROFESSIONAL IS ALTERED, THE ALTERING ENGINEER, ARCHITECT, LANDSCAPE ARCHITECT, OR LAND SURVEYOR SHALL STAMP THE DOCUMENT AND INCLUDE THE NOTATION "ALTERED BY" FOLLOWED BY THEIR SIGNATURE, THE DATE OF SUCH ALTERATION, AND A SPECIFIC DESCRIPTION OF THE ALTERATION.

NEW YORK STATE OF OPPORTUNITY. Department of Transportation

PROJECT MANAGER R. SCHALLER
CHECK G. GROSS
DRAFTING B. SOKOL
CHECK G. GROSS
DESIGN S. FAIZI
JOB MANAGER G. GROSS
DESIGN SUPERVISOR N. DUENNEBACKE
FILE NAME = 581361_cpb_1030250_gen_note.dgn
DATE/TIME = 22-JUN-2021 11:32
USER = ggross

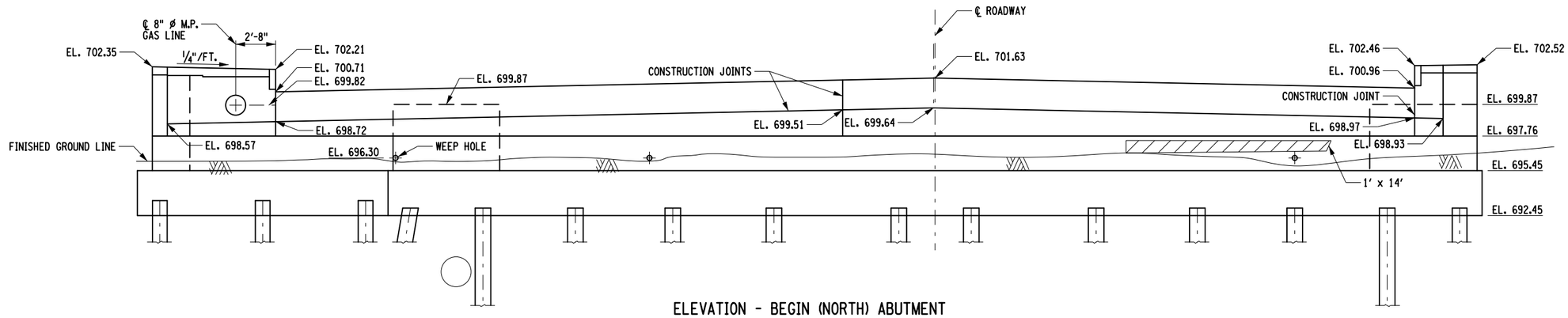

ELEVATION - BEGIN (NORTH) ABUTMENT

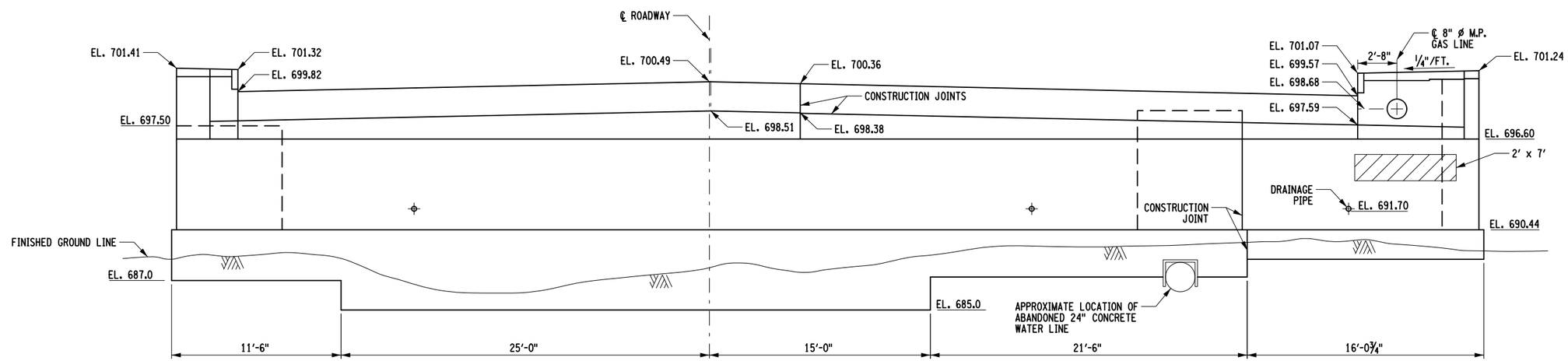

ELEVATION - END (SOUTH) ABUTMENT

KEY:

ITEM 582.06 - CLASS D REPAIR

4 0 4 8 12 16'

1/8" = 1'

AFFIX SEAL:
ON:

ALTERED BY:
ON:

STATE OF NEW YORK
GEOFFREY ROBERT GROSS
D264571
No. 079932
LICENSED PROFESSIONAL ENGINEER
June 16, 2021

AS-BUILT REVISIONS
DESCRIPTION OF ALTERATIONS:

TRANSIT ROAD, PART 4, SH1334-A-1
NY ROUTE 78, TRANSIT ROAD
BIN 1030250 & 1080550 OVER ELLICOTT CREEK
TOWNS OF CHEEKTOWAGA AND LANCASTER
COUNTY: ERIE REGION: 05

PIN 5813.61
NY RTE 78

BRIDGES
1030250

CULVERTS

ALL DIMENSIONS IN ft UNLESS OTHERWISE NOTED

ABUTMENT ELEVATIONS

N.Y. ROUTE 78
OVER
ELLICOTT CREEK

CONTRACT NUMBER
D264571

DRAWING NO. ST2-05
SHEET NO. 368

IT IS A VIOLATION OF LAW FOR ANY PERSON, UNLESS THEY ARE ACTING UNDER THE DIRECTION OF A LICENSED PROFESSIONAL ENGINEER, ARCHITECT, LANDSCAPE ARCHITECT, OR LAND SURVEYOR, TO ALTER AN ITEM IN ANY WAY. IF AN ITEM BEARING THE STAMP OF A LICENSED PROFESSIONAL IS ALTERED, THE ALTERING ENGINEER, ARCHITECT, LANDSCAPE ARCHITECT, OR LAND SURVEYOR SHALL STAMP THE DOCUMENT AND INCLUDE THE NOTATION "ALTERED BY" FOLLOWED BY THEIR SIGNATURE, THE DATE OF SUCH ALTERATION, AND A SPECIFIC DESCRIPTION OF THE ALTERATION.

NEW YORK STATE OF OPPORTUNITY. Department of Transportation

PROJECT MANAGER R. SCHALLER
CHECK G. GROSS
DRAFTING B. SOKOL
CHECK G. GROSS
DESIGN S. FAIZI
JOB MANAGER G. GROSS
DESIGN SUPERVISOR N. DUENNEBACKE

FILE NAME = 581361_cpb_1030250_abutment rehab.dgn
DATE/TIME = 16-JUN-2021 15:58
USER = ggross

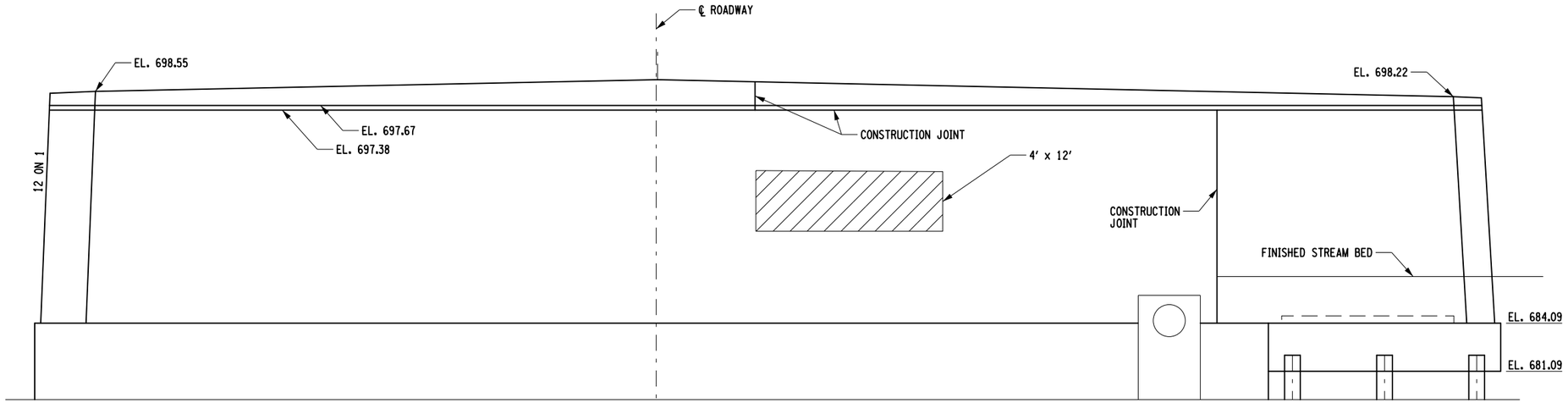

NORTH (BEGIN) ELEVATION

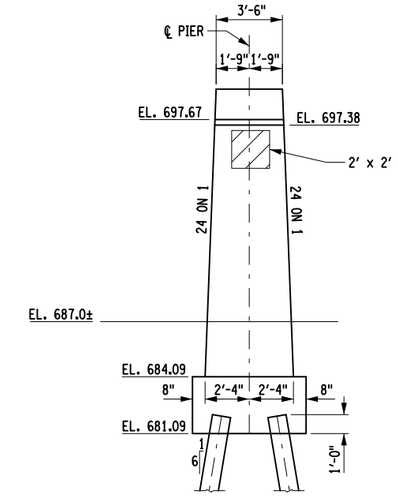

LEFT (EAST) ELEVATION

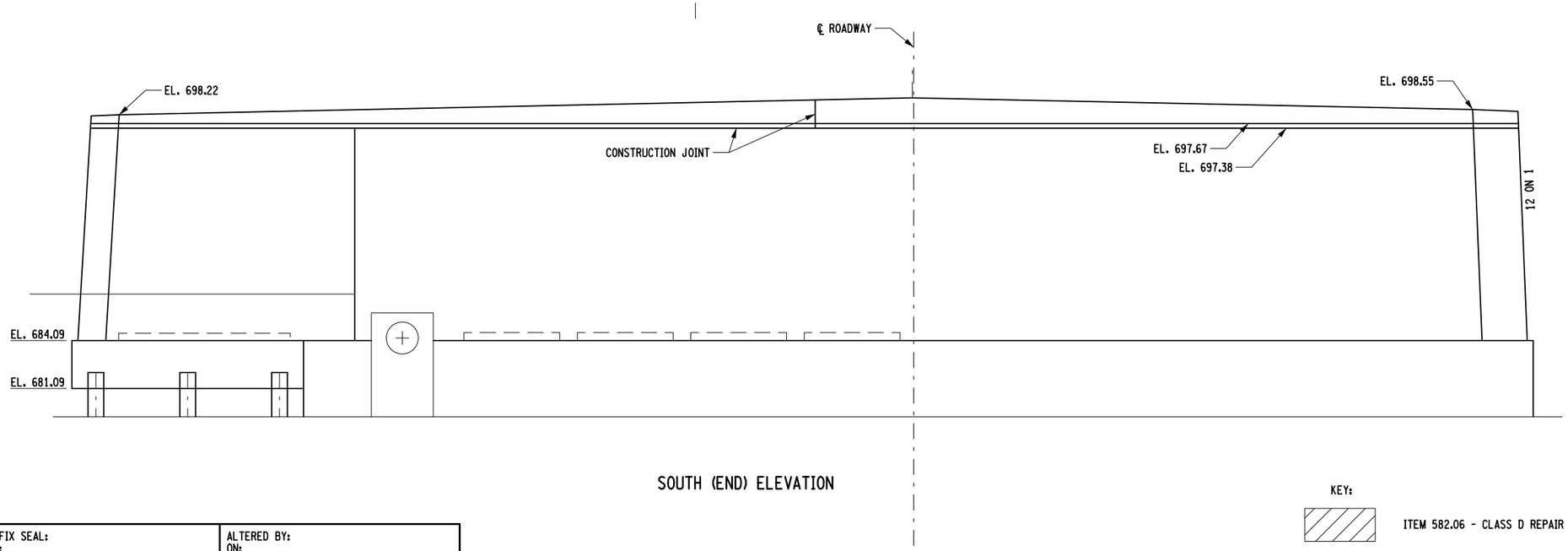

SOUTH (END) ELEVATION

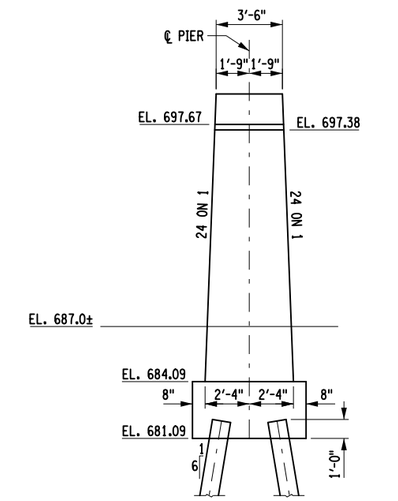

RIGHT (WEST) ELEVATION

KEY:

ITEM 582.06 - CLASS D REPAIR

4 0 4 8 12 16′

1/8" = 1′

AFFIX SEAL:
ON:

ALTERED BY:
ON:

AS-BUILT REVISIONS
DESCRIPTION OF ALTERATIONS:

TRANSIT ROAD, PART 4, SH1334-A-1	PIN 5813.61	BRIDGES	CULVERTS	ALL DIMENSIONS IN ft UNLESS OTHERWISE NOTED
NY ROUTE 78, TRANSIT ROAD	NY RTE 78	1030250		PIER ELEVATIONS
BIN 1030250 & 1080550 OVER ELLICOTT CREEK				N.Y. ROUTE 78 OVER ELLICOTT CREEK
TOWNS OF CHEEKTOWAGA AND LANCASTER				
COUNTY: ERIE REGION: 05				

CONTRACT NUMBER D264571

DRAWING NO. ST2-06

SHEET NO. 369

IT IS A VIOLATION OF LAW FOR ANY PERSON, UNLESS THEY ARE ACTING UNDER THE DIRECTION OF A LICENSED PROFESSIONAL ENGINEER, ARCHITECT, LANDSCAPE ARCHITECT, OR LAND SURVEYOR, TO ALTER AN ITEM IN ANY WAY. IF AN ITEM BEARING THE STAMP OF A LICENSED PROFESSIONAL IS ALTERED, THE ALTERING ENGINEER, ARCHITECT, LANDSCAPE ARCHITECT, OR LAND SURVEYOR SHALL STAMP THE DOCUMENT AND INCLUDE THE NOTATION "ALTERED BY" FOLLOWED BY THEIR SIGNATURE, THE DATE OF SUCH ALTERATION, AND A SPECIFIC DESCRIPTION OF THE ALTERATION.

NEW YORK STATE OF OPPORTUNITY. Department of Transportation

PROJECT MANAGER R. SCHALLER
CHECK G. GROSS
DRAFTING B. SOKOL
CHECK G. GROSS
DESIGN S. FAIZI
JOB MANAGER G. GROSS
DESIGN SUPERVISOR N. DUENNEBACKE

FILE NAME = 581361_cpb_1030250_pier.dgn
DATE/TIME = 16-JUN-2021 15:58
USER = ggross

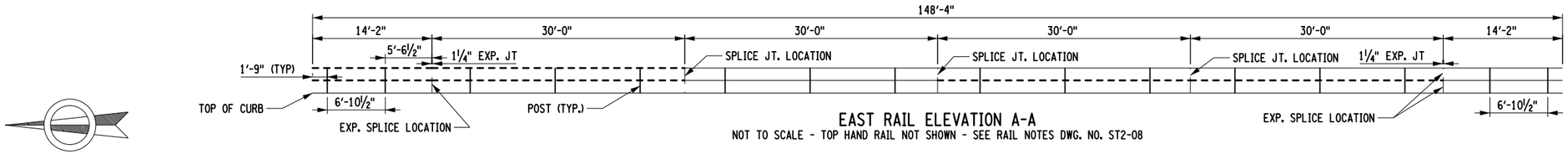

EAST RAIL ELEVATION A-A

NOT TO SCALE - TOP HAND RAIL NOT SHOWN - SEE RAIL NOTES DWG. NO. ST2-08

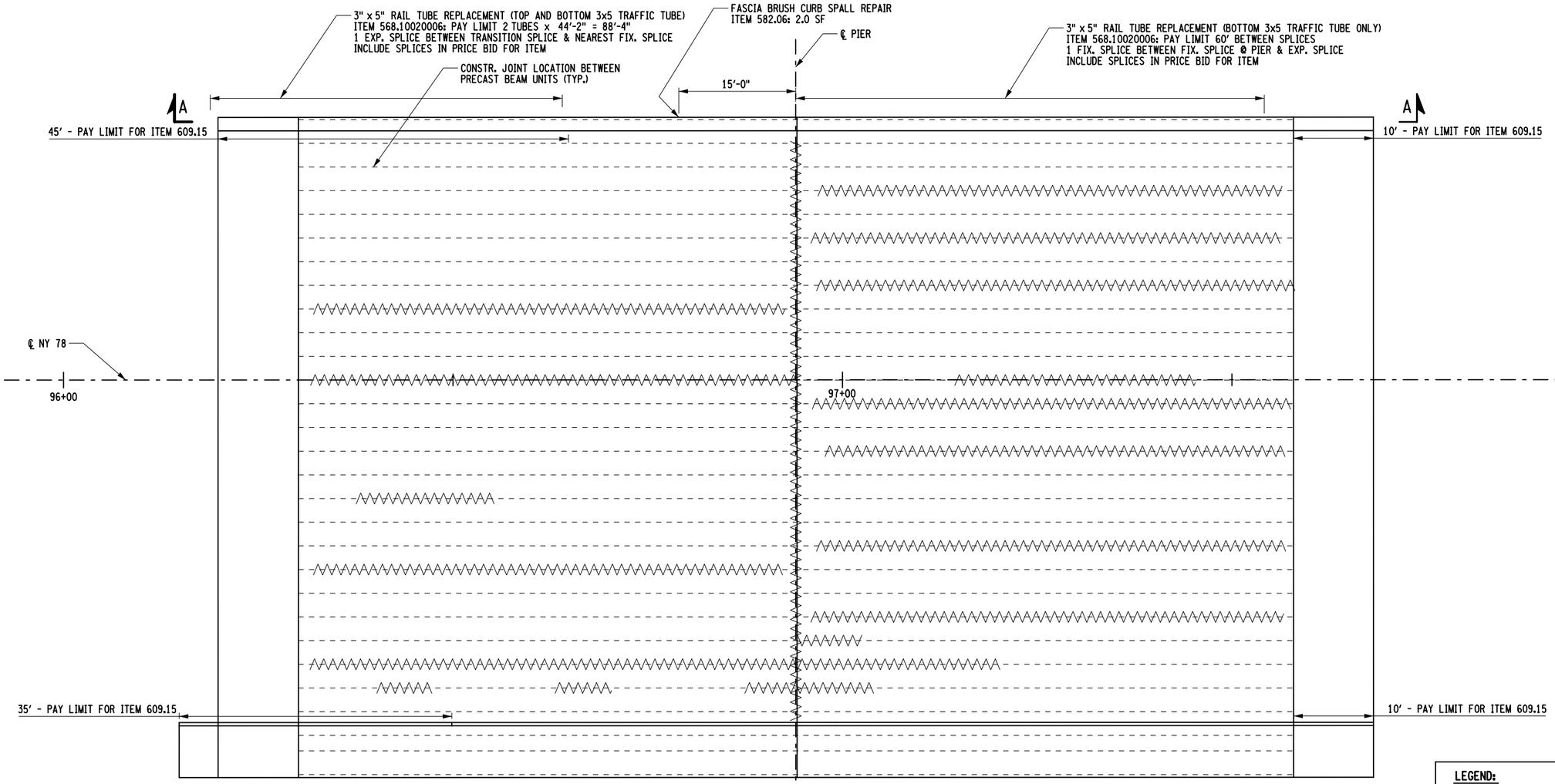

DECK PLAN - REHABILITATION

CRACK REPAIR, CURB REPLACEMENT & RAIL TUBE REPLACEMENT

5 0 5 10 15 20 25 30'

1" = 15'

LEGEND:

- - - - - RAIL TUBE TO BE REMOVED AND REPLACED (ITEM 568.10020006)

/\/\/\/\ APPROX. CRACK REPAIR LOCATIONS ITEM 557.25000016

AFFIX SEAL: ON:	ALTERED BY: ON:

STATE OF NEW YORK · GEOFFREY ROBERT GROSS · EXCELSIOR · D264571 · No. 079932 · LICENSED PROFESSIONAL ENGINEER

June 23, 2021

AS-BUILT REVISIONS
DESCRIPTION OF ALTERATIONS:

TRANSIT ROAD, PART 4, SH1334-A-1	PIN 5813.61	BRIDGES	CULVERTS	ALL DIMENSIONS IN ft UNLESS OTHERWISE NOTED
NY ROUTE 78, TRANSIT ROAD	NY RTE 78	1030250		SUPERSTRUCTURE & APPROACH SLAB PLAN
BIN 1030250 & 1080550 OVER ELLICOTT CREEK				N.Y. ROUTE 78 OVER ELLICOTT CREEK
TOWNS OF CHEEKTOWAGA AND LANCASTER				
COUNTY: ERIE REGION: 05				

CONTRACT NUMBER D264571

DRAWING NO. ST2-07

SHEET NO. 370

IT IS A VIOLATION OF LAW FOR ANY PERSON, UNLESS THEY ARE ACTING UNDER THE DIRECTION OF A LICENSED PROFESSIONAL ENGINEER, ARCHITECT, LANDSCAPE ARCHITECT, OR LAND SURVEYOR, TO ALTER AN ITEM IN ANY WAY. IF AN ITEM BEARING THE STAMP OF A LICENSED PROFESSIONAL IS ALTERED, THE ALTERING ENGINEER, ARCHITECT, LANDSCAPE ARCHITECT, OR LAND SURVEYOR SHALL STAMP THE DOCUMENT AND INCLUDE THE NOTATION "ALTERED BY" FOLLOWED BY THEIR SIGNATURE, THE DATE OF SUCH ALTERATION, AND A SPECIFIC DESCRIPTION OF THE ALTERATION.

NEW YORK STATE OF OPPORTUNITY. Department of Transportation

PROJECT MANAGER R. SCHALLER
CHECK G. GROSS
DRAFTING B. SOKOL
CHECK G. GROSS
DESIGN S. FAIZI
JOB MANAGER G. GROSS
DESIGN SUPERVISOR N. DUENNEBACKE

FILE NAME = 581361_cpb_1030250_deck repairs.dgn
DATE/TIME = 22-JUN-2021 11:41
USER = ggross

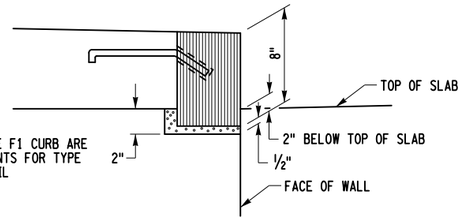

NOTE: DIFFERENCES FROM TYPE F1 CURB ARE SHOWN, ALL OTHER REQUIREMENTS FOR TYPE F1 CURB APPLY TO THIS DETAIL

SECTION OF GRANITE CURB - TYPE G1
BRIDGE U-WALL LOCATION (ITEM 609.15)
NOT TO SCALE

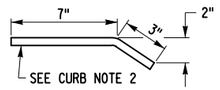

REPLACEMENT ANCHOR BAR
NOT TO SCALE

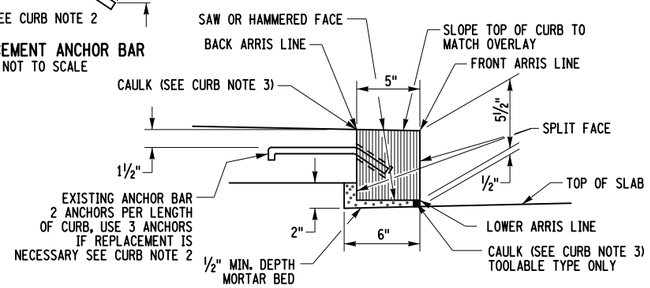

CURB NOTES:

1. BROKEN SEGMENTS OF CURBING SHALL BE REPLACED WITH NEW CURB, INCLUDE PRICE OF NEW CURB IN PRICE BID FOR ITEM 609.15 IN BRIDGE SHARE. ANTICIPATED LOCATION WHERE EXISTING CURB CANNOT BE REUSED: NORTHWEST QUADRANT (APPROX. LENGTH 35').

2. DAMAGED OR OTHERWISE UNSUITABLE ANCHORS TO BE CUT FLUSH OR REMOVED AND REPLACED WITH DRILL AND GROUTED REPLACEMENT ANCHOR BARS PER REQUIREMENTS OF ITEM 586.0201 (CHEMINCAL CURE TYPE WITH ABILITY TO SET IN ONE WORK SHIFT) OR AOBE WITH COST INCLUDED IN PRICE BID FOR CURB RESET ITEM.

A. ½" DIA. BAR SHALL CONFORM TO SPEC. § 709-07 AND GALVANIZED IN ACCORDANCE WITH SPEC. § 719-01. 40 ksi STEEL MAY BE USED IN LIEU OF 60 ksi OR 75 ksi STEEL. COST SHALL BE INCLUDED IN PRICE BID FOR THE CURB ITEM.

B. CURB ANCHORS SHALL BE INSERTED INTO HOLES DRILLED IN THE REAR FACE OF THE STONE CURB. THE HOLES SHALL BE THOROUGHLY CLEANED AND FILLED WITH CONCRETE GROUTING MATERIAL CONFORMING TO SPEC. § 701-05, IMMEDIATELY BEFORE PLACING THE CURB ANCHOR. THE CURB ANCHORS SHALL BE SECURELY SUPPORTED IN POSITION UNTIL THE GROUT HAS HARDENED. THE COST SHALL BE INCLUDED IN THE PRICE BID FOR THE CURB ITEM.

3. CAULKING COMPOUND FOR STRUCTURES SHALL CONFORM TO SPEC § 705-06.

4. CURBING SHALL BE REMOVED AND RESET IN ONE WORK SHIFT OR AOBE. IF REMOVAL AND STORAGE IS NECESSARY (UNABLE TO RESET IN ONE SHIFT), THE COST OF STORAGE AND MEASURES NECESSARY TO PROTECT TRAFFIC FROM FEATURES THAT MAY SNAG ERRANT TRAFFIC SHALL BE INCLUDED IN PRICE BID FOR ITEM 609.15 (MEASURES TO PROTECT TRAFFIC RELATED TO MISSING CURB SHALL BE AOBE).

SECTION OF GRANITE BRIDGE CURB - TYPE F1
BRIDGE DECK LOCATION (ITEM 609.15)
NOT TO SCALE

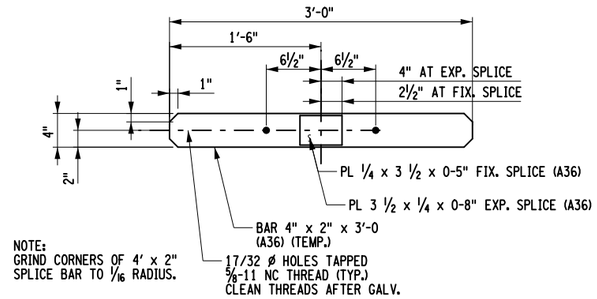

NOTE:
GRIND CORNERS OF 4' x 2" SPLICE BAR TO 1/16 RADIUS.

TRAFFIC RAIL SPLICE
NO SCALE - SEE RAIL NOTE

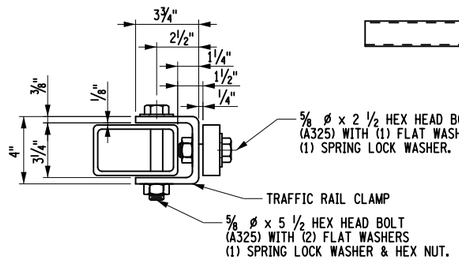

SECTION C-C
NO SCALE - SEE RAIL NOTE

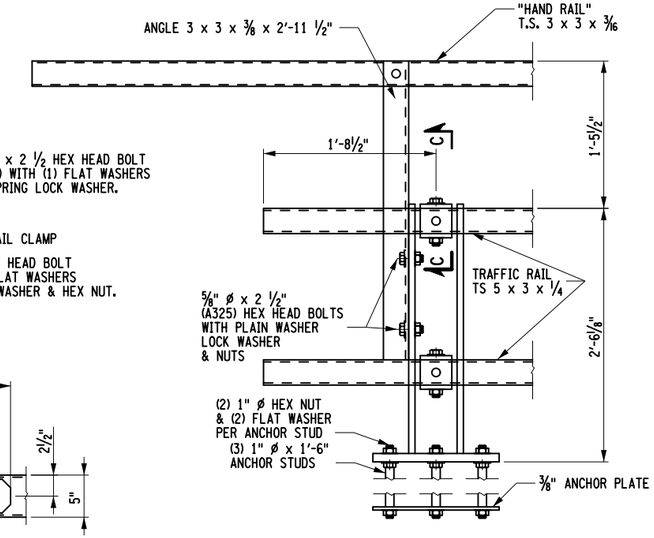

END RAIL ASSEMBLY
NO SCALE - SEE RAIL NOTE

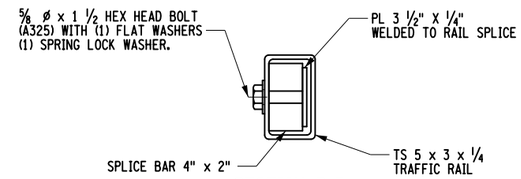

SECTION B-B
NO SCALE - SEE RAIL NOTE

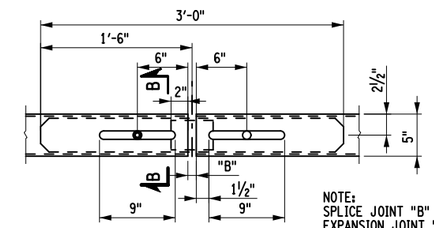

NOTE:
SPLICE JOINT "B" = 1"
EXPANSION JOINT "B" =WIDTH OF IN SLAB + ¼" (1" MIN.)

NOTE:
USE (2) BOLTS AT ALL SPLICE LOCATIONS EXCEPT AT WHERE EXP SPLICE WHERE ONLY (1) BOLT IS USED

TRAFFIC RAIL SPLICE JOINT ASSEMBLY
NO SCALE - SEE RAIL NOTE

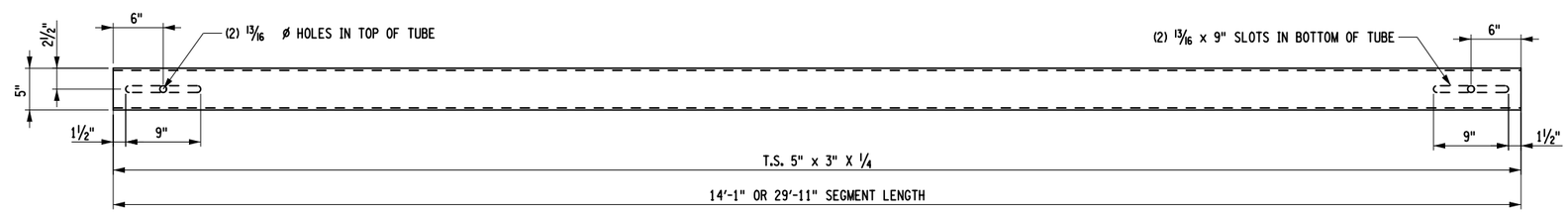

TRAFFIC RAIL
NO SCALE - SEE RAIL NOTE

RAIL NOTES:

1. BRIDGE RAIL DETAILS SHOWN ARE FOR ESTIMATING PURPOSES AND REFERENCE ONLY. WHEN PREPARING SHOP DRAWINGS FOR TUBE REPLACEMENT UNDER ITEM 568.10020006, REFER TO FIELD MEASUREMENTS AND INFORMATION SHOWN ON RECORD PLAN SHOP DRAWING (FIELD REVISION) SHEETS AVAILABLE IN SUPPLEMENTAL INFORMATION FOR BIDDERS (CONTRACT D254088).

AFFIX SEAL:
ON:

ALTERED BY:
ON:

STATE OF NEW YORK · GEOFFREY ROBERT GROSS · LICENSED PROFESSIONAL ENGINEER · D264571 · No. 079932

AS-BUILT REVISIONS
DESCRIPTION OF ALTERATIONS:

TRANSIT ROAD, PART 4, SH1334-A-1	PIN 5813.61	BRIDGES	CULVERTS	ALL DIMENSIONS IN ft UNLESS OTHERWISE NOTED
NY ROUTE 78, TRANSIT ROAD	NY RTE 78	1030250		BRIDGE RAIL AND MISCELLANEOUS DETAIL
BIN 1030250 & 1080550 OVER ELLICOTT CREEK				N.Y. ROUTE 78 OVER ELLICOTT CREEK
TOWNS OF CHEEKTOWAGA AND LANCASTER				
COUNTY: ERIE REGION: 05				

CONTRACT NUMBER D264571
DRAWING NO. ST2-08
SHEET NO. 371

IT IS A VIOLATION OF LAW FOR ANY PERSON, UNLESS THEY ARE ACTING UNDER THE DIRECTION OF A LICENSED PROFESSIONAL ENGINEER, ARCHITECT, LANDSCAPE ARCHITECT, OR LAND SURVEYOR, TO ALTER AN ITEM IN ANY WAY. IF AN ITEM BEARING THE STAMP OF A LICENSED PROFESSIONAL IS ALTERED, THE ALTERING ENGINEER, ARCHITECT, LANDSCAPE ARCHITECT, OR LAND SURVEYOR SHALL STAMP THE DOCUMENT AND INCLUDE THE NOTATION "ALTERED BY" FOLLOWED BY THEIR SIGNATURE, THE DATE OF SUCH ALTERATION, AND A SPECIFIC DESCRIPTION OF THE ALTERATION.

NEW YORK STATE OF OPPORTUNITY. Department of Transportation

PROJECT MANAGER R. SCHALLER
CHECK G. GROSS
DRAFTING B. SOKOL
CHECK G. GROSS
DESIGN S. FAIZI
JOB MANAGER G. GROSS
DESIGN SUPERVISOR N. DUENNEBACKE

FILE NAME = 581361_cpb_1030250_msc_details.dgn
DATE/TIME = 16-JUN-2021 15:58
USER = ggross